113
125
THS

A GRADE SEPARATION FOR SHEPARD STREET AND PERE MARQUETTE RAILROAD LANSING, MICH.

THESIS FOR THE DEGREE OF B. S.

Nelson C. Jones
Clifford I. Denton

1931

THESIS

cop. 1

Railroads – Crossings
Title: Grade separation

Wagenwood & Co.

A GRADE SEPARATION

FOR

SHERIDAN STREET AND PERE MARQUETTE RAILROAD

Lansing, Mich.

A Thesis Submitted to

The Faculty

of

Michigan State College

of

Agriculture and Applied Science

by

Nelson C. Jones and Clifford I. Denton

Candidates for Degrees

of

Bachelor of Science

June 1931

APPRECIATION

We wish to express our appreciation for the advice, directions and criticisms of Professors C. L. Allen and C. H. Miller concerning the problem we encountered.

Nelson C. Jones Clifford I. Denton

100214

INDEX

	Page
THE PROPOSED PROJECT ----------	5
SURVEY ----------	6
DESIGN ----------	7
Superstructure ----------	7
Abutment ----------	9
Wing Wall ----------	16
Grade ----------	21
COST ESTIMATE ----------	22
CONCLUSION ----------	23

THE PROPOSED PROJECT

At the present time, with automobiles becoming more and more numerous, grade separations are essential in eliminating accidents and traffic holdups. While at present a separation at the intersection of Shepard Street and the Pere Marquette Railroad is not necessary, we think that it will be in the near future, due to the fact that trains cross the street at high speeds and at a considerable angle to it. Also the topography of the ground is such that it is impossible to see but a short distance in either direction.

The site is of a nature that would make the elevation of the railroad very expensive, while the raising of the street would be comparatively easy. For this reason we propose to raise the street above the railroad grade, securing all of the necessary clearance in this manner.

SURVEY

A point on the center-line of Shepard Street was definitely located from a section corner and used as a point of beginning for our survey. The line was run down the center of Shepard Street, using nails and washers to mark the stations.

Buildings, trees, and other topographic features were carefully located to insure maximum accuracy in the final computations.

Profiles of Shepard Street, the railroad, and Shields were taken, using a convenient concrete corner post for a bench mark with an assumed elevation of 500.00 feet. The work was later checked by means of another bench mark, namely a fire hydrant, on the other end of the line.

Cross-sections were taken of Shepard Street and Shields Avenue at every one-hundred foot station, and at all breaks in grade.

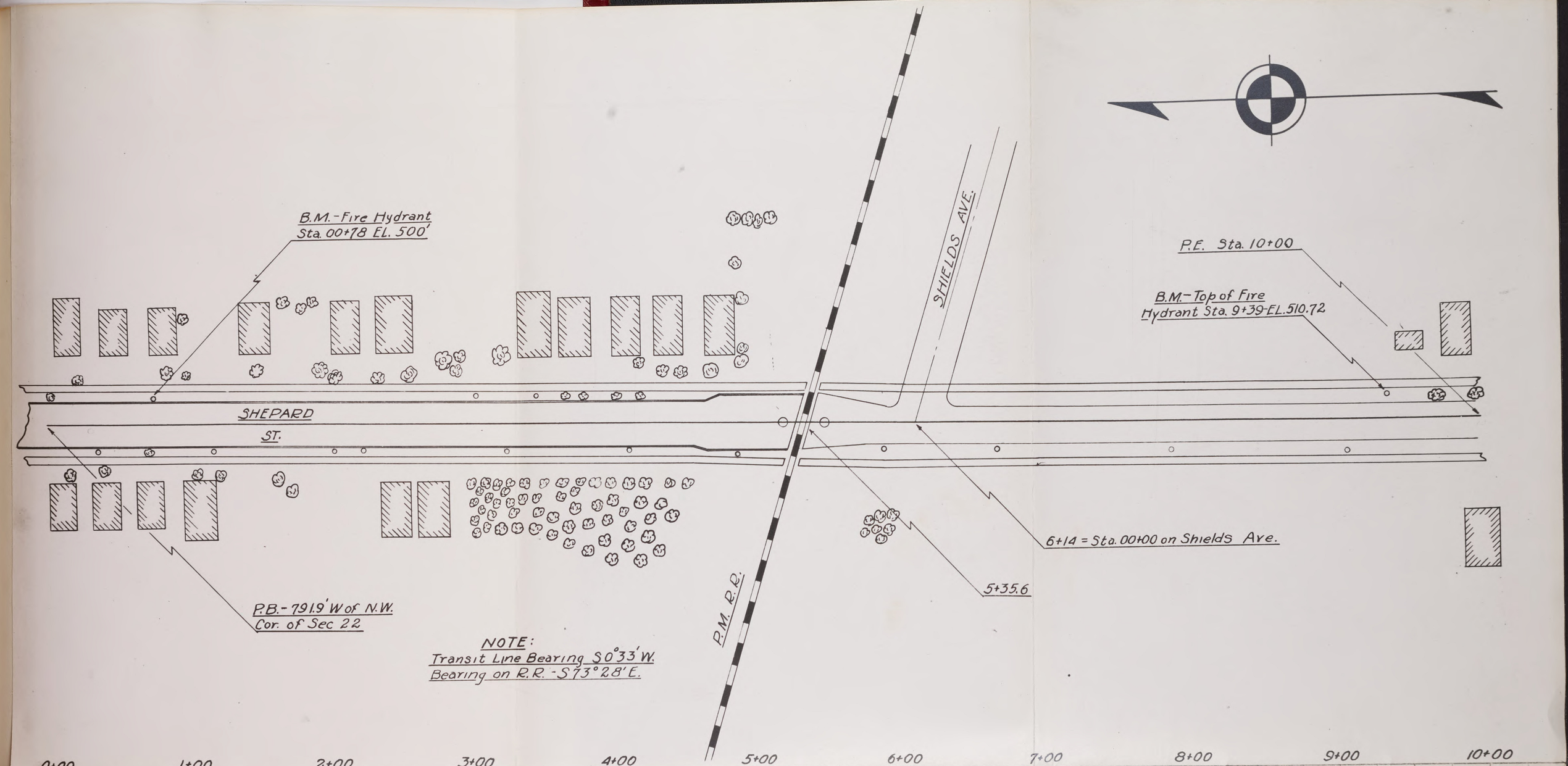

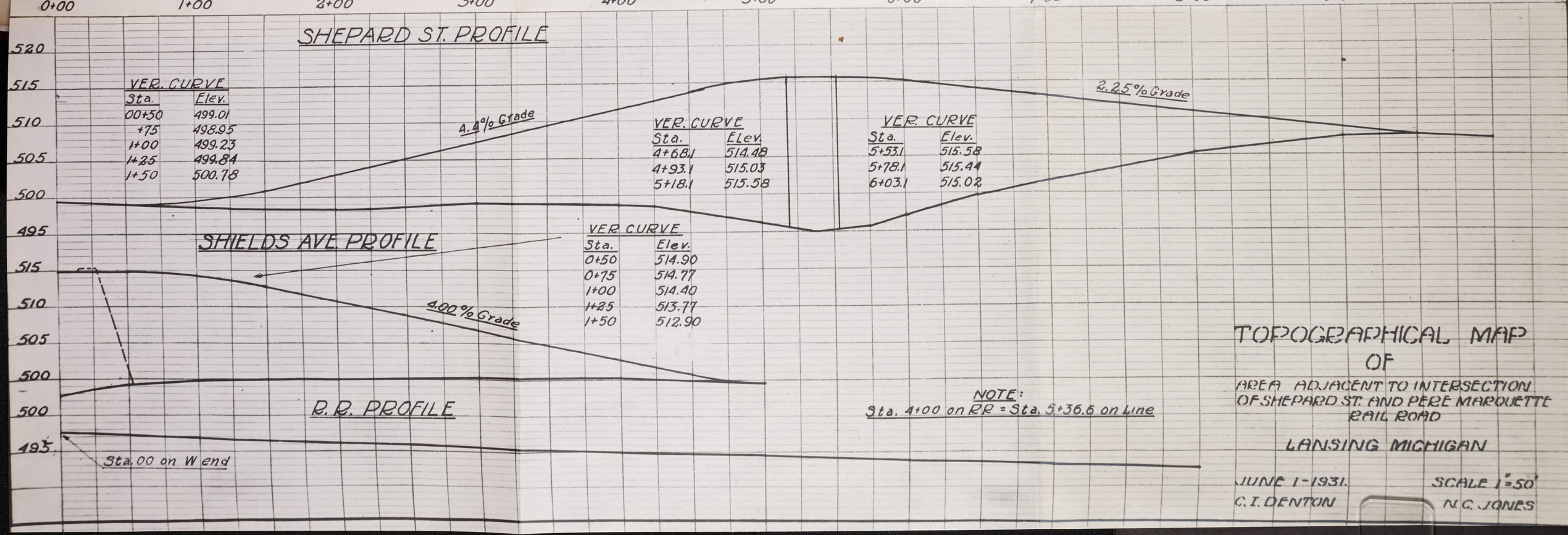

TOPOGRAPHICAL MAP OF

AREA ADJACENT TO INTERSECTION OF SHEPARD ST. AND PERE MARQUETTE RAIL ROAD

LANSING MICHIGAN

JUNE 1-1931. SCALE 1"=50'

C. I. DENTON N. G. JONES

DESIGN

Super-structure.

As the Michigan State Highway specifications give the size and weight of girders for this type of structure, we used these specifications in our design.

To obtain the necessary lateral clearance it was necessary, due to the angle of crossing, to use a 35 foot span. As the street was 30 feet wide, we used a thirty foot roadway over the bridge, with five-foot sidewalks on each side.

The most economical type of super-structure seemed to be the slab and girder, and so this was used.

Then, from the specifications we determined the following,

Inside Girders	21 inch 92 lb. Carnegie I-Beams spaced at 4 ft. 8 inches.
Outside Girders	21 inch 98 lb. Carnegie I-Beams spaced at 4 ft. 11 inches.

This gives a total width of 42 ft. 6 inches between outside girders, which was ample for our purpose. The paving slab was taken as 6 inches thick, with standard Michigan State Highway reinforcement. The sidewalk was made of concrete slabs 14 inches thick, giving a curb on the bridge of 11 inches. The wearing surface was 5 inches

thick at the center and 3 inches thick at the curb, the crown being of parabolic form.

The fascia details and balustrade were according to Michigan State Highway Standards.

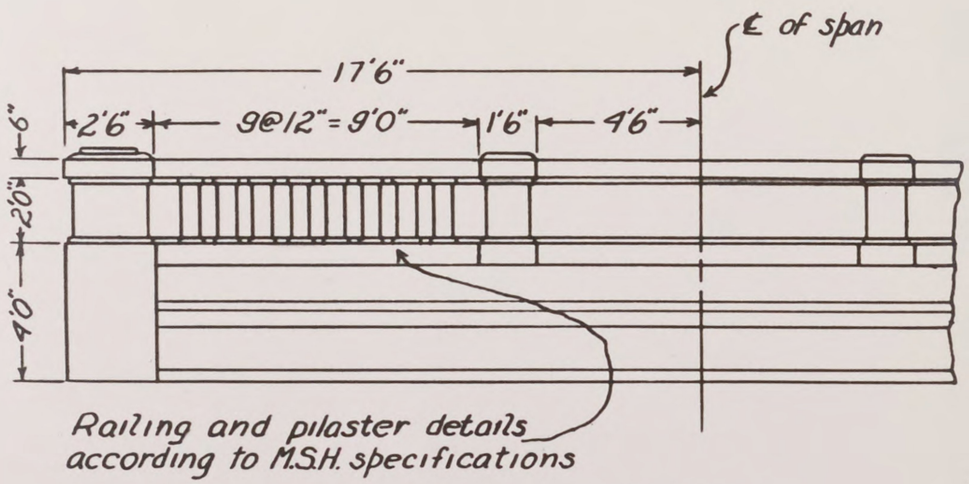

PART ELEVATION

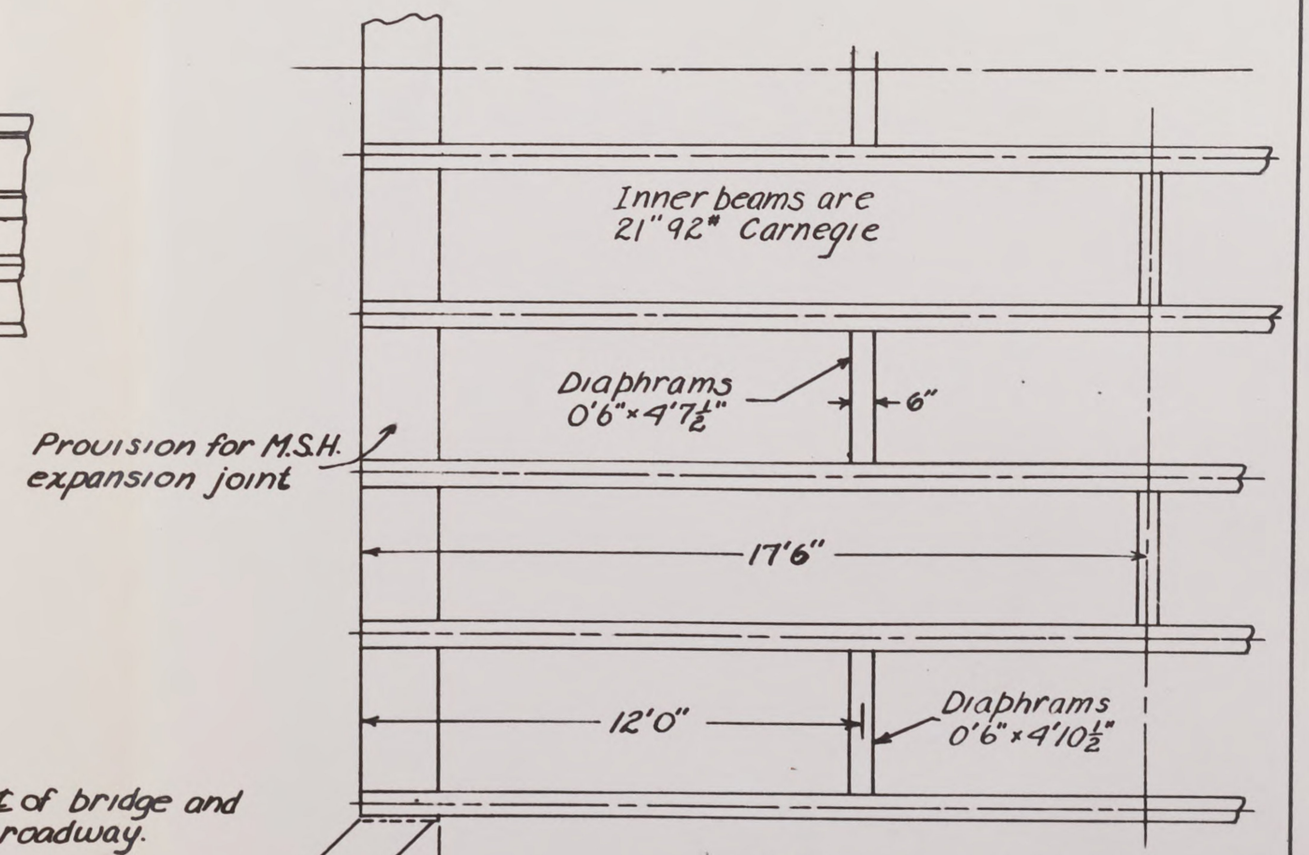

PART PLAN

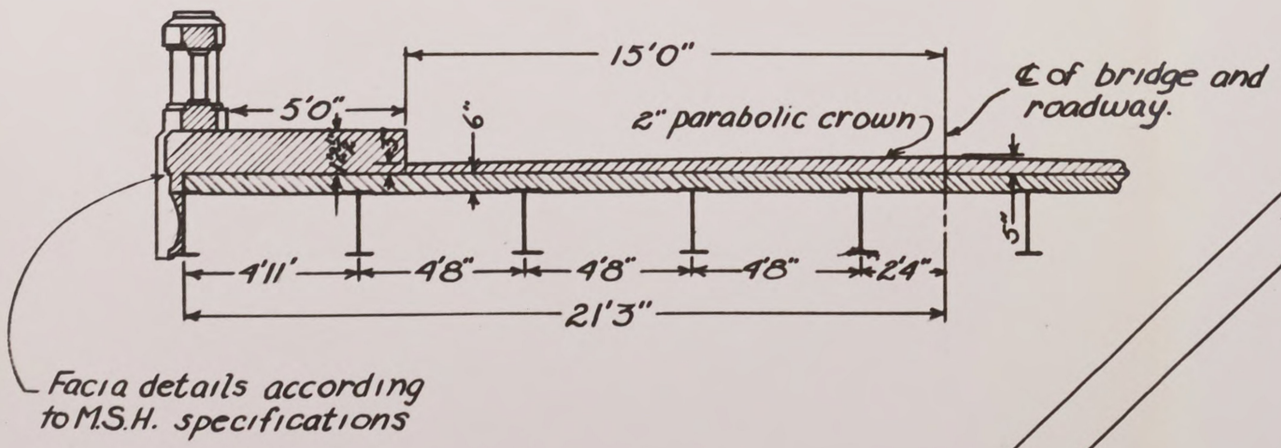

CROSS SECTIONAL VIEW

NOTE: REINFORCEMENT IN THE FLOOR-SLAB, PAVING SLAB AND RAILING PER M.S.H. SPECIFICATIONS

SUPERSTRUCTURE DETAILS

SCALE 1" = 5'0"

Abutments.

Specifications-

Allowable soil pressure	= 5000 lbs.
Coefficient of friction of concrete on earth	= .6
Wt. of earth	= 100 lbs per Cu. ft.
Wt. of concrete	= 150 lbs per Cu. ft.
Sg. fluid wt.	= 25 lbs per Cu. ft.
Concrete	= 1500 lbs per Sq. in.
fc	= 600
fs	= 16,000
Unit bond stress (u) plain	= 60 lbs per sq. in.
For deformed bars	= 75 lbs per sq. in.
Unit shear	= 30 lbs.
n	= 15

18 feet allowed for clearance

5 inches allowed for expansion joint

(W.S.H. specifications)

Depth to bottom footing = 4 ft.

16 inch counterforts spaced 8 ft. on centers will be used.

Height-

(4 ft. + 18 ft.) - 5 inches = 21 ft. 7 in.

Dead Load

Railing detail 325 lbs x 35 x 2 = 22,750 lbs.

Deck Slab 42.5 ft x 35 ft x 15/24 x 150 lbs = 120,855 lbs.

Paving Slab 30 ft x 35ft x 1/3ft x 150 lbs = 52,500 lbs.

Sidewalk 6.75 ft x 35 ft x 150 lbs = 35,400 lbs

Girders 8 x 35 x 92 + 2 x 35 x 93 = 32,720 lbs

Diaphrams 14 at 2 cu.ft.= 14 x 2 x 150 = 4,200 lbs.

TOTAL 268,525 lbs.

268,525/2 x 43.5 = 3086.5 lbs per Lineal Foot.

Live Load-

533 + (13 x 17.5) = 710 lbs per lineal foot

(U.S.H. specifications)

Vertical Wall

h = 21.58

From table Art. I Kool Vol. II

t/h = .24 Length of base = 14 ft.

Rise above footing = 19 ft 7 inches = 19.58 ft.

Pressure = 19.58 x 25 = 490 lbs/Sq.ft.

$M = w/^2/10$ Free span = 6.67

$M = \frac{490 \times 6.67}{10} = 2180$ ft.lb/foot of width

$d = \sqrt{\frac{2180}{94}} = 4.8$

Then the 1 ft. 6 in. in Highway specifications is safe.

Then As = .0067 x 12 x 8 in.= .64 sq. in./foot width.

Spacing at 1/4 ht. 8 x 4/3 = 8 inches, at 1/2 ht.

6x2 = 12 inches.

Then 5/8 in ø bars spaced 6 inches would be used.

Short rods will be introduced to take care of negative moment at counterforts.

53 1/2 x 1/2 = 27 inches on each side counterforts.

$V = 4[illegible]0 \times (4.00 - .67) = 1635$ lbs.

Then assuming 5/8 inch Ø bars spaced 6 inches ℄-℄

$$U = \frac{1635}{18/6 \times 1.[illegible]5 \times .[illegible]3 \times [illegible]} = 5[illegible] \text{ lb/sq. in. (o.i.)}$$

$$\text{Unit shear} = \frac{1635}{1[illegible] \times .[illegible]3 \times [illegible]} = 1[illegible] \text{ lb/sq. in (o.i.)}$$

$W = 3[illegible]00 + ([illegible].6 \times 19.58 \times 100) + 4200 + 4410$

$= 3[illegible]00 + 1[illegible]330 + 4200 + 4410 = 29340$

$M = 3810 \times 4.65 + [illegible].7 \times 16830 + 4200 \times 7$

$= 37,800 + 1[illegible],[illegible] + 29,400 = 23[illegible],600$

$$\frac{230,4[illegible]0}{29,340} = 7.88 \text{ ft}$$

P = 5900 at 7.19 ft

2[illegible],340 is to 7.1[illegible] = 5[illegible]00 is to x

[illegible],340 x = 42,400

x = 1.45 Then the resultant cut

the base at (7.[illegible]8 + 1.45)= [illegible].[illegible]3 ft. from end.

x = [illegible].[illegible]3 W = 29,340 + = 14

$$p_1 = \frac{[illegible],340}{14} + \frac{29,340 \times [illegible].[illegible]3}{7 \times 7} = 2100 + 2100 = 4200$$

$p_2 = 2100 - 2100 = 000$ lbs.

14 is to 4200 = 1 is to x

14 x = 4200

x = 300

Inner floor slab.

Consider 1 foot strip.

Upward pressure = $\frac{u + 300}{2}$ = 150 lbs.

lbs. earth and footing are 19.58 x 1 x 100 = 1958 lbs.

2 x 1 x 150 = 300 lbs.

Uniform load on end strip = 2258 - 300 = 1958 lbs.

$M = \frac{1958 \times 6.67^2}{10} = 8,720$ ft. lbs.

$d = \sqrt{\frac{8720}{54.4}} = 9.6$ Total depth 14 inches.

Total shear at edge = 1958 x (4.00 - .67) = 6545 lbs.

d (from shear) = $\frac{6545 \text{ lbs.}}{12 \times .40 \times 60}$ = 20 in. (total depth 24 inches)

Bottom rods.

$K = \frac{8720}{20} = 21.8$

$p = \frac{21.8}{18,000 \times .90} = .0015$

As = .0015 x 12 x 20 = .364 sq. in.

3/4 Ø 12 inches on ℄

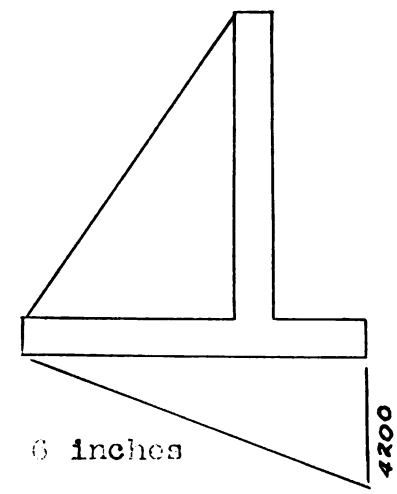

On supports

Spacing = $\frac{75 \times 12 \times 2.36 \times .9 \times 20}{6525}$ = 6 inches

Slab uniform thickness

Unit load decreases $\frac{4200}{14}$ = 300 lb/ft

At 2 ft from end unit load = 1658 lbs.

Req'd spacing Top rods = $\frac{6 \times 1958}{1658}$ = 7 inches

Req'd spacing Bottom rods = $\frac{12 \times 1958}{1658}$ = 14 inches

At 4 ft. from end. Unit load = 1058

Req'd spacing top rods = $\frac{6 \times 1958}{1058}$ = 11 inches

Req'd spacing bottom rods = $\frac{12 \times 1958}{1058}$ = 22 inches

From this point on use 13 inch_____ (limit)

Length of Top Rods

$p = \frac{.44}{6 \times 20} = .00366$

$j = .907$

$fs = \frac{4720 \times 12}{.0036 \times .907 \times 12 \times 20^2} = 6,660$

$\frac{fl}{4u} = \frac{6,660 \times .75}{4 \times 75} = 16.6$ Use 21

$u = \frac{6595}{13 \times .907 \times 20} = 30$ lbs/sq. in. (O.K.)

Outer Cantilever

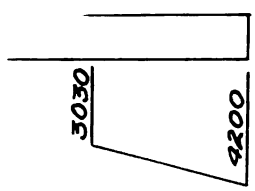

Length = 3.9

Soil pressure at stem = x

10.1 is to x = 14 is to 4200

14 x = 4200 x 10.1

Center of gravity

$3.9 - \frac{3.9}{3} \times \frac{2 \times 3030 + 4200}{3030 + 4200} = 2.05$

$M = 3815 \times 3.9 \times 2.05 - 3.9 \times 3 \times 150 \times \frac{3.9}{2}$

$M = 29,190 - 2090 = 16,100$ ft. lbs.

$d = \sqrt{[illegible]/[illegible].4} = 16.9$ or 17 inches

As = .0067 x 12 x 16.9 = 1 sq. inch.

Use 7/8 inch round bars 6 inches on centers.

Total shear

V = ([illegible] x [illegible])-([illegible] x 8 x 150)

V = 14[illegible] - 1170 = 1[illegible],130

$d = \frac{1[illegible],130}{1[illegible] \times .9} = 4[illegible]$ inches (Total d = 4[illegible] inches)

Try 3/4 inch bars at six inches on centers.

$p = \frac{.442}{6 \times 40} = .00175$ j = .925

$u = \frac{12,930}{[illegible] \times .925 \times 40 \times 2.36} = 74$ (O.K.)

fs = [illegible]160 x 12/.00175 x .925 x 12 x 40^2 = 10,100 lbs per sq. in. (O.K.)

Length of embedment

$\frac{fi}{4u} = \frac{10,100 \times 3/4}{4 \times 75} = 35$ inches

Counterfort

Total force = 1/2 x [illegible] x 19.58^2 x 8 = 38,400 lbs.

$M = 38,400 \times \frac{19.58}{3} \times 12 = 3,010,000$ lb. in.

Allow 4 inches from center of steel to edge

Moment arm = 8.75 feet

K = 3,010,000 lb. inches.

As = 8.75 x 12 x 16 x .003 = 3.36 sq. in.

Use 5 lin. round bars.

Carry 2 rods to top.

$$y = 22.7 - \sqrt{\frac{[illegible] \times [illegible].7^2}{[illegible].6}} = 5.7 \text{ ft (U.S.H. Formula)}$$

Cut off two bars at 5.7 feet from base.

$$y_x = 22.7 - \sqrt{\frac{1.57 \times [illegible].7^2}{5.56}} = 7.2 \text{ feet}$$

Cut off one bar at 7.2 feet from base.

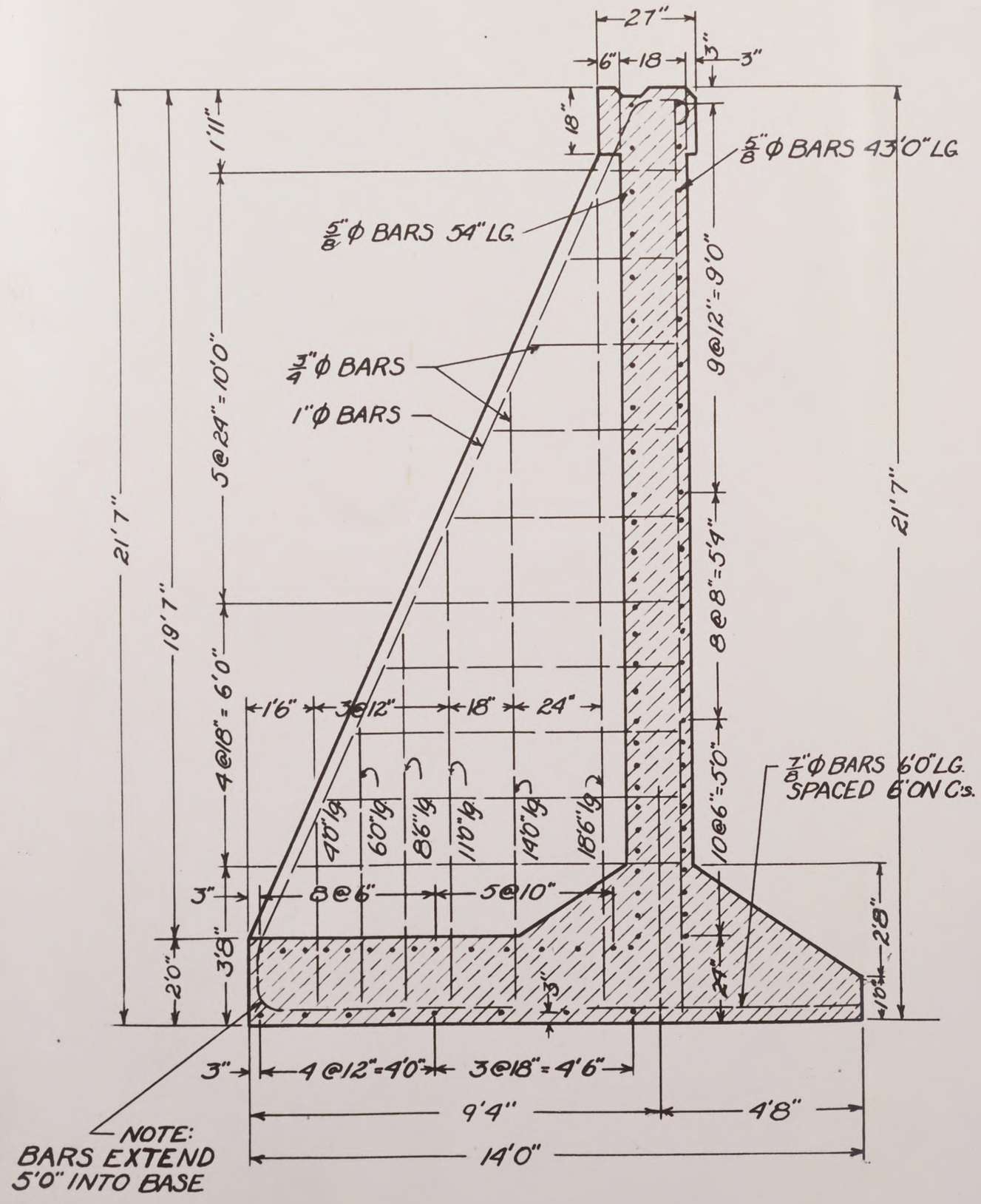

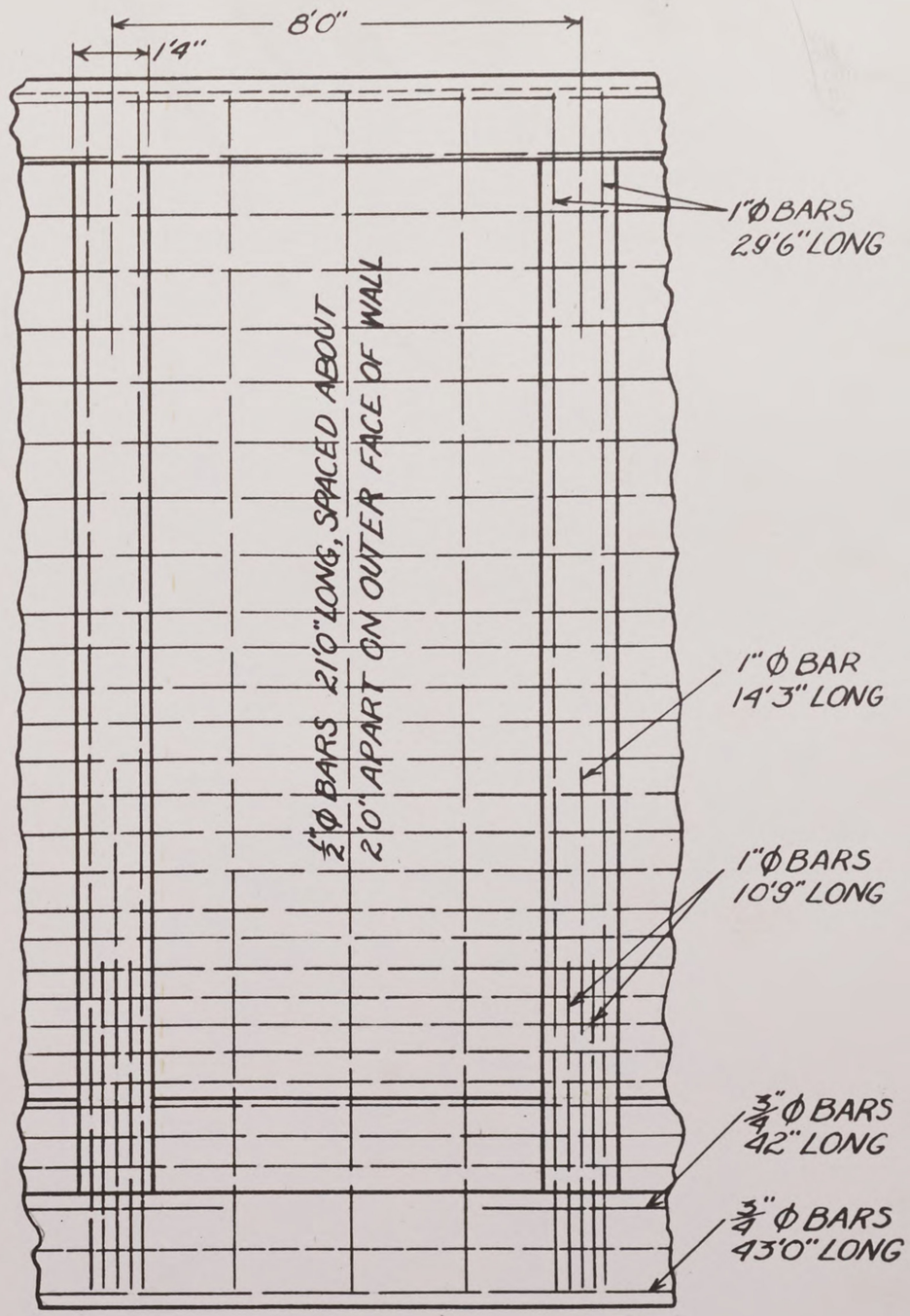

TOTAL LENGTH ABUTMENT = 43'6"

COUNTERFORT ABUTMENT

SCALE 1" = 3'0"

CANTILEVER RETAINING WALLS

Stem

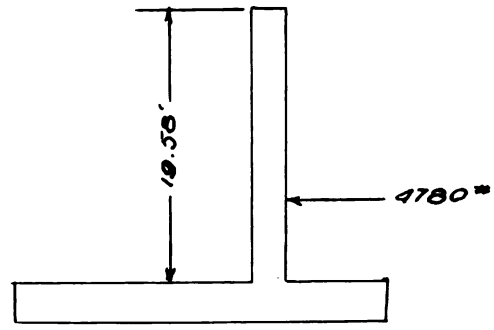

Thickness

$P = 1/2 \times 85 \times 19.58^2 = 4780$ lbs.

$M = 4780 \times 6.5 \times 12 = 375{,}000$ ft. lbs.

$d = \sqrt{\dfrac{375{,}000}{15.0 \times 12}} = 17.9$ inches

Wall is anchored into counterfort abutment and 5 feet in height. Therefore 18 inches is sufficient.

$p = .0068$ (Table V)

$As = .0068 \times 17.9 \times 12 = 1.47$ sq. in.

Use 7/8 ⌀ bars spaced 5 inches C-C placed, vertically along back of wall, at [illegible] 10 ft. below top of wall.

$M_{10} = 1/2 \times 85 \times 100 \times 3.33 \times 12 = 50{,}000$ lb.FT.

$K_{10} = 50{,}000/12 \times 17.9^2 = 13$

$P_{10} = 13/16{,}000 \times .9 = .00073$

$P_{10}/p = .0007/.0068 = .1324$ or 1/7. Therefore one out of seven bars need go up over 10 ft. from top of base, at a point 15 ft. below top of wall.

$M_{15} = 1/2 \times 85 \times 225 \times 15/3 \times 12 = 168{,}300$ lb. ft.

$P_{15} = 43.85/16{,}000 \times .9 = .00395$

$K_{15} = 168{,}300/12 \times 17.9^2 = 43.85$

P_{15}/p = .003/.0068 = .44 or 1/2 approx.

Therefore 1/2 of the bars may be cut off at a point 5 ft. above the top of the base.

Shear in stem.

Max. shear = 4780 lbs.

V = 4780/12 x 17.9 x .88 = 35.3 lbs/sq. in.

No stirrups necessary.

U = 4780/.88 x 17.9 x 12/5 x 1.25 = 53.3 lbs/sq.in.

Bond O.K.

Length for bond = 50 x 7/8 inches = 47 inches.

.4 of 1% hor. steel will be employed based on the cross section of concrete. Two thirds of this will be placed in front.

As = .004 x 12 x 18 = .865 or 3/4 ø bar at 6 inches C-C

Use 9 inch spacing in front and 18 inches in back.

Hooked in abutment with 3/4 inch x 50 = 38 inches for bond.

Footing.

W (Earth)	= 1[illegible].88 x 5.25 x 100	=	10,360
W (Stem)	=		4,400
W (Base)	= 9 x 2 x 150	=	2,700
	Sum of Wts.	=	17,360

Resultant acts at a dis.

$$\frac{1[illegible]60 \times 6.88 + 44,000 \times 3 + 2700 \times 4.5}{17,360} = 5.88 \text{ ft.}$$

from left end. And res. shear or Ver. and hor. force cuts the base at a distance-

$x = 5820 \times 7.19/1736 = 2.41$ ft.

$5.33 - 2.41 = 2.17$ ft. from left end. O.K.

fo. t. $= 5.33/2.41 = 1.24$ O.K.

Max. soil pressure $= 2 \times 17360/9 = 3858$ lbs. O.K.

fo.l $= 17360 \times .4/5820 = 1.19$ O.K.

Inner Cantilever

$V = 10,000 + 5.25 \times 2 \times 150 - 22.50/2 \times 5.25$

$V = 5,925$ lbs.

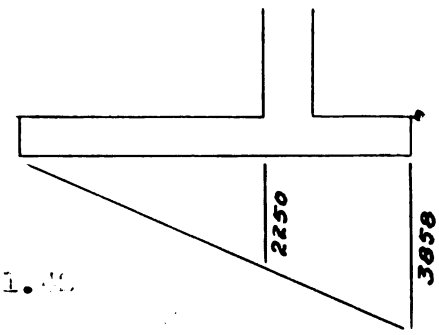

$M = (10860 + 1575) \ .62 - 5910 \times 1.75$

$M = 25,700 \times 12 = 272,000$ lb. in.

Min. d for steel by Com. is

$$\sqrt{\frac{272,000}{12 \times 12}} = 15.45 \text{ inches}$$

Depth to satisfy bond stress assuming

7/8 inch ϕ bars as in stem at 6 1/2 C-C

$d = 5,925 / \frac{12}{6.5} \times 2.25 \times 30 \times 7/8 = 20.4$ inches. Use 24 in.

O.K.

$p = \frac{.6}{6.5 \times 20.4} = .00453$ Table V gives J= .886

$u = 5925 \times 6.5/12 \times 2.25 \times .886 \times 20.4 = 79$ lbs/sq.in.

O.K.

$v = 5925/12 \times .886 \times 20.4 = 27.3$ O.K.

No stirrups necessary.

fs = 272,000/.00453 x .886 x 12 x 20.4 = 13,550/sq.in.

O.K.

Length of imbedment necessary to prevent slipping =

13,550 x 7/8 / 4 x 80 = 37 inches.

Taper in Cantilever.

V_s= 80 x 12/6.5 x 2.25 x .886 x 20.4 = 6000 lbs.

V_1 (1.25 ft. from stem) Earth p = 4 x 3858/9 = 1715 lbs.

V_1= 100 x 4 x 19.53 + 2 x 4 x 150 - 1715 x 4/2= 5600 lbs.

V_2= (2.25 ft. from stem) Ep = 3858 x 3/9 = 1286 lbs.

V_2= 100 x 3 x 19.53 + 3 x 2 x 150 - 1286 x 3/2 = 4343 lbs.

V_3= (3.25 ft. from stem) Ep = 3858 x 2/9 = 858 lbs.

V_3= 100 x 2 x 19.53 + 3 x 2 x 150 - 858 x 1 = 3658 lbs.

V_4(4.25 ft. from stem) Ep = 3858 x 1/9 = 428.5 lbs.

V_4= 1 x 19.53 x 100 + 1 x 2 x 150 - 428 x 1/2 = 2044 lbs.

V_c= for 12 inches at end = 80 x 12/6.5 x 2.25 x .886 x 9

V_c= 2655 lbs.

To 12 inches at End.

Other Cantilever

Wt. = 2.25 x 150 x 2 = 675.0 lbs.

M = (2890 x 2.25 x 2.25/2 + 968 x 2.25/2 x 2.25 x 2/3 -

675 x 2.25 x 1/2) 12

M = 274,000 inch lbs.

Depth of steel for M = $\sqrt{\frac{274,000}{12 \times 95}}$ = 15.5 inches

$V = \frac{(5258 + 4290)}{2} \times 2.25 - 2.25 \times 2 \times 150$

$V = 6935$

$As = 12 \times .0063 \times 15.5 = 1.235$ or 1.27 sq. in.

If bars in stem are bent to take this reinforcing there will be more than enough steel.

(1.36 sq.in. in stem.)

Allowed bond stress $= 6125/\frac{12}{5} \times .25 \times 30 \times 7/8 = 19$ inches.

21 inches used.

$p = 12 \times .6/5 \times 12 \times 19 = .0063$ $\quad j = .883$

$u = 6935 \times 5/12 \times 2.25 \times .883 \times 19 = 76.5$ O.K.

$fs = 274,000/.0063 \times .883 \times 12 \times 19^2 = 11,330$

Length of imbedment $= 11,330 \times 7/8 /4 \times 80 = 51$ inches.

$v = 6125/12 \times .883 \times 19 = 30.3$ O.K.

No stirrups necessary.

Taper

$V_s = 30 \times 12/5 \times 1.25 \times .883 \times 19 = 7240$

$V_1 = (1.15$ ft. from stem$)$ $\quad Mp = 3353 \times 9/9 = 3430$

$V_1 = 3430 + 433 \times 1/2 - 1 \times 150 \times 1.5 = 3419$ lbs.

$V_e = 30 \times 12/5 \times 1.25 \times .883 \times 9 = 3430$ lbs.

To 12 inches at End.

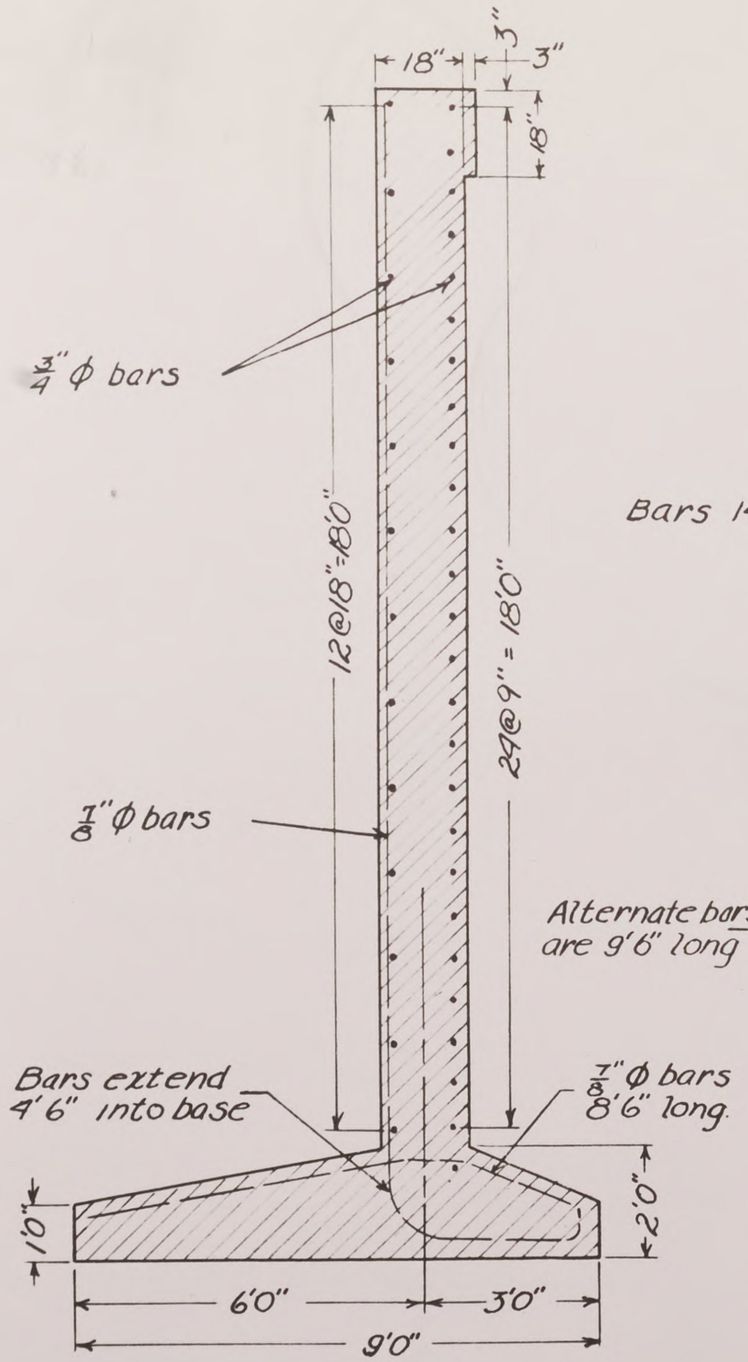

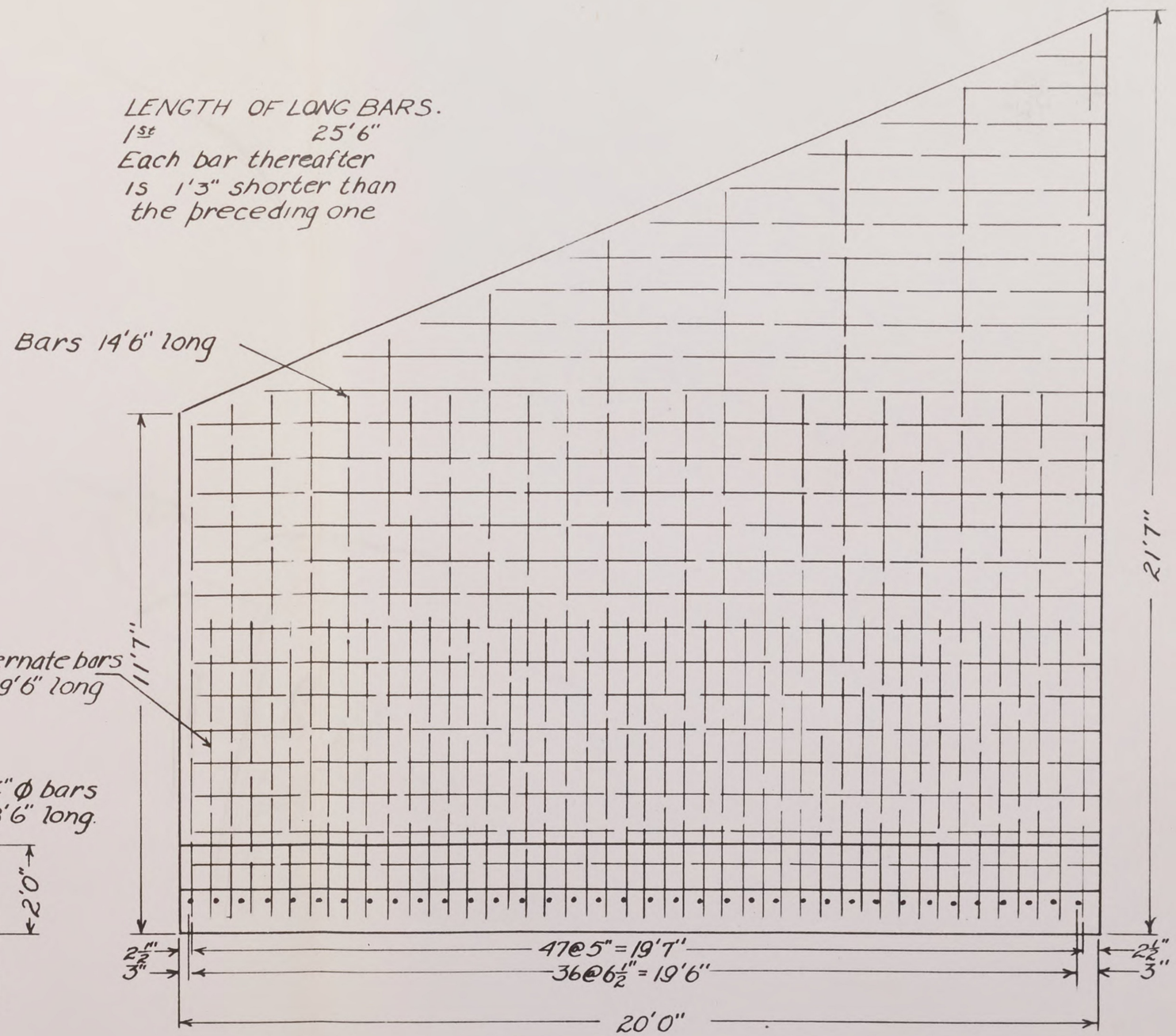

Note: All longitudinal steel to extend 3'6" into the abutment.

CANTILEVER WING WALL

SCALE 1" = 3'0"

Grade

After completion of the bridge design, the new grade of the highway was designed. The grades were made as slight as possible to facilitate traffic and to avoid unnecessary expense.

The grade leading up to the bridge from the north was made 4.4%, the one leading down to the south 4.25 %. The grade on Shields Avenue was made 4 %.

Vertical curves were designed for all breaking points, the location of the curve and the [illegible] inclined on the profile of the center-line.

A continuation of the regular 6 inch curb was used.

A free space of 4 ft. was allowed between the walk and the curb and 4 ft. from the walk to the edge of the fill. The walk will be 5 ft. wide and curve in to enter the bridge.

The cross-sections were plotted, 1 1/2 - 1 slope of dirt being assumed. These areas were measured with a planimeter and the amount of fill determined by the average end areas method.

CROSS SECTIONS OF
SHIELDS AVE. FILL
TOTAL VOL=9649.2 YDS.^{3}

SCALE:
VER. 1"=5'
HOR. 1"=10'

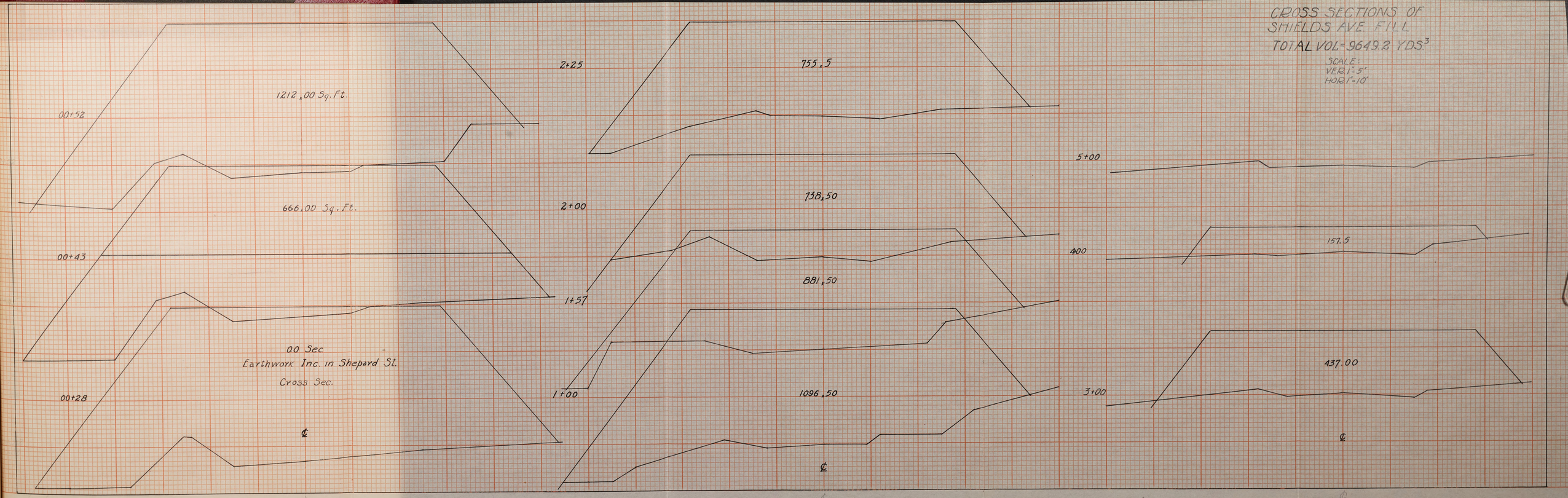

COST ESTIMATE

Total Condemnation Costs	$ 18,000.00
Fill (31,584.4 Cu. Yds. at $.70)	22,109.08
Steel (30,000 Lbs. in place at $.05)	1,500.00
Concrete (1,000 Cu. Yds. at $ 17.00)	17,000.00
Sundries	2,000.00
Total Cost	$ 70,609.00

CONCLUSION

In this design we have been forced to use assumptions regarding bearing power of the earth, concrete strengths and costs of material and labor that would not be necessary in actual practice. However, we have tried to maintain a judicial attitude in the work, and so feel that the results we obtained would correspond very closely with those that would be determined in practice.

The designs made are according to recognized specifications, and there is no doubt that the structure will not stand all stress that would be incurred in actual use.

ROOM USE ONLY

ROOM USE ONLY

MICHIGAN STATE UNIVERSITY LIBRARIES
3 1293 03085 8470