AN ELEMENTARY TREATISE ON REINFORCED CONCRETE

THESIS FOR THE DEGREE OF C. E.

Y. C. Lin

1935

THESIS

Concrete, Reinforced

[illegible]

[illegible]

[illegible]

THESIS

BY

[illegible] Lin

IN PARTIAL FULFILLMENT OF THE REQUIREMENTS

FOR THE DEGREE OF

C. E.

MICHIGAN STATE COLLEGE

EAST LANSING

MICHIGAN

1935

PREFACE

The object of this thesis is to provide a practical, simply-worded guide to construction in reinforced concrete, as distinct from the more theoretical treatment that is seen in many reinforced concrete design books. The theoretical side of the subject has not, however, been overlooked.

This thesis is largely concerned with the practical side of reinforced concrete - with what has been done and can be done with this compound material, and how to do it. The first chapter has an explanation of the advantages of reinforced concrete followed by a discussion as to how the steel and the concrete act together as a compound material. The terms and the formulae are explained in the two following chapters. In chapter V attention is called to a special treatment of the inclined shear stresses in fully reinforced beams which is given in Faber and Lowie's, Reinforced Concrete Design, Vol. I and II. The design of various members including columns and retaining walls are discussed in the chapters that follow. In the last chapter special attention is devoted to the cement, sand, stone, and the modern methods of mixing, proportioning, placing, and curing of concrete.

Every effort has been made to keep the explanations as simple as possible and highly technical language has been avoided. The diagrams have been prepared with the same object, and in fact simplicity has been the writer's aim throughout.

The writer is aware that no short and simple treatment of reinforced concrete can cover the whole field in any complete way. In fact, this thesis is, only intended to serve the purpose of an introduction to the subject and it is necessary for those who desire to specialise in this subject to follow it up with further study.

The writer wishes to acknowledge his indebtedness to Professor C. L. Allen who has read over the manuscript and who has supplied a few ideas.

Foochow, Fukien, Hu Chi Lin

November, 1934

The principal reference books are listed here:

George A. Hool, Reinforced Concrete Construction, Vol. I & II

Oscar Faber and R. H. Wade, Reinforced Concrete Design,

Vol. I - Theory and Vol. II - Practice (London)

Hale Sutherland and Walter H. Gilchrist, Introduction to

Reinforced Concrete Design

Leonard Church Urquhart and Charles Dwight O'Rourke, Design

of Concrete Structures

Purdue University, Engineering Bulletin, How to Weld Faulty

Concrete in Field Structures Vol. XVI, No. 1,

January, 1933

Concrete and Constructional Engineering, Vol. XV, No. 10

and 11, Whitehead and Lowellan, 1917 (London)

The Clemson Agricultural College of South Carolina, Engineering

Bulletin, No. 1, How to Weld Concrete and Reinforced

Steel, Clemson, 1921

George A. Hool and Harry B. Pulver, Concrete Practice

Bernard E. Jones and Albert Lakeman, Cassell's Reinforced

Concrete (London)

George A. Hool and W. S. Kinne, Reinforced Concrete and

Masonry Structures

Benewan L. Lee, Graphs for Engineers and Architects (London)

Chinese Engineering Society's Magazine, Vol. 7, No. 1

March, 1936 (in Chinese)

Lansfield Kerrison, Strength of Materials

Frank M. Seely, Resistance of Materials

James A. Ney, Strength of Materials

F. L. Chao, Reinforced Concrete, 1935 (in Chinese)

An Elementary Treatise on Reinforced Concrete

Chapter I

General Principles

Introduction -- During the past several decades concrete has taken its place as one of the most useful and important structural materials in America and Europe. It has been much more so in China up to the present. Owing to the comparative ease with which it can be molded into any desired shape its structural uses are almost unlimited; so whenever Portland cement and suitable aggregates can be obtained it has, for many constructions, displaced older materials. This apparent ease with which concrete may be prepared has led to its being employed by many who feels that this material is suited to his particular purpose. In many instances, proper knowledge of the substance and skill in its manufacture are lacking, so that the resultant concrete is little more than a bulky, heavy material, lacking the strength and other properties which it should have possessed, and often failing to fulfill the purpose for which it was intended.

To the individuals who obtain such results, concrete is merely a shoveled-together mass of cement, sand, stone, and water, which is a hard thing of varying degrees of coarseness and an uncertain strength. To the engineer who is more or less familiar with the many elements and variables entering into the

manufacture, the process of mixing concrete [illegible] a poor grade or clear lump. Experience shows that a quality concrete cannot be obtained by simply mixing together the cement, sand, stone and water. The quality and quantity of cement, aggregates, and water, and the process of mixing, placing and curing are all involved in the production of good concrete. Results absolutely depend upon all of these variables. It is, therefore, of great importance that the problem of securing and controlling these features should be understood in order that a concrete of the desired quality may be obtained.

Plain and Reinforced Concrete -- Concrete is artificial stone made by cementing together into a solid mass a mixture of inert material such as sand and broken stone, gravel or other aggregate. The cementing material almost universally used for reinforced concrete work is Portland cement, the only exception of note being the aluminous cements that have been put on the market. Both these cements are entirely fine powders, made from definite but different proportions of argillaceous and calcareous materials, which, when wet with the proper amount of water, become chemically active and harden.

The usual proportions of the mix of the concrete are 1:2:4, which means one part of cement, 2 parts of sand, and four parts of broken stone or gravel, all measured by volume; these proportions may not be adhered to in all cases, but are generally used in concrete ~~uses~~ for ordinary structural work. Such a concrete will set and fairly rapidly harden with age, and produce a mass resembling stone in many of its properties.

It is found experimentally that such concrete under good average conditions, will stand on each square inch a compression of 1,600 lb., and a tension of 160 lb., without fracture at the age of four weeks. At the age of three months and over, average values for these strengths would be 2,400 lb./in.^{2} and 240 lb./in.^{2} respectively.+

Let us consider a plain concrete beam slung between two supports and loaded in the center. It is obvious by considering the curved shape it takes up that the ends of the beam remain perpendicular to the axis of the curved or deflected beam. Obviously the beam has its upper portion compressed and its lower portion extended (see Fig. 2).

If we adopt the lower figures as stated above, the beam will therefore fail when the lower face requires a tension stress of 160 lb./in.^{2} and because the upper face will also then only be stressed to 160 lb./in.^{2}, the greater compressive strength of the concrete is not brought into play, and the beam would therefore be very heavy and wasteful, as we shall show, unless we insert tensile steel reinforcement in the form of steel bars or rods which are to be embedded in the tension side of the beam so that it is now strong enough to bring the full strength of the compression in the top of the beam into play.

The above refer to proportions of concrete which underlies the necessity of reinforcing it, is thus the fact that its

---

+ The notation lb./in.^{2} means pounds per square inch, in testing the intensity of stress.

[illegible] tensile strength is only a tenth (approximately one-[illegible]) of its compressive strength and also that its tensile strength, besides being low, is also very unreliable, since it may be entirely unreliable as the result of a blow, or vibration, or from the [illegible] effects of cooling and [illegible] [illegible] of the [illegible]. [illegible] [illegible] [illegible] called the [illegible] and [illegible]. This unreliability [illegible] [illegible] which [illegible] [illegible] or [illegible], [illegible] [illegible] [illegible] [illegible] in retaining walls.

How the question arises as to how much steel is needed in the most economical way? The point of reinforcement at which the tension in steel just balances the compression in the concrete is called the economic percentage. This percentage can be shown to be within the range of say from .50 % up to .68 % or [illegible] even up to .77 % depending upon the values of f_s, f_c and n. See the table on page 16. (Note that for all the examples in this thesis we take p = .675 % throughout). With usual values of the stresses, that is f_c = 600 lb./in.^{2}, f_s = 16,000 lb./in.^{2}, n = 15 this economic amount of steel is .675 percent. of the area of concrete. That is to say, if the area of the section of the concrete beam is 100 square in., measured down to the center of the steel reinforcing bars, then the area of the section of the steel rods need only be .675 sq. in., or we will see that the

square inch of steel in proportion to the total area [illegible] sq. in. of the section of a concrete beam.

Working Stresses in Concrete and Steel -- In the previous paragraph, it has been stated that at the age of four months the concrete should attain at least 2,000 lb./in.^{2} in compression. This is the ultimate strength of the concrete, that is the pressure per unit area required to cause failure and the material has been crushed for some [illegible]. [illegible] safe working stress [illegible] in compression the value [illegible] lb./in.^{2} This indicates the difference between the working stress and the ultimate strength, and this difference is the [illegible] allowance which [illegible] "factor of safety." The factor of safety in the case [illegible] four.

The ultimate strength of ordinary mild steel in tension is 60,000 lb./in.^{2} and the safe working stress is 16,000 lb./in.^{2} (See Part-[illegible]). [illegible] given a factor of safety of [illegible]. [illegible] viously mentioned, the steel rods are introduced in the concrete to provide the necessary resistance to tension, as concrete is deficient in this resistance. It will be seen that, therefore, the 16,000 lb./in.^{2} for steel in tension is a very high figure compared with the values of 600 lb./in.^{2} given for the working stress on concrete in compression and this emphasizes the [illegible]

[illegible] lb./in.^{2} [illegible] about [illegible] (2,000 lb./in.^{2}) [illegible] 16,000 lb./in.^{2} [illegible] lower stress [illegible] 2,000 lb./in.^{2}

proportion of steel required is so small.

The safe working stress for concrete is 650 lb./in.^{2} + and for mild steel is 18,000 lb./in.^{2}

A reinforced concrete structure should have a factor of safety of 4 generally since a load may be about twice the designed load without injury and in any case, if it fails gradually under a load between two or three times the designed load.

Adhesion between Concrete and Steel -- The adhesion, or grip, between the concrete and the steel rods is obviously of great importance, because the two materials must act together and in case the adhesion fails then the steel rods would slip through the concrete and the necessary mutual resistance or bond could not then be developed to enable a full tension pull in these bars. The action is that the concrete adheres or sticks to the steel reinforcement and holds this in position while its tension resistance is being called into play, and this bond stress between the two materials must be high enough to withstand the tendency of the steel to slide which will be present when the steel is being either stretched by tension or crushed by compression for compressive reinforcement.

In design the allowable stressing for shearing adhesion is 100 lb./in.^{2} of the surface of the steel in contact with the concrete, provided the ends of the rods are hooked[1] or otherwise

---

is used. When the stressing of the steel is subject to considerable variation or reversal, and also to insure watertightness in the wall of a circular water tank. See Seely, Resistance of Materials, pp. 16

+ Faber & Houde, Reinforced Concrete Design, Vol. I, pp. 81

1. Faber & Houde, Reinforced Concrete Design, Vol. I, pp. 77

properly anchored. The area of the steel which is in contact will in turn depend on the diameter and length of the rod. A simple rule is that a rod must have a gripping length of at least forty times its diameter, when the end is hooked as shown in the sketch before the resistance of 16,000 lb./in.^{2} can be fully

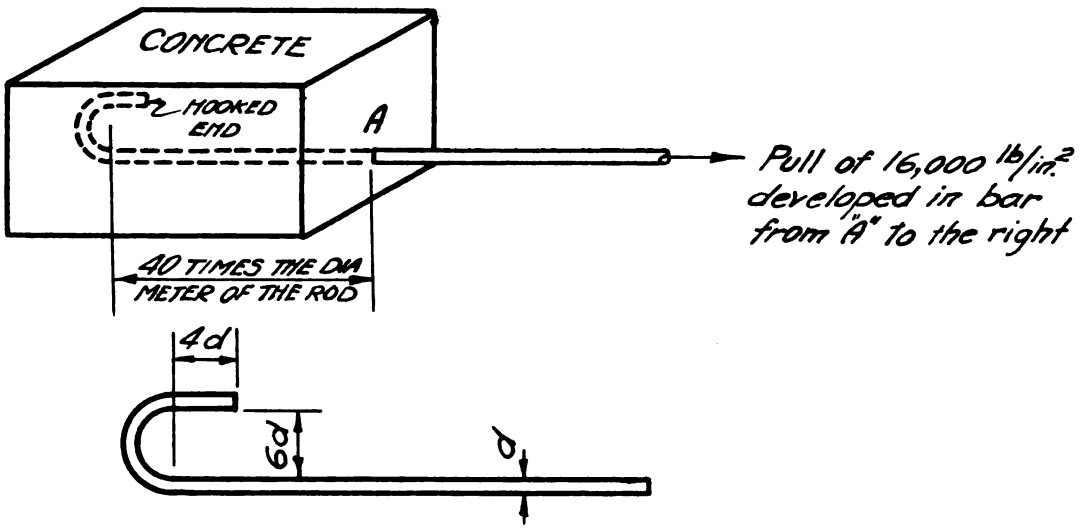

Fig. 1

developed in the steel without the rod slipping through the concrete.[1] This can be shown by simple calculation from the following relation:

$$x = \frac{f_s\, d}{4u} \quad \text{for round or square rods}$$

where x = required length of embedment, including hook

f_s = allowable unit tensile stress in the steel

d = diameter of bar

u = allowable unit bond stress between the concrete and the steel

---

1 Sutherland & Clifford, Reinforced Concrete Design, pp. 108
Ketchum, Reinforced Concrete Construction, Vol. I, pp.60

The Joint Committee recommends a bond stress of .04 of the ultimate compressive strength for plain bars, that is 160 lb./in.^{2} and .05 for deformed bars, that is 200 lb./in.^{2}

When the ends of the rods are not properly hooked but are anchored by a plain bend or other means then the grip length should be at least sixty-seven times the diameter of the rod.

As the adhesion of the steel rods between the concrete is so important it is necessary to see that the surface of the steel reinforcement is not covered with any or dirt or loose scales of rust. The rough surface produced by slight rusting is not detrimental but gives a better adhesion than a perfectly smooth surface, but it is absolute necessary to brush off any loose scales with a wire brush.

The necessity for this adhesion can also be realized from the fact that many patent deformed bars for reinforcement are on the market which have projecting ribs on them.

The Elasticity of Steel and Concrete -- Before proceeding to deal further with the combination of steel and concrete it is advisable to give some explanation ~~and~~ about the elasticity of the materials.

Elasticity does not mean merely that nothing will be in how much a material can be stretched, but it is rather its ability to return to its original size after having been distorted by the application of a load or force. This ability to regain its original shape after the removal of the force is dependent on the material, and varies in different materials, and in the same material it varies according to the shape and size of the piece of material.

[illegible] "[illegible]", [illegible], [illegible], it [illegible] "set" [illegible].

[illegible] it elastic [illegible] by [illegible] the material. [illegible] the [illegible].[1]

$$e = \frac{\sigma L}{E}$$

$$E = \frac{\text{stress}}{\text{strain}} = \frac{\sigma}{e} \qquad (1)$$

where

e = elongation in inches

σ = stress (tensile) in pounds per square inch

L = length of the bar

E = a constant depending on the material (and called the modulus of elasticity or Young's Modulus).

With ordinary mild steel, E only [illegible] up to a stress of about 32,000 lb./in.^{2} (This is called its elastic limit.) After this, the steel yields visibly, although before this the elongation was so small as to be invisibly except with very delicate measuring apparatus. The value of E can be found by measuring the value of the stress and the length of the tested bar and the corresponding value of the elongation within the elastic limit and substituting in the formula (1). The value of

---

1 [illegible], Mechanics of Materials, pp. 16-18
[illegible], Strength of Materials, pp. 3

E for mild steel = 30,000,000 lb./in.²

If a specimen of concrete is subjected to tension, it also elongates and this elongation is extremely small, but just measurable with delicate apparatus.

For concrete E is practically [illegible] is only 2,000,000 lb./in.², [illegible] steel [illegible]. This means, [illegible] steel, and because [illegible], the stress in the steel will be [illegible] the concrete.

For example, if [illegible] 18,000 lb./in.² in tension, then for the [illegible] the concrete stress would be

$$\frac{18,000}{15} = 1,200 \text{ lb./in.}^2$$

As explained previously [illegible] when it is [illegible] lb./in.² [illegible] steel [illegible] 18,000 lb./in.², the concrete will [illegible] have cracked in tension, and is therefore incapable of resisting tensile stresses. Hence the steel must be designed to carry the whole tension, receiving no assistance from the concrete.[1]

---

[1] [illegible], Concrete [illegible], Vol. 1, p. [illegible]
[illegible]

Chapter II

Neutral Axis

The Neutral Axis of a homogeneous beam -- Let us take a wooden beam slung between two supports at its ends and put on it sufficient weight at the center to cause it to break. Upon examination of the broken wooden beam it will be seen that the bottom fibres have been torn apart by stretching or tension and the top fibres are crushed by compression.

Now, it will be obvious that if the top portion of the beam is being crushed or shortened by compression and the bottom portion is being stretched or torn by tension then there must be some line or point at which these stresses change sign, and at this line there can not be any stress because at it there is no tendency either to shorten or stretch. This line, not being subject to compression or tension, is known as the "neutral axis", while the layer of the beam in which it is situated is known as the "neutral plane".

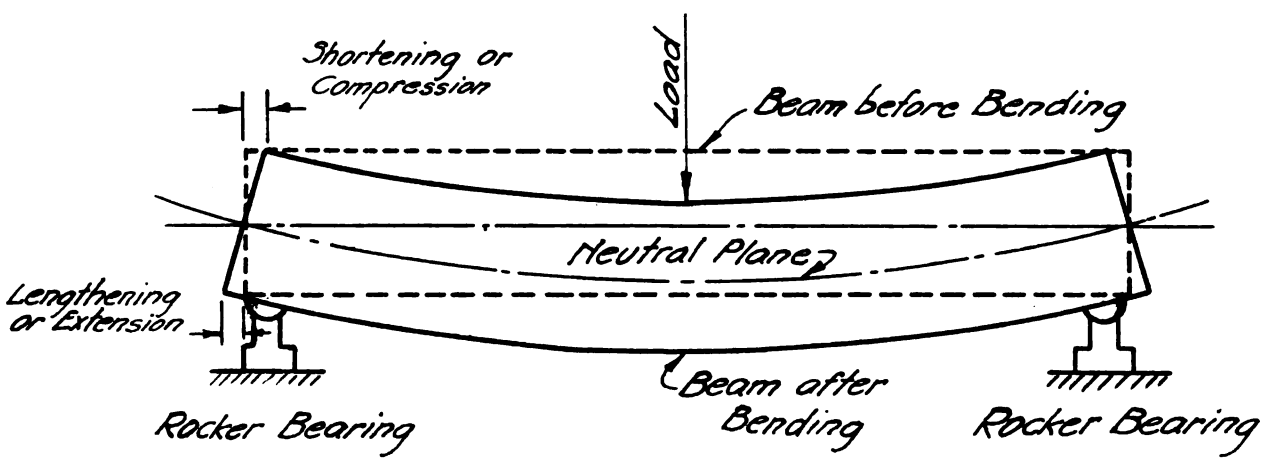

Fig. 2

The position of the neutral axis is dependent on the change from compression to tension stress and the change in the stress from the one kind to the other is gradual throughout the depth of the beam. The greatest compression will be in the top fibres, and this gradually decreases until the neutral layer is reached, where it disappears entirely. The greatest tension is in the bottom fibres and this diminishes upwards until the neutral layer is reached, where again this stress becomes zero, as shown by the shaded portion in Fig. 3.

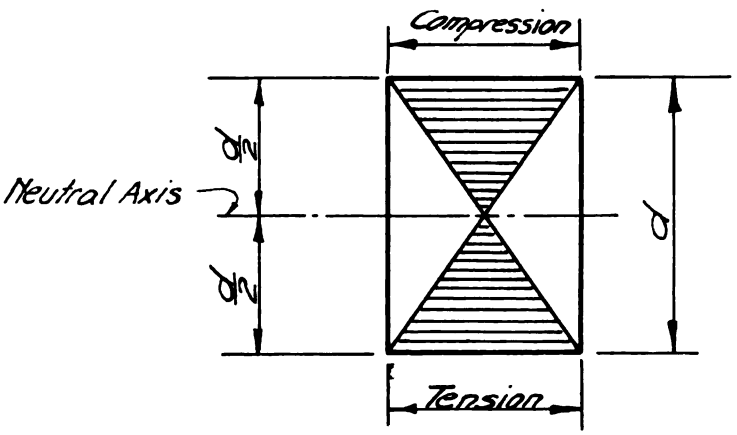

Fig. 3

The importance of a knowledge of the position of the neutral layer will be appreciated when it is considered that it may be necessary to cut a hole through the beam and near the middle of its length and that by making the hole where the neutral axis occurs the beam will not be weakened to any appreciable extent, because the shear stress although a maximum there is also low, whereas if the cutting away is done at the top or bottom of the beam, the section will be seriously reduced where the greatest resistance is necessary.

The Neutral Axis of Reinforced Concrete beams -- For

beams of any given material which is equally strong in tension and in compression, the neutral axis passes through the center of gravity of the cross-section.[1] In the case of a reinforced concrete beam, the position of the neutral axis will not generally be at the center of its depth because the two materials that are used conjointly have different strengths and different elasticity values. As we stated previously the maximum working stress of the concrete should be 600 lb./in.^{2}, and if the steel is at the same distance from the neutral axis as is the top face of the concrete then the maximum stress that could be developed in it would be only 600 x 15 which only gives a value of 9,000 lbs. The steel can, however, be safely stressed to 16,000 lb./in.^{2}, and consequently the neutral axis should occur nearer the top of the beam, so that the stress on the steel is increased without overstressing the concrete.

We can show that the position of the neutral axis in a reinforced concrete beam depends on the depth of the beam, the safe stresses on the concrete and steel, the proportion of steel to concrete, and the ratio of the elasticity of the two materials. The exact position of the neutral axis can be easily calculated by means of the formula given below:

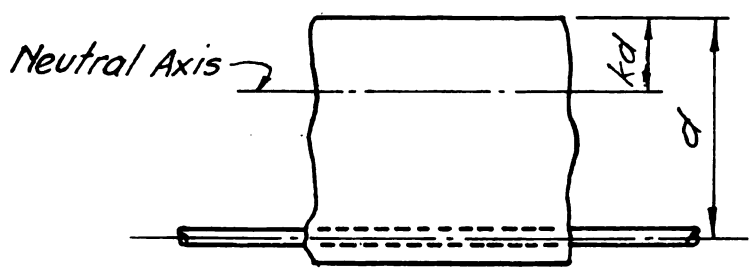

Fig. 4

---

1 Seely, Resistance of Materials, pp. 97

$$k = \sqrt{2pn + (pn)^2} - pn$$

$$\text{Let } p = \frac{A_s}{bd} \qquad \text{and } n = \frac{E_s}{E_c}$$

$$k = \sqrt{\frac{2E_s A_s}{bE_c} + \frac{(E_s A_s)^2}{(bE_c)^2}} - \frac{E_s A_s}{bE_c}$$

$$kd = \sqrt{\frac{2E_s A_s d}{b} + \frac{(E_s A_s)^2}{(b)^2}} - \frac{A_s E_s}{b}$$

A graphical method may be used to locate the position of the neutral axis for a reinforced concrete beam as follows:

Let the unit shortening of the concrete be fixed to cause the proportional to 600 to some scale. Now since the steel stretches only $\frac{1}{15}$ this amount for the same stress, the extension of the steel will be proportional to $\frac{16,000}{15} = 1,000$ on the same scale as that which gave 600 as the shortening of the concrete under stress. Now from a vertical line to represent the effective depth+ of the beam to any scale and then to the above scale set along 600 units to one side of the vertical line at its top and to represent the shortening of the concrete and also set along 1,000 units to the other side at the bottom of the vertical line to represent the extension of the steel and then the oblique line joining these two lines will represent the proportional extension or shortening at different distances from the top, and where it cuts the vertical line

---

+ Effective depth is the distance from the top of the beam to the center of the reinforcement. The concrete below this steel is providing for bending in the beam, while below it it provides protection to the steel against rusting or fire only, the concrete not adding to the resisting power of the beam when supporting a load.

gives the position of the neutral axis. Thus we can see that the depth of the neutral axis be the compressive face equal .5 d. That is the neutral axis is equidistant from the compression face of the beam, as shown in Fig. 5.

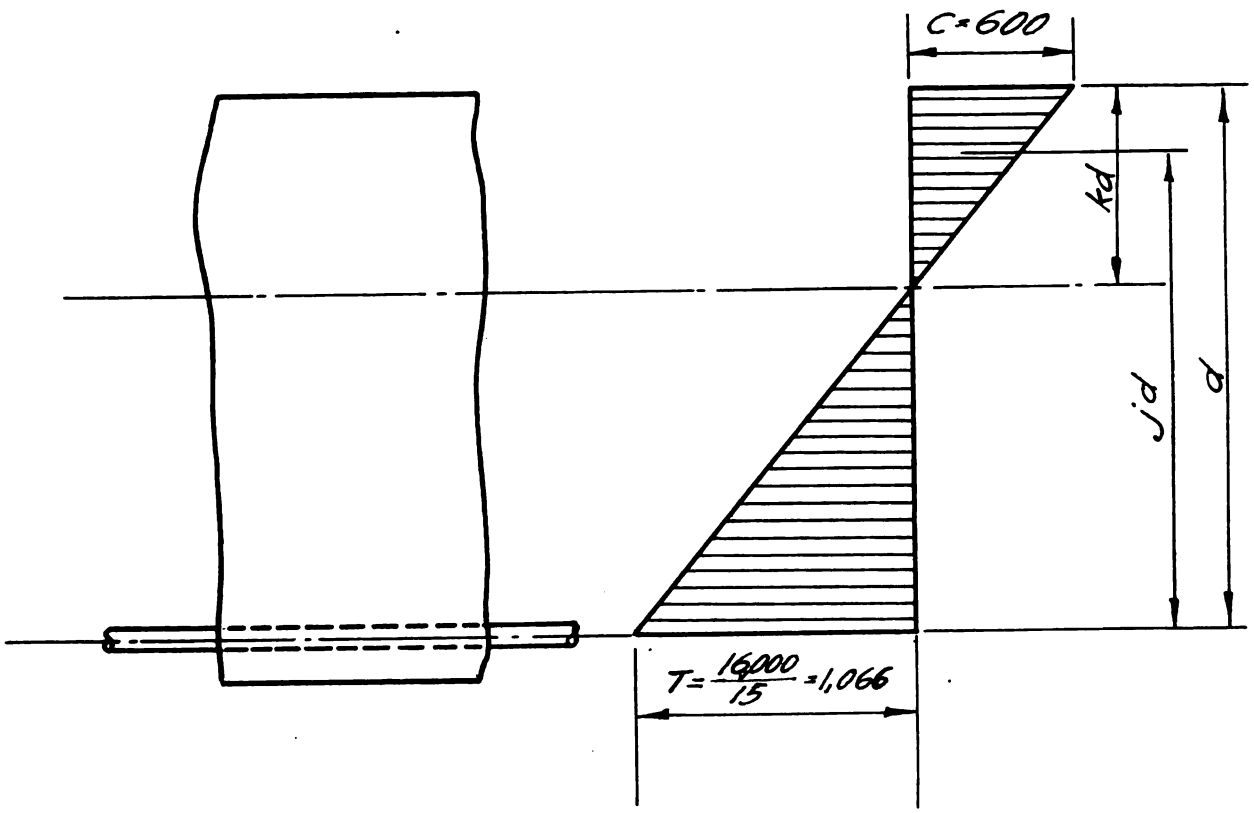

Fig. 5

[illegible] I

[illegible] of Rectangular [illegible]

n	f_s	f_c	k	j	p in %	R
12	16,000	550	0.282	0.903	.50	72.2
12	16,000	600	0.310	0.897	.58	83.2
12	16,000	650	0.328	0.891	.67	95.0
15	16,000	550	0.309	0.897	.58	82.9
15	16,000	600	0.340	0.880	.68	98.0
15	16,000	650	0.370	0.874	.77	107.7

[illegible]

This table is taken from [illegible], Reinforced Concrete Construction, pp. [illegible]-110

Note that for all the calculations in this thesis we will take p = .075 %, k = .06 and j = .[illegible] R = 6[illegible]

Chapter III

Explanation of Terms and Formulae

Before proceeding to deal with the design of reinforced concrete beams, it is necessary here to explain the terms and the formulae we shall use in the design of the beams. The reasoning upon which the various formulae is based should be understood if these formulae are to be used intelligently. Our present intention, therefore, is first to deal with the fundamental principles that must be understood by one desirous of successfully studying the constructional design of buildings and then, in the succeeding chapter, to show how these principles are applied in reinforced concrete construction.

Principle of Moments -- The "bending moment" at a given point in a beam means the tendency to cause bending and this is a distinct term, in-so-much as it does not mean only the actual amount of a force in pounds, or tons, but it measures the actual ability of that force to cause stress at any point by bending around that point and its value is dependent on the amounts of all the forces on one side of this point, their directions and also upon their disposition in relation to that point in the beam where the amount of the bending moment is desired. Thus, "taking moments round a certain point" really means "taking values of the bending moment caused at that point".

Now, the "principle of moments"[1] is that when several

---

1 Merriman, Strength of Materials, p. 42-3.

forces acting in the same plane on a body are in equilibrium, then the moment tendency of all those forces taken together to cause rotation of the body in one direction with respect to any point in the plane is exactly equal to the moment tendency of all the other forces, that is, the sum of the moments of the one set of forces is equal to the sum of the moments of the other set. In other words, it is true that the algebraic sum of all the forces about a point in the plane of forces is equal to zero when the system is in equilibrium.

Reactions -- A reaction is a force which a support exerts on a body in the process of holding it in place. It is obvious that, when the forces are parallel in the system, if the equilibrium is still possible, there must be a reaction or reactions which are equal to the applied forces, but opposite in tendency.

The reactions in the case of a horizontal girder are the passive resistances of the supports against the strain of the material flowing in the process of resisting bending. The reactions at the supports will depend on the magnitude of loads and their distribution along the beam.

In the case of a cantilever, because there is only one support, the whole of the reaction must be supplied by this support and at the same time there is also a tendency for the cantilever to overturn by rotation due to the moment of the loading, that is there is a tendency to lift up the overhanging above the building-in portion or else if there is an overhang-

Let us consider a beam carrying a load of [illegible] tons at the center of its length as shown in Fig. [illegible]. [illegible]

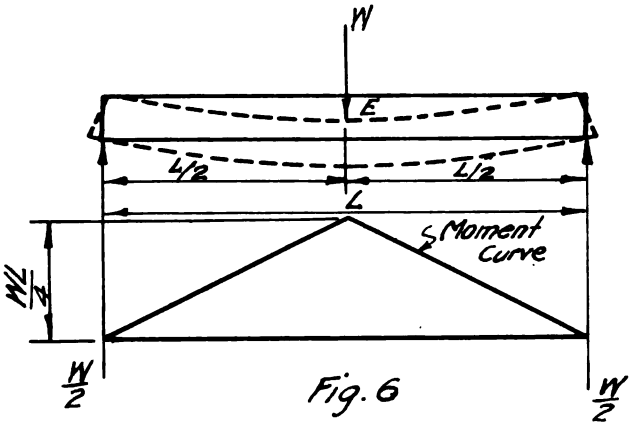

Fig. 6

ar

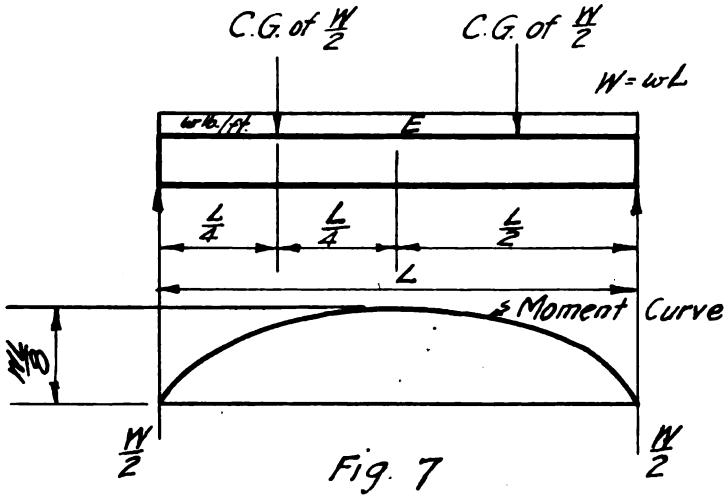

Fig. 7

[illegible]

$$[illegible] = \frac{1}{2}[illegible] \frac{1}{2} - \frac{1}{2} \cdot \frac{L}{4}$$

$$= \frac{[illegible]}{2}$$

[illegible] cantilever [illegible] will be considered.

[illegible] the [illegible] will be [illegible] the [illegible] be equal to the [illegible]. [illegible] will be [illegible] cantilever [illegible] shown in Fig. [illegible]. [illegible]

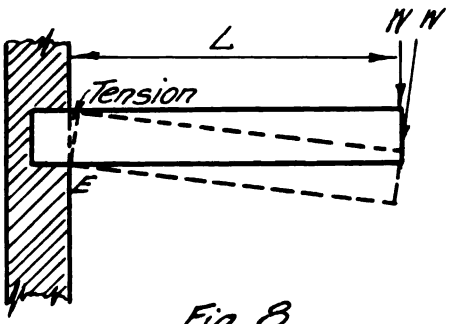

Fig. 8

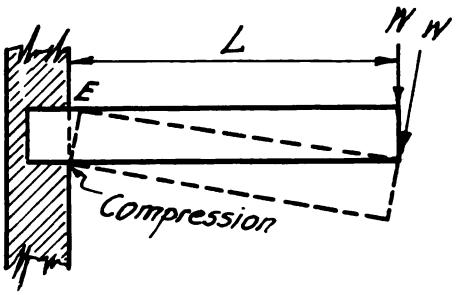

Fig. 9

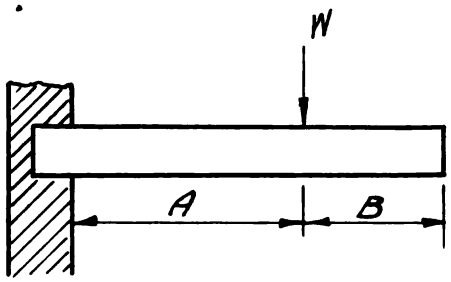

Fig. 10

$$= W \times \frac{L}{\quad}$$

$$= \frac{L}{\quad}$$

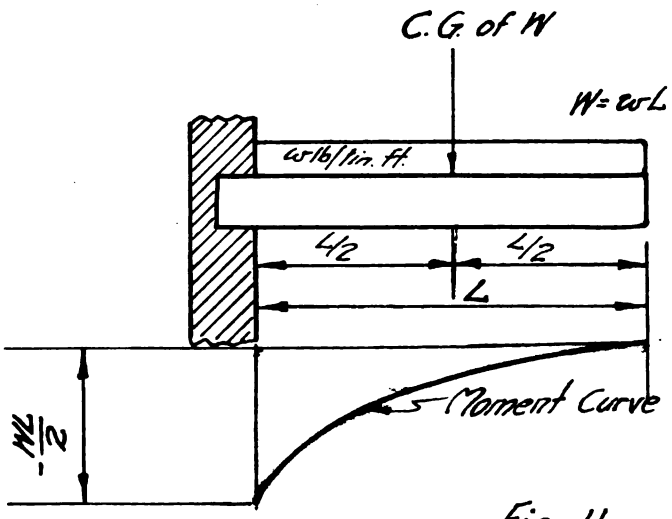

Fig. 11

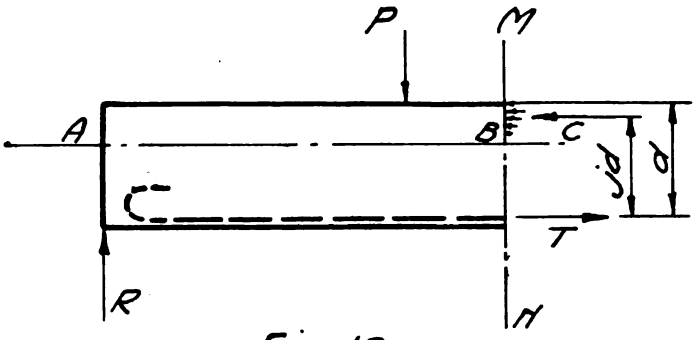

Fig. 12

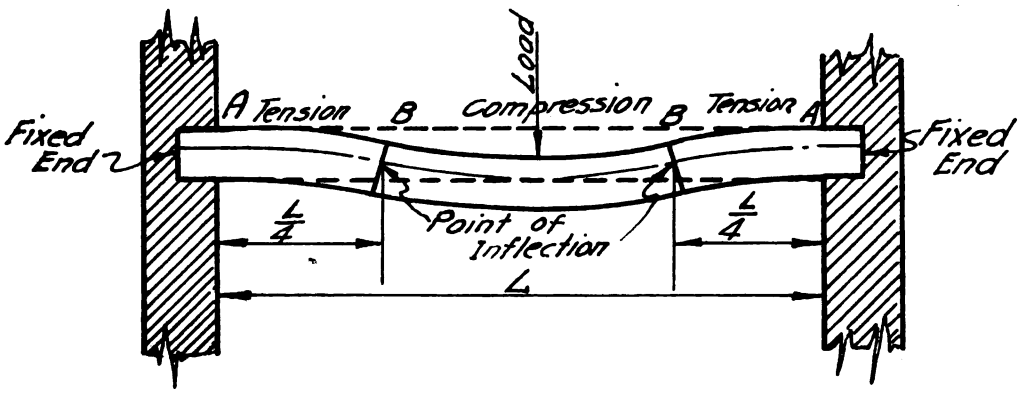
Load
A Tension
B
Compression
B
Tension A
Fixed End
Fixed End
L/4
L/4
Point of Inflection
L

Fig. 13

pression at the ends and tension in the center).

The [illegible] [illegible] [illegible] [illegible] [illegible] [illegible] [illegible] [illegible] [illegible] [illegible] [illegible] [illegible] [illegible] of inflection. [illegible] [illegible] [illegible] [illegible] [illegible] [illegible] degree of restraint at the ends; but in well proportioned [illegible] purposes it may be [illegible] [illegible] [illegible] [illegible] [illegible] [illegible] [illegible] [illegible] [illegible] [illegible] $\frac{1}{4}$ [illegible] L [illegible] the span, and the point of contraflexure is defined [illegible]. It will be readily seen that this change of curvature of the girder at [illegible] is important, because [illegible] it is necessary for the reinforcement to be placed near the tension face of the beam, and therefore the rods must be placed on the upper surface between the points [illegible]; while they are required on the lower surface between the two points marked [illegible]. To accomplish this arrangement, the rods are to be bent-up at the point of inflection.

The fixing of the ends [illegible] the [illegible] strength of a beam because it has the effect of theoretically reducing its span, and therefore this method of fixing the ends of a beam is adopted in practice whenever possible for economy in design.

Beams with Only One End Fixed -- It is not always possible to fix both ends of a beam in practice, but it may be possible to fix one end while the other is only freely supported, and in this case the condition will be as shown in Fig. 14. The action of the load in this instance tends to bend the beam to the shape as shown in exaggerated manner in Fig. 14, the portion AC being under compression on the upper surface, while

to the part [illegible] cantilever [illegible] the [illegible]. The point of

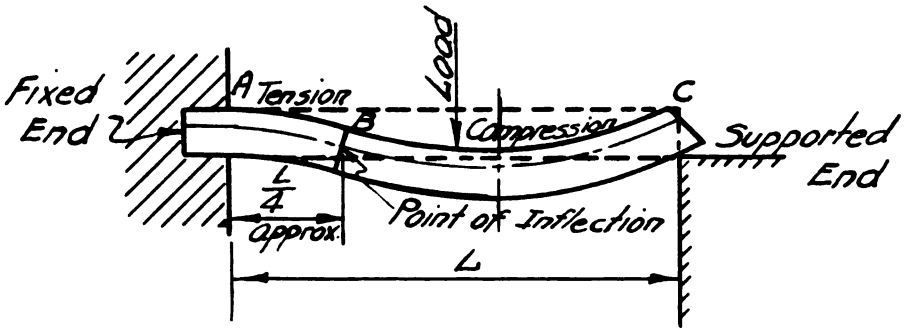

Fig. 14

inflection or position at which the curvature changes is given by at 0.207 L, or, for practical purposes, say, one-quarter of the span from the fixed end. The reinforcement in this type of reinforced concrete beam will require to be placed in the upper surface between the points A and B, and in the lower surface between the points B and C, with two bars in the reinforcement at two points close to and on either side of the point of inflection.

Continuous beams -- The case of a continuous beam is one of some complexity and is fully dealt with in many text-books in Reinforced Concrete Design. The reader can turn to the excellent books on reinforced concrete if he wishes to pursue the study of the subject further. Here it is only necessary to refer to the elementary case.

In reinforced concrete floors it is a frequent occurrence to use beams which are continuous over several spans, the intermediate supports consisting of reinforced concrete columns, and in this case the length of beam between any two columns can

be considered as partial or fixed at the [illegible] of the adjacent spans respectively. In the case of the end span this will generally be taken as supported at the [illegible] where it is resting on a wall and the end supported on the interior column will be considered as fixed. The curve of a beam which is continuous over several spans is shown in Fig. 15, where the bending is indicated.

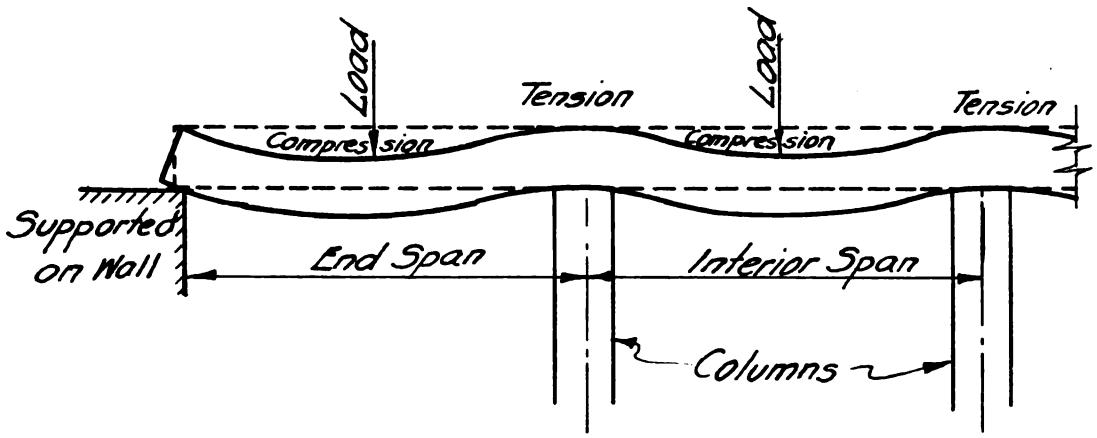

Fig. 15

It will be seen that the stress is alternately compression and tension in both top and bottom surfaces owing to the cantilever action on each side of the column support.

In some cases, when concrete beams are used in conjunction with brickwork, a beam is designed as continuous, running across one or more brick piers, and when this is the case it is essential that the brick piers be built right up to the finished level before the form work for the beam is fixed on the beam soffit otherwise the removal of the form work prior preparatory to the building up of the piers will result in the tendency for the beam to deflect or sag in one large curve and cause tension stress in the whole of the beam's under surface,

and so perhaps failure [illegible] although the [illegible] may not yet be loaded because the [illegible] is [illegible] to provide for expansion there at the points where the piers [illegible].

In addition, the span of the [illegible] between the cantilevers will be the distance between the piers when they are erected complete, and the addition of support to the pier positions while the concrete is green means that the [illegible] is called upon to carry itself (and any applied load) [illegible] longer span than provided for in the design.

It should be noticed that the foregoing is continuous beam [illegible] greatly changed even by slight later settlement of intermediate columns relative to the outer columns or vice versa.

Chapter IV

Reinforced Concrete Beams

It was stated previously that the great problem in the design of reinforced concrete is to find the places where tension may occur so that we may strengthen these places by steel rods so disposed as to be capable of resisting such tension.

Simply-supported beams -- The first step in the designing of a simply supported reinforced concrete beam is to plan its moment and shear at all points in such a way so that for each of its sections its value there shall equal the maximum bending moment that can occur at that section.

The bending moment represents the ability of the external forces to destroy the beam by tension or by compression, the former taking place at the lower part of the beam and the latter on the upper; in the case of simply supported beams.

The compressional and the tensional resistances of a beam must be equal to one another, and these are carried in opposite directions and are parallel, forming a "couple"+ and the value of the moment of resistance of the beam section is the amount of one of these resisting forces multiplied by its distance from the other.

The resistance to compression is supplied by the concrete above the neutral axis, while the resistance to tension

---

+ Two equal parallel forces which are opposite in sense and are not collinear are called a couple. The moment of a couple about any point in the plane of the couple (or any line perpendicular to the plane of the couple) is defined as the algebraic sum of the moments of the forces of the couple about the point (or axis).

is equilibrated [illegible] from the [illegible] of the [illegible]; the torsional resistance of the concrete [illegible] the neutral axis is [illegible] [illegible] [illegible] [illegible]. [illegible] if the [illegible] [illegible], the [illegible] [illegible] [illegible] [illegible] the [illegible] of the neutral axis, [illegible] [illegible] (see page 15 [illegible] 16). [illegible] the [illegible] the neutral axis to [illegible] lb./in.^{2} at the top flange, and the average value is therefore [illegible] lb./in.^{2} [illegible] the total [illegible] [illegible] of neutral axis,

$$C = \text{area} \times \text{average}$$

$$= [illegible] \times \frac{[illegible]}{2}$$

$$= [illegible] \text{ lbs.}$$

and this amount also represent the total tension in the steel.

Now if we write the area of steel as p percentage of the area of concrete, we have

$$\text{area of steel} = \frac{p\,bd}{100}$$

where p is the percentage.

Clearly the total force on the steel is

$$T = \text{area} \times \text{stress}$$

$$= \frac{p\,bd}{100} \times 16{,}000$$

$$= 160\,pbd$$

Now since $C = T$

therefore $100\,kd = 160\,pd$

and "bd" cancels out from both sides,

therefore $100k = 160p$

and so $p = 0.625$

This is the proof for the conventional percentage given in Chapter I. With no other percentage are the pressures of 16,000 in the steel and 600 in the concrete simultaneously reached.[1]

Now as shown in Fig. 17, the compression force C clearly acts at the center of gravity of the top triangle which represents the stress in the concrete, that is one-third the dis-

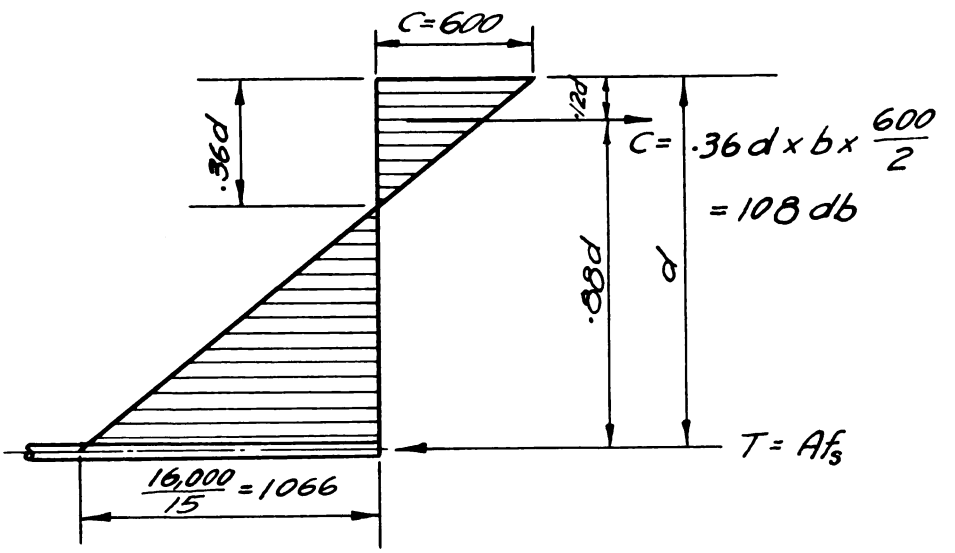

Fig. 17

tance down from the face.[2]

that is at $\frac{.36d}{3}$ = .12d

from the top, or at a distance

d - .12d = .88d

from the center of the tension steel bars.

Now the moment of resistance of a beam is the product of either of the forces (tension or compression) and the distance between them. Denoting this by R (moment of resistance)

---

1 Faber & Newlie, Reinforced Concrete Design, Vol. I, pp. 31
Urquhart & O'Rourke, Design of Concrete Structures, pp. 64
2 Urquhart & O'Rourke, Design of Concrete Structures, pp. 63
Faber & Newlie, Reinforced Concrete Design, Vol. I, pp. 34-36

we have

$$R = \text{force} \times \text{distance}$$

$$= 100 \text{ lb} \times .9\text{d}$$

$$= 95 \text{ bd}^2 \text{ in.-lb.}$$

This is a very important result, as we shall see in what follows.

As an example, calculate the moment of resistance of a reinforced concrete beam which has a width of 14 in., and an effective depth of 24 in., if the beam is of 18 foot span and simply supported at its ends.

Then from the formula the moment of resistance is

$$R = 95 \text{ bd}^2$$

$$= 95 \times 14 \times 24 \times 24$$

$$= 766,080 \text{ in.-lb.}$$

This formula was based on a percentage of steel of 0.675, so that the area of steel rods required would be

$$A = \frac{.675}{100} \times 14 \times 24$$

$$= 2.27 \text{ sq. in.}$$

The area of a $\frac{3}{4}$ in. square rod is .563 sq. in., so that 4 - $\frac{3}{4}$ in. sq. rods give 2.25 sq. in. which is near enough for most practical purpose.

We now need to consider how this calculation helps us to tell what is safe load that the beam can carry. This is done by calculating the bending moment caused in the beam by that loading and provided this bending moment does not exceed the moment of resistance just calculated, then the beam would be safe under those loading conditions.

The total cross-section of the above beam is 14 x 26 (assume 2 in. for covering the steel rods), so it will weigh 380 lb./ft.+, or the total dead load for the beam is 6,840 lb. which is evenly distributed.

So the bending moment at the center of the beam due to its own weight or dead load is

$$M' = \frac{WL}{8} = \frac{6,840 \times 18 \times 12}{8}$$

$$= 184,680 \text{ in.-lb.}$$

The bending moment caused by a safe external uniform load of W_1 lbs. per foot run is

$$M_1 = R - M' = 706,080 - 184,680$$

$$= 521,400 \text{ in.-lb.}$$

$$= 48,450 \text{ ft.-lb.}$$

$$\text{Now } M_1 = \frac{W_1 L^2}{8}, \text{ and so}$$

$$W_1 = \frac{8M_1}{L^2} = \frac{8 \times 48,450}{(18)^2}$$

$$= 1,196 \text{ lb./ft.}$$

Therefore, the beam is safe for a uniformly distributed load of 1,196 lb. per foot run.

Tee-Beams -- It is difficult to provide sufficient resistance to compression in the ordinary rectangular sectioned beam where heavy loads have to be carried and so in order to overcome this difficulty the beam is designed as a T-section

---

+The density factor of concrete is 2.1 times the weight of water but for convenience the weight of concrete is generally taken as 150 lb./cu. ft.

with a wide flange to give more concrete in the top part of the beam relative to the width of the flange as shown in Fig. 18 .

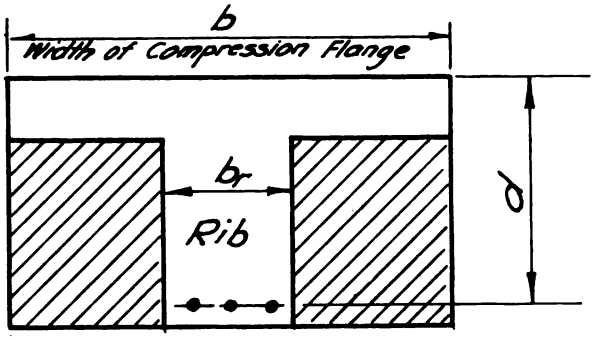

Fig. 18

The construction of this Tee-beam then consists of a what is like a slab which is stiffened by a concrete rib on the underside, or a wider slab and its ribs (or girder) are built at the same time and thoroughly tied together, and these ribs with parts of the slabs (or beams) are then called Tee-beams.

Now referring to Fig. 18, which shows a very wide rectangular beam, it will be remembered that the concrete below the neutral axis (which is roughly one-third the depth down) is in tension, and this is roughly two thirds of it but its tensile section must be neglected in the design, so that the two areas shown shaded are not needed and so can be eliminated without in any measurable way reducing the strength of the beam. In other words, the strength of the rib and the slab for a breadth b acting together is equal to that of a rectangular beam of breadth b and of the same depth d, providing the steel which would be used in the larger rectangular beam is now concentrated into the narrow rib.[1] This improvement is obviously very economical and

---

1 Faber & Bowie, Reinforced Concrete Design, Vol. I, pp. 38

is largely the cause of the economy of reinforced concrete construction.

From what has been said, it is clear that a Tee-beam may be designed as a rectangular beam of breadth b and depth d. However, in case any Tee-beam might have a greater breadth of slab as their compression member than can be called into play, therefore the resistance moment should be calculated from the amount of tension steel used. So Tee-beams may be calculated from the following formula:

$$R = A \times .86d \times f_s$$

where R = resistance moment in in.-lb.

A = area of steel in sq. in.

d = depth of beam + in in.

f_s = safe tensile stress in steel in lb./in.^{2}

from which formula it is easy to calculate R when A, d, and f_s are known, or to calculate the area of steel needed to give a required value for R.

Now the question arises, what limits the breadth b of the Tee-beam? The width b that can be considered as acting with the beam will depend on circumstances, but it must not exceed either of the following:[1]

(a) one-third of the effective span of the Tee-beam

(b) three-fourths of the distance from center to center of the ribs of successive Tee-beams

(c) twelve times the thickness of the slab

(d) six times the width of the rib of the Tee-beam

+ Measured from the top face of the compressed portion to the center of the tensile steel

1 Faber & Bowie, Reinforced Concrete Design, Vol. I, pp. 38
Sutherland & Clifford, Reinforced Concrete Design, pp.354

To make sure that the slab will act with the beams, it is necessary that there shall be bars in the slab across the beam. These bars naturally exist when the slab is continuous and spans from beam to beam, but if the beam in question happens to be a main beam (carrying only secondary beams and not slabs as well) then such steel might not ordinarily be provided, but yet its addition is advisable. As a rule, $\frac{3}{8}$ in. rods at 6 in. center to center for the breadth b will be suitable. See Fig. 19.

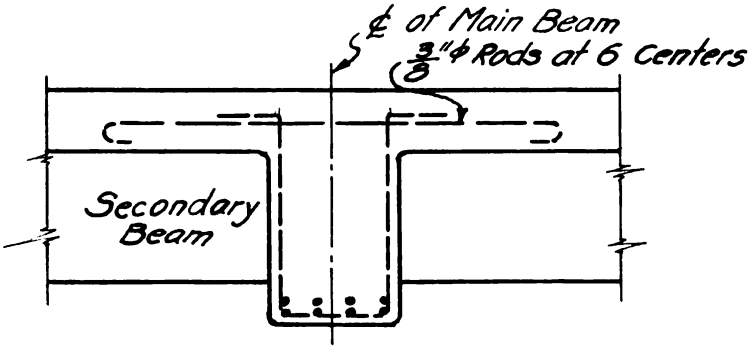

Fig. 19

Then what limits the width of rib (b_r)? The width of rib is also limited by three considerations --

(a) It must not be less than one-third of the beam depth

(b) The shear stress must not be too great. (This will be explained later). It can be shown from this consideration that the width of the rib should not be less than $\frac{W}{200d}$ where W is load on beam in pounds

and d = depth in inches

and, even then, shearing reinforcement is required.

(c) If the beam is a continuous one, then, as explained previously (see Figs. 15 and 16i), it has to re-

sist a negative bending moment over the supports. This negative moment is about equal to the positive moment near midspan. The diagram also shows that, at the support, the bottom of the beams is in compression, and therefore at the support the slab does not help. Hence the beam will be too weak in compression at the support, if b_r is made very much less than b. This effect can be, and often is, overcome by increasing the depth of the beam near the support by means of haunches to the columns, but it may also be necessary to add compression reinforcement and then tension reinforcement will be needed of length .3 span in slab over column and set parallel to beam's length. Even so, it will be found that these negative moment at column supports will often determine the minimum width of the rib.

To make sure that the compression slab is really strong enough, all that is necessary is to see that the percentage of steel, calculated relative to the value of b x d, does not exceed .675 per cent. If it does, the safe strength of the beam would be proportionately reduced, or a larger beam would have to be used.

The above discussion assumes that the neutral axis falls either within the slab or that it concides with the bottom of the slab. If the neutral axis neither falls within the slab nor concides with the bottom of the slab, but falls below the slab, then it means that we have not only omitted the concrete shown in the shaded area in Fig. 18 which was unstressed, but also a part

of that which was only slightly stressed in compression and so also somewhat of use. To check up for this it is only necessary to test whether the thickness of the slab is equal to or greater than .36d.

If the thickness of slab is only slightly less than .36d then the neutral axis falls below the slab and if the thickness of slab is not less than .30d then for such cases the amount of concrete between the underside of the slab and the neutral axis is so small, and the stress value there is so low, on account of its nearness to the neutral axis that the consequent reduction in the resistance of the beam to compression can be neglected in actual calculations.[1]

To deal fully with the exact formulae used in the design of a Tee-beam whose neutral axis falls below the slab is too complicated for us to give here. However, the following approximate method is offered for practical requirements.[2]

When d_s is smaller than $\frac{4}{5}$ m as shown in Fig. 20, take --

$$\frac{m}{d} = \frac{nA}{nA + bd_s}$$

$$R = d - \frac{d_s}{2}$$

$$\text{Then } C = \frac{M}{d - \left(\frac{d_s}{2}\right)}$$

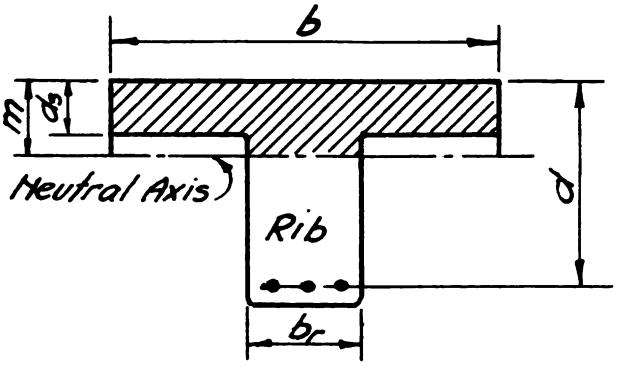

Fig. 20

---

1 Jones, B. E., Reinforced Concrete, pp. 104-105
2 Faber & Bowie, Reinforced Concrete Design, Vol. I, pp. 39-40

$$c_m = \frac{C}{bd_s}$$

$$c = c_m \times \frac{m}{m - (\frac{d_s}{2})}$$

$$A = \frac{M}{(d - \frac{d_s}{2})\ f_s}$$

where m = distance from top surface of slab to neutral axis

n = modular ratio $(\frac{E_s}{E_c})$

A = area of steel

M = bending moment

R = radius arm

C = total compression

c_m = mean compression stress

c = maximum compressive stress in concrete

f_s = safe tensile stress in steel

As an example of Tee-beam design, let us take a continuous beam 20 ft. span, carrying a 6-in. slab, the load being 200 lb. per sq. ft. inclusive of dead weight, and the beams being spaced 10 ft. apart.

The load per beam is : -

$$W = 20 \times 10 \times 200 = 40{,}000 \text{ lb.}$$

Taking the bending moment as $\frac{WL}{12}$, as suggested in Fig. 16i, we have:-

$$\text{Bending moment} = \frac{40{,}000 \times 20 \times 12}{12}$$

= 800,000 in.-lb.

Reference to Table II (page 47) shows that a beam 20" x 8" overall, reinforced with 3-$\frac{3}{4}$ in. round rods and 3-1 in. round rods, gives a resistance moment of 940,000 in.-lb., a little more than is required.

The next step is to see whether the slab is sufficient to carry the compression stresses, so we note that the limiting width is :-

(a) one-third of the effective span of the Tee-beam .....$6\frac{2}{3}$ ft.

(b) three-fourths of the distance from center to center of the ribs of the Tee-beam.....$7\frac{1}{2}$ ft.

(c) twelve times the thickness of the slab...6 ft.

(d) six times the thickness of the rib of the Tee-beam .....4 ft.

Taking the smallest of these, we have available a slab of 4 ft breadth x 6 in. thick.

Table II shows that the beam requires a slab 29.5 in. x 6.57 in. thick. Though our slab is not quite the requisite thickness, this is more than compensated for by its breadth being more than required.

For rough approximation we see, as shown in Fig. 16i, that a continuous beam has a bending moment of $\frac{WL}{12}$ at midspan, but it also has a moment of $-\frac{WL}{12}$ at the support. But the resistance moment given in Table II applies only to the center section of the beam, and so does not apply to the support, because at the support the compression is at the bottom, and there-

fore the concrete slab, which so greatly assists at the center section, is not available for compression at the ends.

If the end of the beam were to be calculated as a rectangular one of breadth 8 in. and depth $18\frac{1}{4}$ in., its resistance moment would be

$$R = 95 \times 8 \times (18\tfrac{1}{4})^2 = 253{,}000 \text{ in.-lb.}$$

But this would really be somewhat larger, because the percentage of steel is considerably greater than .675 per cent., and there would also be some steel on the compression side, but there is no need here to go further with this claculation here.

To make the beam strong enough at the support, it is therefore desirable to increase this moment of resistance nearly four times, which is usually covered by doubling the depth at the end, since it will be remembered that the resistance moment of a beam varies with the square of the depth. Referring again to diagram i in Fig. 16 shows that the reverse moment near the support dies away rapidly along the beam. Therefore the increased depth at the support may also be gradually reduced forming a haunch extending for one-eighth of the span of the beam.

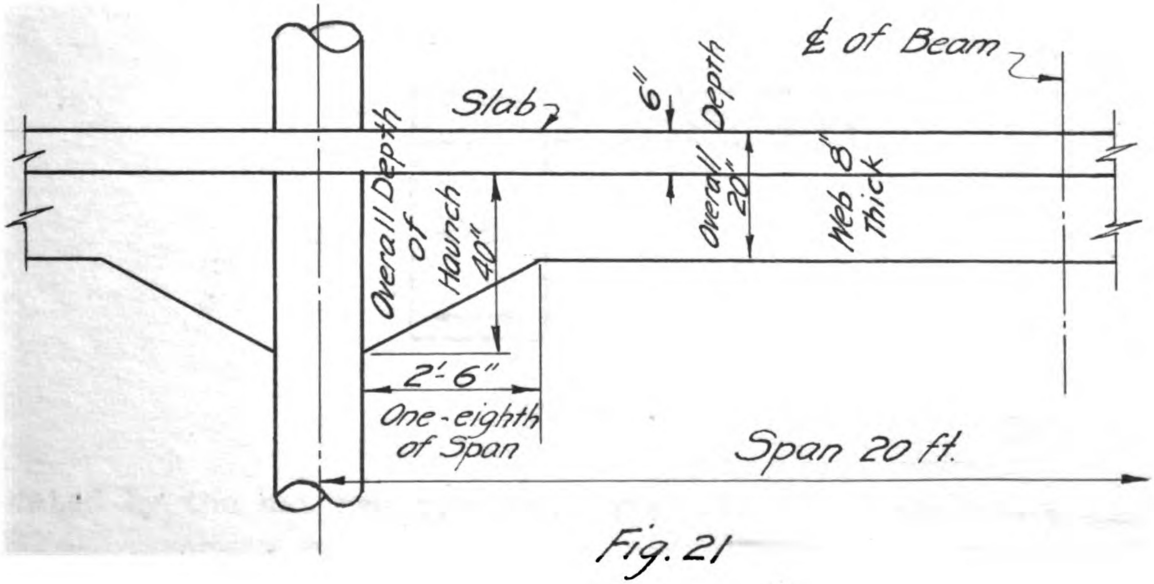

Fig. 21

A general rule for designing the overall depth of the beam at support is to make the beam there twice the overall depth at midspan, as shown in Fig. 21.

The depth and length of haunch should be measured at and from the edge of the column, as shown in the figure.

This beam should now be checked for the tension reinforcement at the top surface of the beam across the column to see if it is strong enough to carry the negative bending moment $-\frac{wL}{12}$ there by treating the beam section as doubly reinforced beam which really is.

The arrangement of the reinforcement cannot be determined until we have considered the question of shear.

Ell-Beams -- In some cases beams are required which have a slab on one side only, as for example those acting as the trimmers around an open well for a staircase, lift, or similar purposes, and then it is not possible to design the beams with a Tee-section. If it is necessary to include the slab in the compressive resistance calculations the beam becomes an ell-section as shown in Fig. 22, and the compression flange is in-

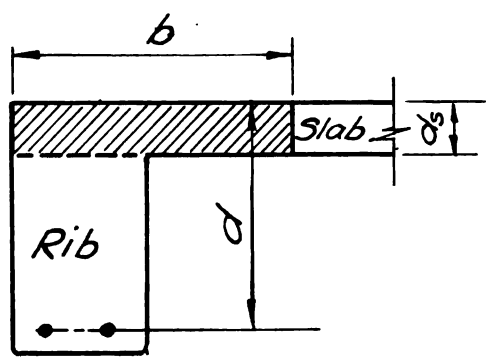

Fig. 22

dicated by the hatched portion. The width b of slab that can be

included as part of the beam is limited to four times the thickness of the slab for all ordinary cases but can be taken as high as six times the thickness only if special extra shear reinforcement is provided to deal with the complicated stress that is set up in a one-sided flange section.

TABLE II

STANDARD TEE BEAMS

NAME	OVERALL DEPTH IN IN.	BREADTH OF RIB IN IN.	TENSION STEEL			RADIUS ARM IN.	SECTION MODULUS IN STEEL UNITS IN.^{3}	SAFE RESISTANCE MOMENT NEAR MID SPAN AT A STEEL STRESS OF 16,000 lb/in^2 IN.-LB.	BREADTH OF SLAB (b) NEEDED IN.	THICKNESS OF SLAB NEEDED* IN.	EFFECTIVE DEPTH d IN.	MOMENTS OF INERTIA	
			BOTTOM LAYER	TOP LAYER	TOTAL AREA IN.^{2}							STEEL UNITS IN.^{4}	CONCRETE UNITS IN.^{4}
12×6	12	6	2-5/8"φ	2-5/8"φ	1.2	9.5	11.4	185,000	10.7	3.88	10 3/4	78.8	1,180
14×6	14	6	2-5/8"φ	2-3/4"φ	1.48	11.1	16.4	256,000	14.9	4.55	15 5/8	133	2,000
16×6	16	6	2-3/4"φ	2-3/4"φ	1.76	12.8	22.5	360,000	18	5.22	14 1/2	219	3,290
18×8	18	8	3-3/4"φ	3-3/4"φ	2.64	14.5	38.2	611,000	23.7	5.95	16 1/2	405	6,090
20×8	20	8	3-3/4"φ	3-1"φ	3.67	16.0	58.6	940,000	29.5	6.57	18 1/4	687	10,300
22×8	22	8	3-1"φ	3-1"φ	4.7	17.6	83	1,330,000	34.9	7.2	20	1,065	16,000
24×10	24	10	4-1"φ	4-1"φ	6.28	19.3	121	1,940,000	42.3	7.9	22	1,710	25,600
26×10	26	10	4-1"φ	4-1 1/4"φ	8.02	20.9	168	2,690,000	50	8.5	23 3/4	2,550	38,300
28×10	28	10	4-1 1/4"φ	4-1 1/4"φ	9.76	22.4	219	3,500,000	56.6	9.2	25 1/2	3,570	53,600
30×12	30	12	5-1 1/4"φ	5-1 1/4"φ	12.2	24.2	295	4,720,000	66	9.9	27 1/2	5,200	78,000

* If slab is of less thickness than given in the column, the breadth needed is greater than given in the previous column

This table is taken from Faber, Reinforced Concrete Design, Vol. II, pp. 156

Shortened and the portion below the neutral axis is

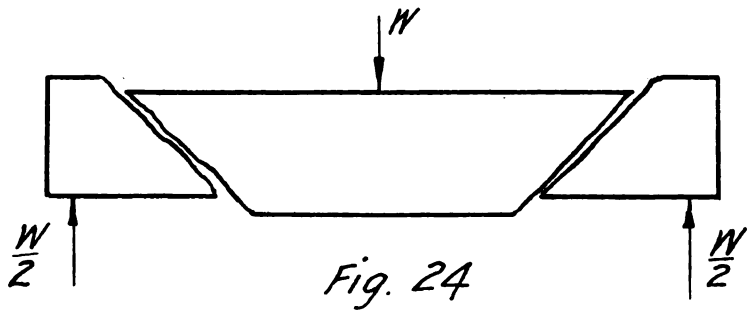

Fig. 24

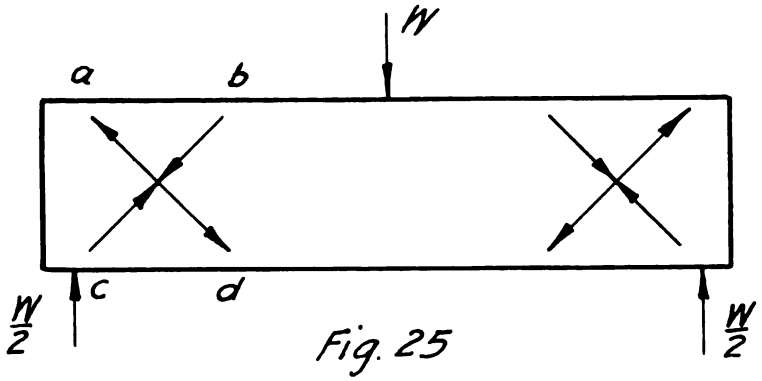

Fig. 25

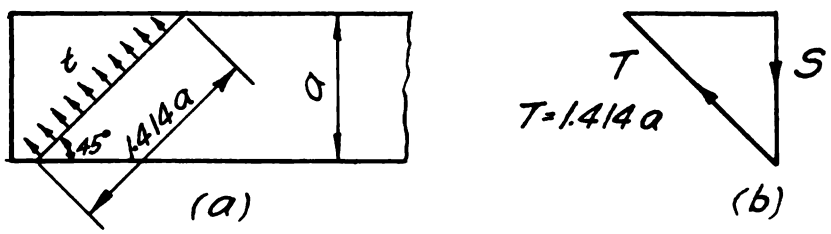

Fig. 26

1

[illegible]

[illegible]

[illegible]

[illegible]

[illegible]

$$= \frac{[illegible]}{[illegible]}$$ [illegible]

[illegible].

[illegible]:

(1) [illegible] or I [illegible] stirrups

(2) [illegible]-up [illegible]

(3) [illegible] bent-up [illegible] stirrups

As an example, a concrete beam having 12 in. [illegible] [illegible]. [illegible] the steel, [illegible] [illegible] loading. What is the safe external load that it can carry without failure by shear [illegible] reinforcement?

[illegible] the depth of a reinforced concrete beam [illegible] to be considered in shear is strictly the depth between the center of the tensile bars and the center of the compression area,[1] which is, usually about .88 times the depth to the steel bars (see page [illegible]).

Hence a = .88 x 12 = 10.56

b = 10 in.

t = 60 lb./in.^{2}

Therefore shear = 10.56 x 10 x 60

---

[1] Sutherland & Clifford, Reinforced Concrete Design, p. 61

$= [illegible]$ lb.

As the [illegible] = [illegible], 6[illegible] lb.

It was explained previously that the [illegible] shear [illegible] having no shear reinforcement is the tensile strength multiplied by the cross-sectional area, the [illegible] that failure occurs by the diagonal tension plane.

[illegible] that a vertical shear reinforcement [illegible] the tensile strength across a diagonal plane. This can be [illegible] by a [illegible] (if inclined [illegible]), [illegible] the tensile force [illegible] the bar there, where T = [illegible] is the tension in the bar.

[illegible] the tensile force [illegible] is the vertical [illegible] $T \sin\theta$, [illegible]

$$= [illegible] \times \frac{[illegible]}{[illegible]}$$ +

[illegible] the [illegible] bar with the [illegible] the direction of the bent-up rod, in the drawn vertical, is [illegible] in Fig. 27 (b). [illegible] the shear resistance of bent-up rod [illegible]

$S = At \times \frac{[illegible]}{[illegible]}$ [illegible] $\sin\theta$

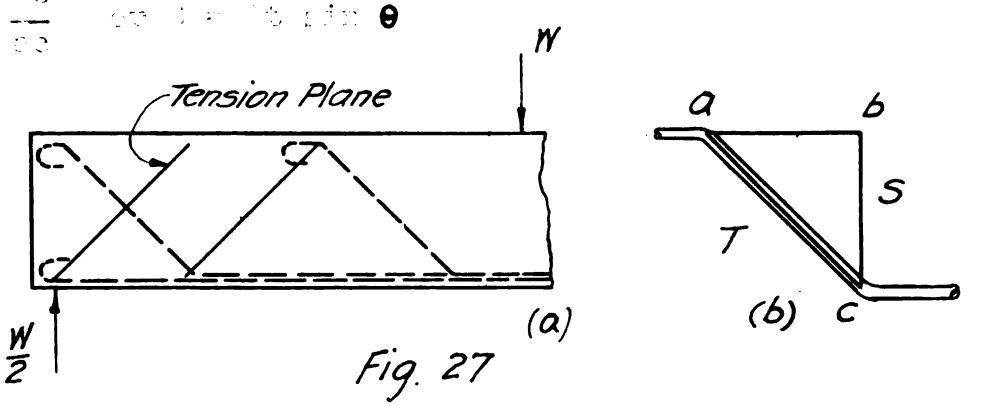

Fig. 27

[illegible] $\frac{[illegible]}{[illegible]}$, [illegible]

+ In [illegible] this [illegible] $\frac{[illegible]}{[illegible]}$ [illegible] θ

$\frac{1}{1.0+x}$, [illegible] the [illegible]

[illegible]

[illegible]

[illegible] later on.

[illegible]

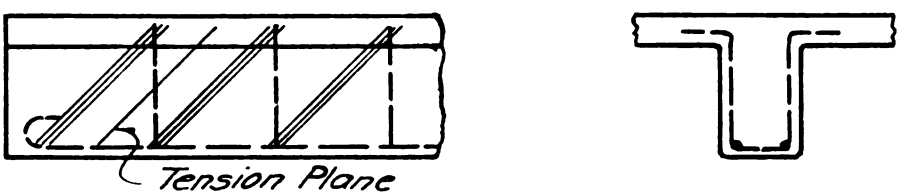

Fig. 28

[illegible] tension [illegible] [illegible] , if [illegible]

[illegible]

A [illegible]

[illegible]

[illegible]

[

[illegible] to the [illegible], [illegible] tensile strength of concrete.

[illegible] following:

A Tee-beam of 25 ft. span carries a uniformly distributed total load of 48,000 lb., as shown in Fig. 29.

The bending moment is

$$\frac{WL}{8} = \frac{48,000 \times 25 \times 12}{8}$$

$$= 1,800,000 \text{ in.-lb.}$$

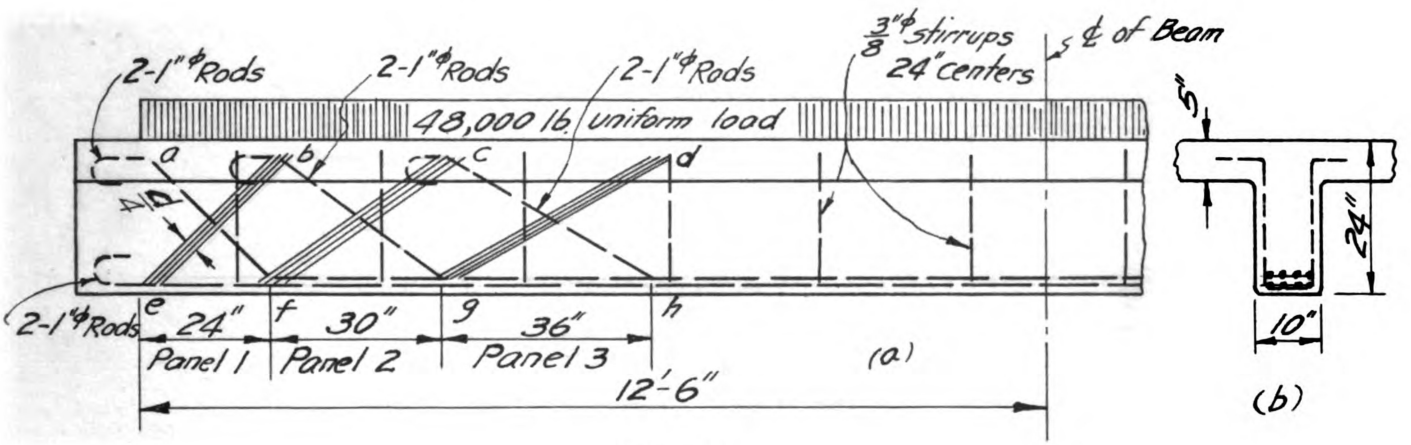

Fig. 29

The area of steel required [illegible]

$$A_s = \frac{1,800,000}{16,000 \times .875 \times 21} = 6.1 \text{ sq. in.}$$

8 - 1 in. [illegible] give 6.[illegible] sq. in. [illegible] four [illegible], [illegible] in Fig. 29, ([illegible]).

[illegible] shear at the end [illegible] is 24,000 lb., [illegible]

$24{,}000 \times \frac{8}{125} =$

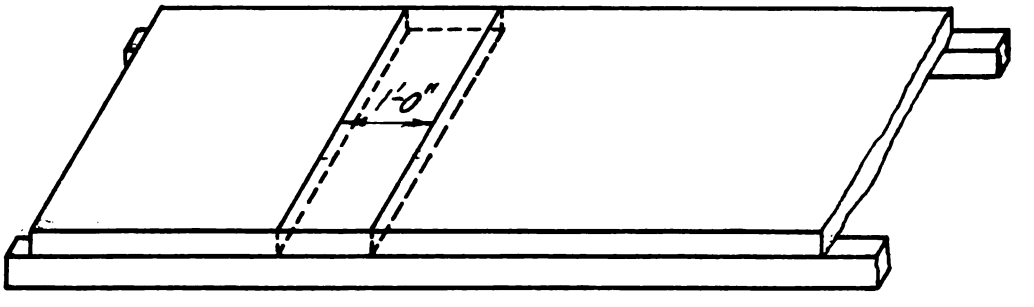

Fig. 30

b

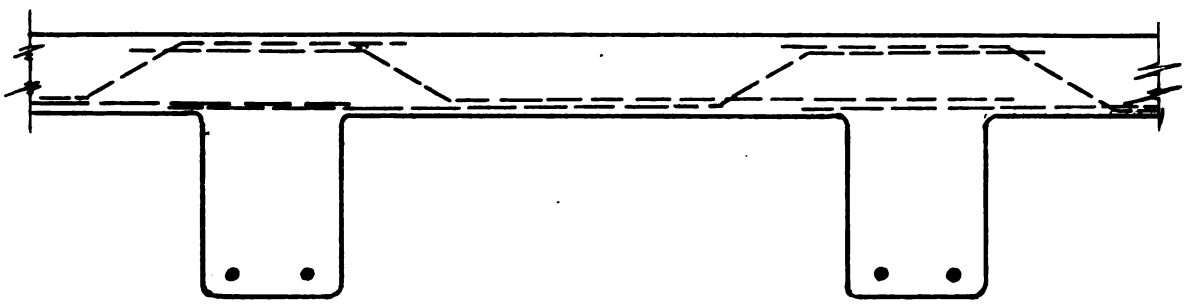

Fig. 31

la

her

u

w

in

$$\sqrt{}$$

$$\sqrt{}$$

be

resist.

[illegible]

[illegible]

[illegible]

+ Theoretical section is the cross-section of the beam so proportioned that b is from one-half to three-quarters of d. ([illegible] ed, Reinforced Concrete Construction, Vol. 1, pp. [illegible] [illegible] Engineers & Builders, Handbook of Concrete Construction, pp. [illegible]

[illegible]

[illegible] = [illegible] in.

[illegible] = [illegible] + [illegible]

= [illegible] in.

[illegible] = f_s

[illegible] = [illegible]

= [illegible]

= [illegible] in.-lb.

[illegible] the [illegible] of the [illegible] [illegible] are [illegible], and thus [illegible] for it is [illegible] to be strong. Let us take the effective depth of 20 in., thus leaving 2 in. for covering and a lever arm of 18 in. The theoretical [illegible] of reinforcement is

$$A = \frac{[illegible]}{[illegible]} = [illegible] \text{ sq. in.}$$

The moment of resistance

$$M = A \times f_s \times [illegible]$$

$$= [illegible] \times 16,000 \times [illegible]$$

$$= [illegible] \text{ in.-lb.}$$

The actual bending moment, however, equals [illegible] in.-lb.; and the excess must be taken by the compressional reinforcement. The actual reinforcement and compressional reinforcement is

$$[illegible] - 440,000 = 100,400 \text{ in.-lb.}$$

Before finding the amount of the compressional reinforcement, the position of the center of gravity of the compressional

reinforcement must be [illegible] in order to [illegible] the lever arm between these two sets of reinforcement. It is [illegible] to place the [illegible] reinforcement [illegible] the neutral axis [illegible], and this will be [illegible] the upper surface of [illegible] Fig. [illegible] the two sets of reinforcement, [illegible] at 6.2 in. [illegible]

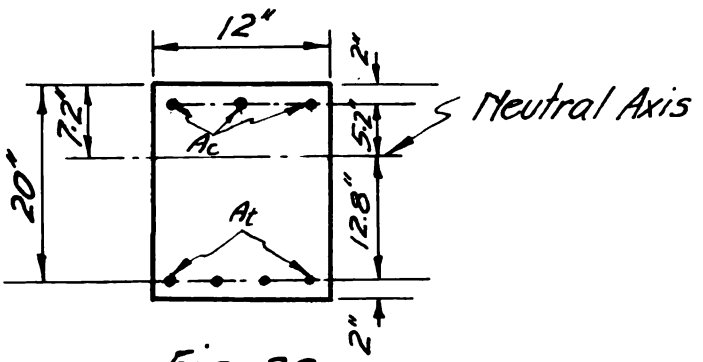

Fig. 32

[illegible] the other at a distance 12.8 in. below that axis.

Let the distance from the upper surface to the center of the compressional reinforcement be d_c, then the distance between the centers of the two sets of reinforcement (or lever arm) is $d - d_c$ (in this case 20 - 2 in. in our case), as shown in Fig. [illegible]

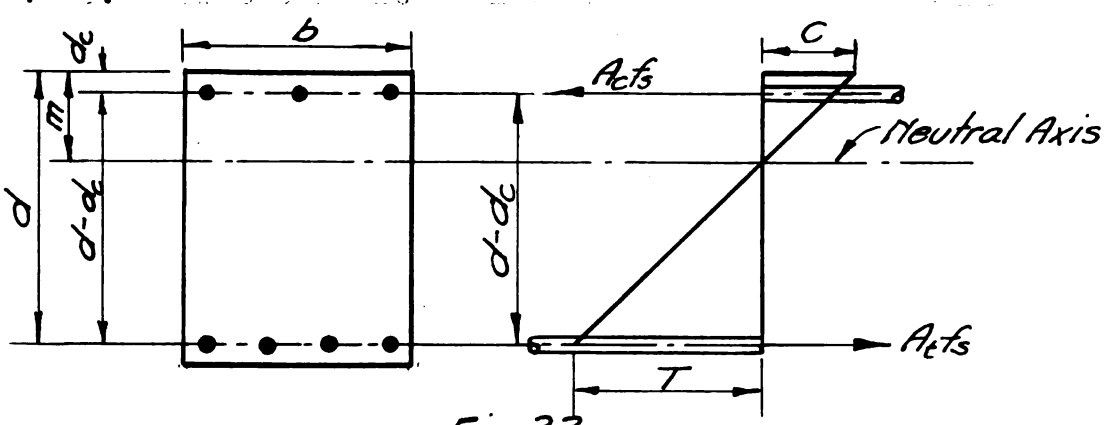

Fig. 33

will be A_s sq. in., and this is obtained by dividing the moment by $f_s(d - d_c)$. This may be expressed as follows:

$$t_1 = \frac{[illegible]}{s(d - [illegible])}$$

$$= \frac{[illegible]}{[illegible]}$$

$$= .[illegible] \text{ sq. in.}$$

This additional reinforcement must be added to the amount first calculated in order to give the total area of tensile reinforcement, which is,

$$1.02 + 0.[illegible] = 1.[illegible] \text{ sq. in.}$$

It is now previously mentioned that if on steel and concrete depending to gether in compression the stress in the steel can only reach 15 times that in the concrete, as it is only under these conditions that they can act together. The stress in the concrete at the extreme edge is found to 600 lb./in.^{2} and generally it is less than the permissible as previously explained.

Now in order that the steel should be placed in the layer where the maximum compression occurs. Obviously the stress in the concrete there will be less than 600 lb./in.^{2}, when the steel is placed at a distance of d_c from the upper surface of the beam as shown in Fig. 22 for it is clear to that neutral axis. The stress in the steel will be equal to $\frac{n(d - d_c)}{d}$ which expresses proportion of stress at this point. The value of c_s as above will equal n (or 15) times this amount, and therefore,

$$c_s = \frac{n \times c(d - d_c)}{d}$$

$$= \frac{15 \times 600 \times (7.2 - 2)}{7.2}$$

$= 6,511$ lb.

Then the area of the compressional reinforcement A_c is,

$$A_c = \frac{\text{bending moment}}{c_s \times (d - d_c)}$$

$$= \frac{180,400}{6,500 \times (20 - 2)}$$

$$= 1.11 \text{ sq. in.}$$

The beam is designed, therefore, for an overall size 22 in. by 12 in., with an effective depth of 20 in., and the reinforcement consists of 2.27 sq. in in the tensional area and 1.11 sq. in. in the compressional area.

It is easily seen that for doubly reinforced concrete beams the total shear resistance than inclined compression, bent up bars and stirrups will have to be larger and so the shear must be very carefully designed for, because of the increase in the compression and tension in the "chord" parts of such beam. As a matter of fact a beam not sufficiently strengthened for its shear resistance would be almost as useless as a plate girder strong enough in its flanges but with too thin a web or one not sufficiently strengthened against buckling or like a bridge truss with proper chords but too weak a diagonal system for its propelling.

Tee-beams -- With regard to tee-beams with double reinforcement, it is not considered necessary to give any particular examples for this class of calculation, as the same formulae

and principles will apply as were given for beams with double reinforcement when the neutral axis falls within the slab or coincides with the under side, and, as previously stated, these are the most common cases. It must be borne in mind, however, that b will represent the width of the flange resting with the beam can be designed upon the assumption that the concrete in the rib is to be neglected.

In any case where double reinforcement is employed, the two sets should also be connected by binding as shown in Fig. 34.

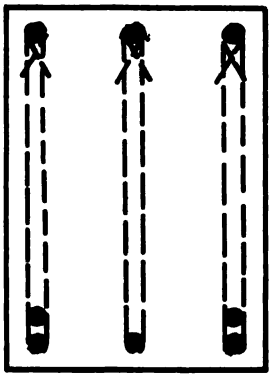

Fig. 34

Chapter VIII

Reinforced Concrete Columns+

Columns are called upon to support the ends of beams and to provide the reactions necessary to counteract their loading. In the ordinary way the columns are subject to direct compression; that is, the stress is not caused by leverage but simply by the direct thrust downwards of a load placed on the top. In many cases the column will also be supporting other columns above, in addition to loads from the ends of beams, and so this total load has to be provided for in the strength of the column.

Plain Concrete Columns -- From what has already been explained it is clear that a concrete column would in many cases be quite satisfactory as a compression member without any reinforcement, since concrete is strong in compression. In certain cases where the load can be ensured to be absolutely centrally applied to the column then it is justifiable in practice to build columns of plain concrete,++ and a safe stress of 600 lb./in.^{2} may be allowed. However, usually it can be by no means certain that the loading will be quite central on the column, and that there will be no bending stresses set up, and therefore in practice a lesser value of safe stress than indicated above should be used.

+ To architects a "column" probably means a long round body to support or adorn a building but engineers often use the term to embrace all compression members.

++ provided that l/d is < 6, where l is length of column and d is least diameter or least side if the column is a rectangular one.

Reinforced Concrete Columns -- It might appear first that to design a column+ which has to carry a definite load centrally or axially applied is a very simple matter, as it seems that there is no complication of bending moments, nature of loads, and similar matters. In practice, however, it is practically impossible to secure axial loading. As will be seen, when a beam is built monolithic with a column at each end, and loaded, the beam necessarily deflects, so that its ends now take up a slope even if they were originally horizontal. The effect of this is that either the beam rests on the inside edge of the column or else the column bends so that its upper ends take up approximately the same

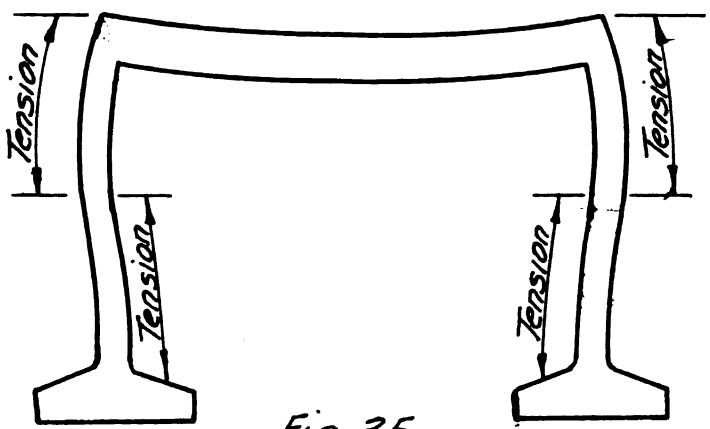

Fig. 35

slope as the ends of the beam[1], as shown in Fig. 35. In either case, the column is subjected to a bending moment in addition to the direct load.

Now the amount of this bending moment depends upon the relative stiffnesses of the beam and the column. If the column is very stiff compared to the beam, it will offer great resistant to the end of the beam, and then the beam will approximate to the case of a beam fixed at its ends, for which the bending moment there is

---

+ providing that l/d is < 15 or l/k is < 40. Here l is the length of column, d is least diameter or least side for rectangular column, k is least radius of gyration of the column.

1 Faber & Bowie, Reinforced Concrete Design, Vol. I, pp. 94-95

$\frac{WL}{12}$. If the column is very flexible compared to the beam, it will offer very little restraint and the bending moment at the beam ends will approximate to zero. Practical cases lie between two limits.

Design of the Outer Column -- To measure the relative stiffness of the column to the beam the quantity[1] $\frac{KC}{B}$ is used, in which

K = a constant depending on the fixity at the other end of the column, and may in general be taken as 6 for outside columns, and 4 for interior columns.[2]

C = stiffness of the column, or equals the moment of inertia of the column divided by its length.

B = stiffness of the beam, or equals the moment of inertia of the beam divided by its length.

Now with Table II on page 47, the moment of inertia of standard beams was given. In Tables III and IV on page 86, the moment of inertia of standard square and rectangular columns are given. With these tables before us, it is therefore quite easy to calculate $\frac{KC}{B}$ of the column for any case.

Tables VII and VIII on page 98 give the bending moments in the column for various ratio of $\frac{KC}{B}$ for outside and interior columns respectively. With all these tables before us, the design of a reinforced concrete column should be quite simple.

For example, suppose we have a beam 20 ft. span carrying 20,000 lb. distributed load including the weight of the beam,

---

1 Faber & Bowie, Reinforced Concrete Design, Vol. 1, pp. 124-131
2 Lee, Graphs for Engineers and Architecture, pp. 58
Faber & Bowie, Reinforced Concrete Design, Vol. 1, pp. 125, 143
Note:- Tables V and VI give the standard square and rectangular columns allow for neglecting $1\frac{1}{2}$ in. concrete cover, while Tables III and IV do not allow for neglecting $1\frac{1}{2}$ in. concrete covering.

supported on columns 12 ft. 6 in. long in the top story.

The beam being considered as fixed at both ends, the bending moment, therefore, is $\frac{L}{12}$. Thus

$$B.M. = \frac{20,000 \times 20 \times 12}{12} = 400,000 \text{ in.-lb.}$$

From Table II, we shall find that the standard Tee-beam 18 in. x 8 in. will be required, and the table also gives the moment of inertia of this beam as 6,090 in.^{4}, whence

$$B = \frac{6,090}{240} = 25.36$$

240 being the length of the beam in inches (20 ft.).

Suppose we support this on an outer column 14 in. x 14 in., then from table III, we find that its moment of inertia is 3,940 in.^{4} whence

$$C = \frac{3,940}{150} = 26.27$$

Taking K as 6 for outside columns, we have

$$\frac{KC}{B} = \frac{6 \times 26.27}{25.36} = 6.2$$

From Table VII it will be seen that the bending moment corresponding to $\frac{KC}{B} = 6.2$ is about $\frac{WL}{17.3}$, which in our case is

$$B.M. = \frac{20,000 \times 20 \times 12}{17.3} = 277,500 \text{ in.-lb.}$$

Now the stress in the column due to bending is given by $\frac{Md}{2I}$[1]

where M = the bending moment

d = the diameter of column (if a rectangular column is used d is the least side).

I = the moment of inertia

or in our case

---

1 Faber & Bowie, Reinforced Concrete Design, Vol. I, pp. 130

$$= \frac{277,500 \times 14}{2 \times 3,640} \ldots\ldots\ldots\ldots = 483 \text{ lb./in.}^2$$

The direct stress due to load is $\frac{R}{A}$

$$= \frac{10,000}{220} \ldots\ldots\ldots\ldots\ldots\ldots = 44 \text{ lb./in.}^2$$

Adding gives a total $= 527$ lb./in.^{2} +

Where R is the reaction and A is the total area of concrete and steel in the column, as given in Table II.

The calculation for the foregoing column was for the top floor, that is, for one which stopped at the beam it supported. Such a column is subjected to greater bending stresses than a column in a lower story which also runs up above the beam it carries, because in that case the bending moment from the beam is carried partly by the length of column above the beam and partly by the column below it.

Let us consider an outside column 14 in. x 14 in. that is supporting a standard Tee-beam 18 in. x 8 in. x 20 ft. span, carrying 20,000 lb. distributed load at roof level, and also supporting a similar beam and load at next floor, 12 ft. 6 in. lower, a similar beam and load 12 ft. 6 in. lower still, and so on. Now the stresses in the column of the top floor will be exactly as calculated above (assuming that the roof dead loading intensity is same as floor loading). But, as an example, those in the floor next lower to the top floor will now be calculated.

Column carries	10,000 lb. from roof level
Column carries	10,000 lb. from floor level
Total	20,000 lb.

+ These stresses do not include those due to wind pressure, which would be important and greatest near the ground.

From Table III on page 86 the equivalent area of a 14 in. x 14 in. column is given as 230 sq. in. Therefore the direct stress is

$$\frac{20,000}{230} = 87 \text{ lb./in.}^2$$

Now $B = \frac{6,090}{240} = 25.36$ as before; but the stiffness of the column is made up of two parts, one above the floor, and one below the floor. Taking K as 6 as before, then,

$$KC \text{ above the floor} = 6 \times \frac{3,840}{150} = 157.62$$

$$KC \text{ below the floor} = 6 \times \frac{3,840}{150} = 157.62$$

$$315.24$$

Hence the total KC as effecting the joint between the column and the floor beam equals 315.24, whence

$$\frac{KC}{B} = \frac{315.24}{25.36} = 12.5$$

From Table VII on page 88 the moment factor at the joint due to this is .068 WL and the bending moment is,

$$M = .068 \times 20,000 \times 20 \times 12$$

$$= 312,000 \text{ in.-lb.}$$

As stated previously, half of this moment is carried by the upper length of column, and half by the lower length, so that the column under the first floor below the top floor (roof) only carries

$$M = 156,300 \text{ in.-lb.}$$

The stress due to the bending is

$$\frac{Md}{2I} = \frac{156,300 \times 14}{2 \times 3,840} = 278 \text{ lb./in.}^2$$

so that the maximum stress there is 278 + 87 = 365 lb./in.^{2}

From the example shown above, it will be seen that while the direct stress is double (as the lower column carries two

floors instead of one) the bending stress is much reduced, and the total stress is less. If we investigate the stresses for the column under the next lower floor, we shall get,

direct stress $= \frac{30,000}{230} =$		130 lb./in.^{2}
stress due to bending moment =		278 lb./in.^{2}
	total	408 lb./in.^{2}

and so on.

From this, it will be seen that in outside columns the stresses are often greatest in the top floor or under the roof, and that the section of the outer column required for the top floor will also be strong enough for several tiers down. It is advantageous, therefore, to make the outer column the same size on all floors for a building of not more than four to six stories in height, for the reason that the constant section enables the column moulds to be used again which is often a more important consideration than the saving of a few inches of concrete by varying the section of the column.

The Design of the Interior Columns -- In the interior columns, the bending moment generally plays a less important part. It will be noted that the dead load is not going to cause any bending moments in the column, since the dead load is balanced. The only bending moments on the interior column will be the live load when the panel on one side is loaded and that on the other is unloaded as shown in Fig. 36. Therefore, in Table VIII, l is the live load only whereas for Table VII, W is the sum of dead and live loads, since both these loads produced deflection and bending on the column.

Bending moments on interior columns may be sometimes neglected without great risk while to do so in outer columns is very dangerous.

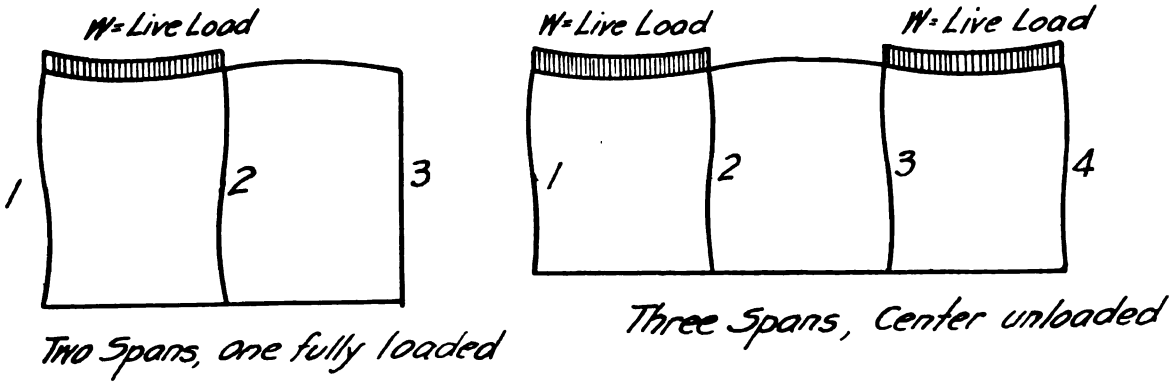

Fig. 36

The general design of [illegible] rior columns has been given. It is necessary to state briefly the arrangement of the vertical bars and the lateral binding in the column section. As shown in Fig. 37, the diagram (a) is the commonest form of reinforced column up to 16 sq. in. or thereabouts. After that eight rods are generally used up to 24 sq. in. as the diagram (b).

It will be noticed that the rods are placed near the edges of the column rather than towards the center. The reason for this is because the action of the rods is principally to take up any tension which may occur during bending and, as such tension exists only near the edges of the column, it is there that the rods are placed. It should be noticed also that as the rods are placed near the edge and are in general very long in comparison to their diameter they would be extremely liable to buckle, and so bursting the small covering skin of concrete around them away from the core of the column and thus allowing the rods to buckle outwards and so destroy it. To prevent this the vertical rods are held in by means of bindings as shown in

Fig. 37. These bindings are generally about $\frac{1}{4}$ in. diameter+ round rods, and occur at about 6 in. centers in the column, and the vertical rods generally vary from $\frac{1}{2}$ in. diameter up to $1\frac{1}{4}$ in. diameter. The amount of longitudinal reinforcement used should not be more than 2 per cent. nor less than 0.5 per cent. of the total area of the column.

When only four vertical rods are used square bindings are all that is necessary, but where eight rods are used square binding would not be effective in preventing the rods in the middle of the faces from bursting outwards, since considerable movement could take place before the binding could become effective. Therefore additional bindings have to be used, as indicated in diagram (b) in Fig. 37.

Another form of reinforcement for columns is the spiral binding indicated in Fig. 37 (c). This was first thoroughly investigated by Mons. Considère. Spiral binding considerably strengthens the concrete by preventing it from bulging when the load is applied.

+ There is no rational method of determining the size of the steel rod that should be used for a lateral tie. A safe rule to follow is to use a bar of such diameter that the area of its section is not less than 2 per cent. of the section of the longitudinal reinforcement held in place by the tie.

Chapter IX

Reinforced Concrete Walls

Reinforced concrete is used for the construction of walls of different types which can be divided into two main classes; namely: the walls of a structure above the ground and retaining walls for the support of earth or water.

The Walls of a Structure above Ground -- In this type, the walls are usually in the nature of panels filling in between the main weight-carrying members of the framework, and no great strength is required because these panels merely act as a screen to keep out the weather. Generally speaking, these panels may be of any thickness not less than 4 in. and it is rare that more than 6 in. is required when they are not loaded that is when all loads are transmitted directly to the framework of the structure. Each panel in any external wall is generally designed to safely resist a horizontal wind pressure of at least 30 lb./ft.^{2}, assuming that this pressure is acting uniformly over the area of one panel from either side. It should be said that the panel must be strong enough to resist pressure outwards as well as inwards to provide for the suction that occurs on the leeward side of a building during a gale and also to allow for pressures that may be caused by materials stacked against the wall inside the building, and because of this the reinforcement must either be placed in the center of the concrete wall or the wall must be reinforced near both its inner and outer surfaces.

The panel of the wall mentioned above will resemble a

slab on edge in a vertical position with a horizontal wind bending exerted on either one of the faces, and all the points stated above in connection with the design of floor slabs will apply except that the dead weight of the slab itself will not in this case have to be added to the applied load or pressure, for the reason that its own weight will not cause any bending moment but may cause some column action which may be somewhat augmented by a load arising at the upper bent. Unless the distance between the main weight-carrying piers is excessive the specified wind pressure of 30 lb./ft.^{2} will not produce a very large bending moment and the thickness of concrete and the vertical area of the steel required will be very small.

Where openings occur in the wall the strength required around the edges is usually provided by the addition of some extra reinforcement, and all rods that are cut by the edges of the opening must be hooked at their ends around the rods perpendicular to them placed around the edges of the opening.

Retaining Walls -- As we stated previously retaining walls are built to support or retain earth or water, and the most suitable material for this purpose is reinforced concrete.

Wall for Retaining Earth -- A mass of earth standing alone will not stand up with a vertical face, but portions will commence to slide down, especially when exposed to rain or frost. A simple method to illustrate the natural tendency of soil to slide down and thus form sloping sides without lateral support is by pouring sand on to a floor. The slope or the angle that

the sloping sides makes with the floor is known as the "angle of repose". This angle will vary with different materials and also in the same material according to the state of compaction and dryness. Dry sand will usually assume an angle of about 30 degrees with the horizontal, whereas clean fine gravel will make an angle of 40 degrees. When it is necessary to make the earth stand up at a vertical face or at a slope greater than the natural slope, it becomes necessary to build a retaining wall in front of it, and the pressure exerted on the back of such a retaining wall will depend on the difference of slope between the face of the wall and the natural slope of the material.

As shown in Fig. 38, the natural slope of the soil is indicated by the sloping line a-b and the retaining wall is shown

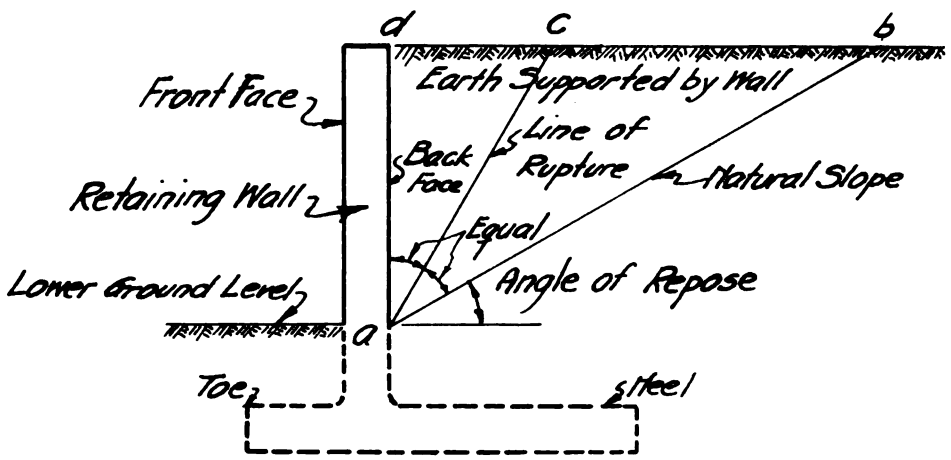

Fig. 38

in outline above the lower ground level. The slope line a-c is the "line of rupture", and it is only the wedge-shape portion of earth between this line and the back of the wall which will be required to be supported. If the wall should be suddenly removed, the portion of the earth between the line of rupture and the back face of wall will slip down first, because there is

a large amount of friction [illegible] between the [illegible] wedge that is also tending to slide on the portion below the natural slope which will remain stationary, and to allow for this friction the angle between the natural slope and the face of the wall is divided into two equal parts to give the line of rupture.[1] The earth contained in the triangle between the line a-c and the back face of the wall b-c as shown, presses against the wall and tends to push it over, and the wall must have sufficient weight and strength to resist this push.

In the design we consider a length of one foot at least in calculating the weight of soil to be supported and in the design of wall. But it is necessary to consider both the vertical portion of the wall and the base, because the latter must be sufficiently large to anchor the vertical portion and to distribute the pressure over such an area of foundation as is necessary to bring the load per square foot within the safe resistance of the soil.

As an example, a diagram of a retaining wall is drawn to scale, as shown in fig. 33, where the natural slope and the line of rupture are indicated for the particular soil to be supported. As just explained the earth between the line of rupture and the back face of the wall is the portion which causes a pressure on the wall and it is only the effect of the weight of this portion that we need to consider. But the weight of the earth in the triangle A-C is calculated according to the nature of the soil,

---

1 Jones, [illegible], Reinforced Concrete, p. 128

[illegible]

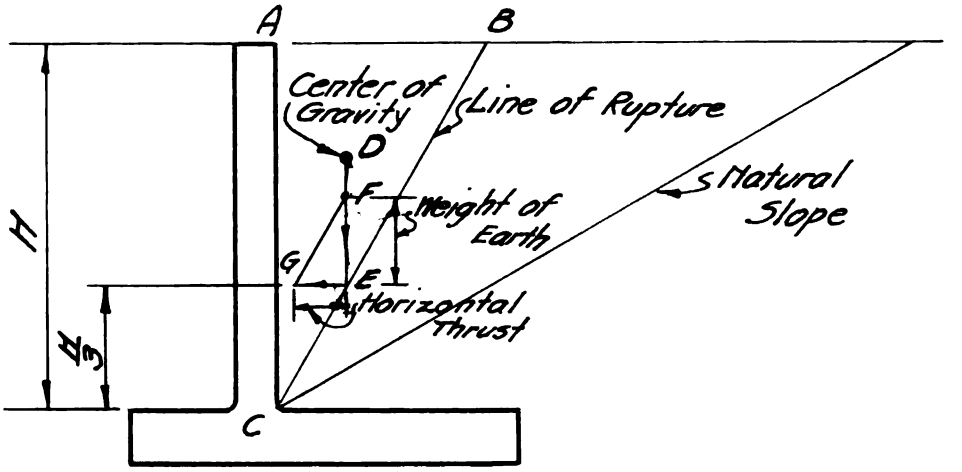
A
B
Center of Gravity
Line of Rupture
D
F
Weight of Earth
Natural Slope
H
G
E
Horizontal Thrust
H/3
C

Fig. 39

[illegible]

b

situ

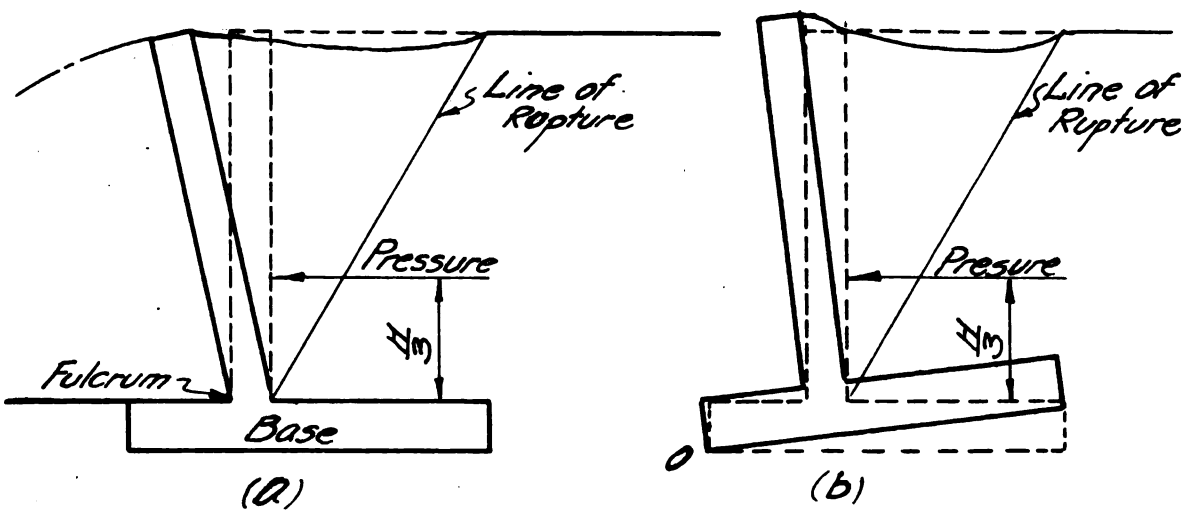
Line of Rupture
Pressure
H/3
Fulcrum
Base
(a)
Line of Rupture
Presure
H/3
o
(b)

Fig. 40

[illegible]

[illegible] of the wall [illegible] overturning.

In the design of a retaining wall, therefore, [illegible] (1) [illegible] (2) the vertical position [illegible] (3) the vertical position must be [illegible] (4) [illegible] weight, the weight of the earth line, [illegible] the overturning.

It is not always possible [illegible] project at the back of the wall, as for example, [illegible] earth [illegible] to the projecting [illegible] land. It is frequently [illegible] required, and the type of wall [illegible] project [illegible] the vertical position, as shown in Fig. 41. In this type of wall there is [illegible] weight of earth on the base to prevent overturning, [illegible]

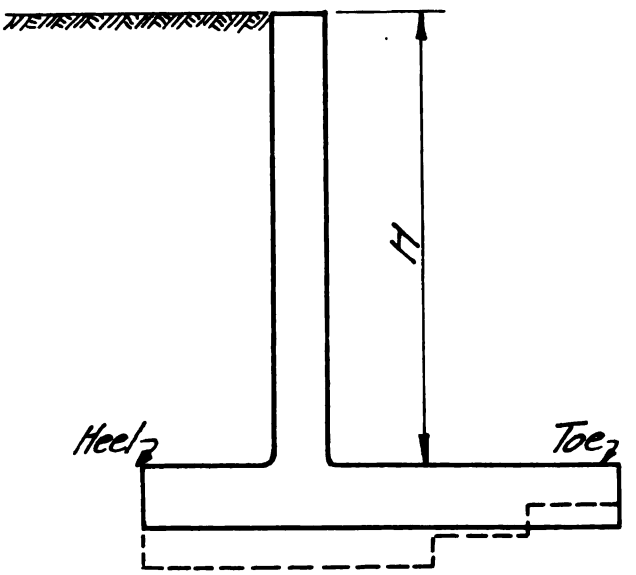

Fig. 41

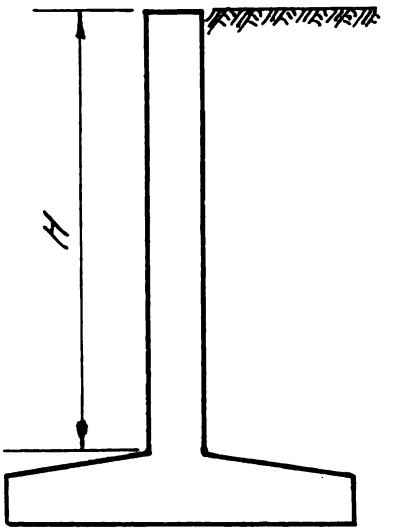

Fig. 42

vertical surface which [illegible]

[illegible] type of wall is shown in Fig. [illegible]

[illegible] the vertical wall [illegible] greater than [illegible] feet, it will be [illegible] to use the counterforted type. In this type the vertical wall is supported at intervals by triangular buttresses or counterforts.

These counterforts act as cantilevers and are securely tied to both the vertical wall and the base. The projecting toe of the base is a cantilever while the inner portion is a slab supported by the counterforts. The vertical wall is usually treated as slabs partly continuous and uniformly loaded.

Walls for Retaining Water -- Retaining walls built to resist water pressure follow the same general principles, but here matters are somewhat simplified because there is no variation due to weight or angle of repose and the pressure can be accurately determined when the depth of the water is known. The weight of a cubic foot of water is generally taken as 62½ lb., so the pressure in pounds per square foot against the wall will equal the depth of the water in feet multiplied by 62½. The pressure varies directly as the depth, being zero at the top and in this manner at the bottom, and the center of the whole pressure will be situated at a level of one-third the height ($\frac{H}{3}$) above the base.

A section of a wall to retain water is shown in Fig. 43.

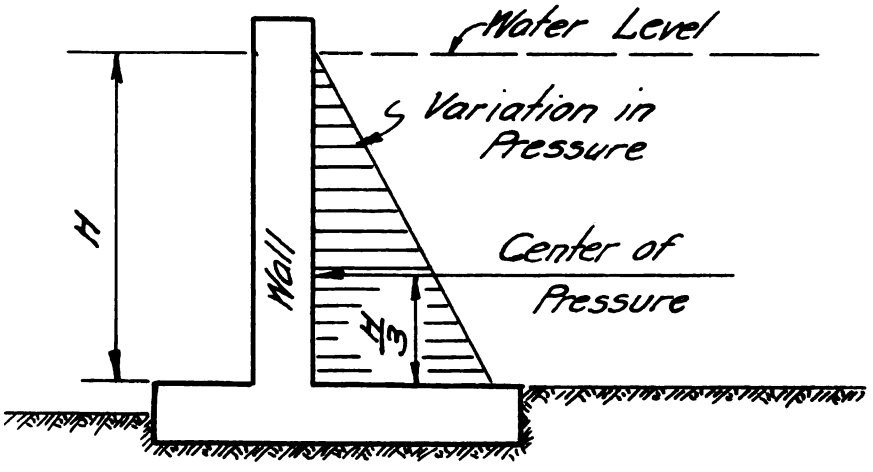

Fig. 43

[illegible]	[illegible]
[illegible]	[illegible]
[illegible]	[illegible]
[illegible]	[illegible]
[illegible]	[illegible]
[illegible]	[illegible]
[illegible]	[illegible]
[illegible]	[illegible]
[illegible]	[illegible]

occur

The variation in pressure is indicated by the slope of the line and the center of the hole pressure is shown by a distance of [illegible] from the base of the [illegible] of the tank [illegible]. The total pressure [illegible] will equal the total pressure [illegible] is equal to $\frac{62.4 \times H}{2} \times \frac{[illegible]}{2}$. The pressure of water varies directly as the depth, and is in no way influenced by the shape or size of the tank or other vessel which contains it. In other words, the pressure per sq. ft. on the walls of a tank 10 ft. square by 6 ft. deep is the same as that on the walls of a tank 100 ft. square by 6 ft. provided both are filled to the same depth, and the total pressure is to be taken at the depth of the water.

The variation in pressure is indicated by the shaded triangle and the center of the whole pressure is shown at a distance of $\frac{H}{3}$ from the base which is at the center of gravity of the triangle. The resultant overturning moment at the bottom of the wall will equal the total pressure when multiplied by $\frac{H}{3}$ is equal to

$$\frac{62\frac{1}{2} \times H}{2} \times \frac{H}{3}.$$

The pressure of water varies directly as its depth, and it is not influenced by the shape or size of the tank or other vessel which retains it. In other words, the pressure per sq. ft. on the walls of a tank 10 ft. square by 6 ft. deep is exactly the same as that on the walls of a tank 100 ft. square by 6 ft. deep, provided both are filled with water, and the only way to get a reduced pressure is to reduce the depth of the water.

[illegible]

[illegible]	[illegible]
[illegible]	[illegible]
[illegible]	[illegible]
[illegible]	[illegible]
[illegible]	[illegible]
[illegible]	[illegible]
[illegible]	[illegible]
[illegible]	[illegible]
[illegible]	[illegible]
[illegible]	[illegible]

[illegible]

[illegible]

n

occur

ary

1 st

[illegible]

fire in order to relieve [illegible]

[illegible].

As a general rule, [illegible] supplied [illegible], but occasionally [illegible] layers 12 in. which [illegible]

[illegible]

[illegible] qu[illegible]

[illegible] ir [illegible] as [illegible]

[illegible]

[illegible] setting [illegible].

[illegible] -- [illegible]

+

c

ce

on

G

a

+

[illegible]

[illegible]

[illegible] u

[illegible]

[illegible] a

[illegible]orter. But contamination with sulphur often makes it dangerous, as explained above.

Having now considered the qualities of cement, fine aggregates, and coarse aggregates, we may now consider the general principles of proportioning sand, stone, and cement, because production of a good concrete depends not only upon using the best materials, but also upon the best combination of mixture which will give the minimum voids, that is the densest mixture.

Voids -- Concrete can be considered as a mass of stones having certain spaces or voids between them. These voids are then filled with sand, which in turn contains voids. The voids in the sand are not so obvious as those between the stones, but in fact there is often about the same proportion of voids in sand as in the stone. The voids in the sand are finally filled with cement.

Now the main question is how to determine the voids contained in the sand and stone. A good method is to make a few trial mixtures of several different proportions and to find the voids in each. Thus take one part of sand mixed with $1\frac{3}{4}$, 2, and $2\frac{1}{4}$ parts of stone, and a vessel of about 3 cubic feet content, having a depth of about twice its diameter, and this may be filled with each of these mixtures in turn. If the voids in

each case are then filled in with water, and this water measured, then the mixture requiring the addition of least water to fill up to the top surface is the densest of the three and has the least voids. Another method of finding out which one is the densest mixture among those three is to weigh them separately. The heaviest one will be the one containing the densest mixture. Generally about twice as much stone is required as sand for the best mixture.

The quantity of cement must be sufficient to fill all interstices and to form an adhesive material between all particles. The cement should not have a volume less than one half of the sand, and more may be desirable. It should be noted that whatever the proportions of mixing may be, the materials are always measured by volume and not by weight because of the greater ease this way and the varying density of the stone aggregates.

It is impossible at present to make a concrete entirely without voids, because when the concrete is mixed with water in the mixing, this water represents a considerable volume. Although part of this water enters into chemical combination with the cement, the larger part does not, but subsequently evaporates and is replaced by air. It becomes clear from this that an excess of water in concrete reduces the strength because of these interstitial voids. So dry mixtures have greater strength than moister ones and it should be mixed as dry as possible and limited only by ease of mixing and placing.

With insufficient water, curiously enough, lack of density also results because the sand and cement particles have not

sufficient water to act as a lubricant, so as to ease them into the voids between the larger particles, and therefore they acquire less intimate contact.

Watertight Concrete -- Probably no concrete ever has been, nor ever will be made that does not contain a remaining small percentage of voids. But for all ordinary purposes concrete can be made practically watertight. The simplest way of doing this is to so proportion well graded materials that the voids will be reduced to the lowest possible minimum. In other words, the watertight concrete is simply a denser concrete made in the ordinary way but with special care used throughout to ensure uniformity of the best practise in mixing the placing and ramming.

To produce a watertight concrete it is absolutely necessary to note the following points:

(1) The proportion of mix should not be leaner than 1:2½:4½, however a 1 : 2 : 3 mix is preferable.[1]

(2) Only clean, uncoated aggregates should be used, and the proportion of these aggregates should be well balanced in order that the voids will be reduced to the lowest possible minimum.

(3) The concrete must be thoroughly mixed. Each batch should be carefully measured so that the concrete in all parts of the structure are of the same constitution.

(4) In placing the concrete we must see that it is well tamped and we should guard against rock pockets and

---

1 Engineering Bulletin, Purdue University, Vol. XVI, No. 1 (January, 1932) pp. 103

seams between successive batches.

(5) The joints between each successive days' work should first be gone over with a hammer and chisel or compressed air chisel and then should be covered with ½ in. of mortar composed of two parts of sand to one of cement on the old work and then followed by the concrete on to this at once.

(6) Keep the concrete damp for several days.

The Mixing of Concrete -- (a) Hand mixing: The mixing of concrete by hand will give good results, if carefully and thoroughly done. This method of mixing is very economical for small jobs, where only a few batches are needed. The batches in hand mixing should be small, preferably less than one cubic yard, and of such a size that all concrete in any one batch can be put in place in less than half an hour (before initial set occurs).

In mixing a batch, the mixing platform, preferably about 7 x 12 ft. or larger in size should be made of tongued and grooved plank, 2 in. thick and must be set level in a convenient place and the fine aggregate (sand) is first measured and placed on the mixing platform in a flat pile. The cement after measuring is then evenly spread over the top of the fine aggregate. (only one measuring box should be allowed in use to prevent mistakes). Then two workmen mix the cement and the fine aggregate by turning the mix two or three times, until the material is of uniform color. In this work the two should stand facing each other at one end of the pile and they work their shovels close to the platform diagonally towards each other, turning the shovels when

they meet. There is a knack to this shovel work, which may be acquired by experience. If the batch is somewhat larger than two men can start at each end of the pile and work towards the center.

After the cement and fine aggregate are mixed, the mass is leveled off and the coarse aggregate measured, wetted, and spread over the pile. The batch is again turned two or three times, and then "troughed" or "ditched" in the center, and then the mixing water added by pouring into the center. (This water should be carefully measured so that the same amount can be used for each batch of the same size). Then the edges of the dry materials must be turned over into the water, care being taken to prevent the escape of any water. After the materials have been turned into the water, the whole batch is turned over several by the spade until it appears to have a uniform consistency, usually about 5 turnings are required for thorough mixing, but most workmen stop after two or three turnings. When one man does the mixing, it is convenient for him to mix the dry materials thoroughly in a box with a hoe, after which the water is added and the mass thoroughly mixed again. The mixing platform and whatever tools are used should be washed clean at the end of the day's work.

(b) Machine mixing: Machine mixing of concrete is usually much better, quicker, and more economical than hand mixing, and should be required when the amount of work is sufficient to make machine mixing economical.

There are two kinds of machine mixer, continuous and batch. The continuous mixer is rarely used, because the batch

ing. In a batch mixer, a batch of materials is added to the machine, then mixed and discharged, and the cycle repeated for succeeding batches. The time required for mixing depends on the type, speed and condition of the machine, and varies for different machines. Most machines are designed to mix the materials in about one minute. Therefore in any machine mixer, the time of mixing should not be less than one minute. Mixing for a longer time, even up to 30 minutes will not harm the concrete.

At the end of each day's work, the mixer should be thoroughly washed and cleaned out. Any cake concrete adhering to the drum or blades should be broken loose and removed.

The materials used must be also carefully and accurately measure , if consistent results are to be obtained. The cement and the aggregates should be measured by measuring boxes and the water also measured. Measuring aggregates by the shovelful should not be permitted.

Placing of Concrete -- It is absolute necessary that the concrete be carried from the mixer to the form before the initial set has occured; that no part of the concrete will be lost in transporting; and that no segregation of the materials be allowed to take place. These points must be observed and then also a careful deposition of the concrete in the forms is necessary, because no faults in the mix or in the placing can be corrected later after setting.

Before depositing the concrete in the form, any dirt or other debris should be removed from the forms, and the surfaces of the forms thoroughly wetted or oiled.

The time required for transporting and depositing should not be more than 30 minutes. On large jobs the concrete is transported by carts, barrows, buckets on cableways, bottom dumps and spouts. Whatever method be used, the flow of the concrete from the mixer to the form should be continuous, until that particular section of the form has been filled. It is advisable to keep the surface of the concrete approximately horizontal in walls, columns, or footing forms while the junction plane in beams or slabs between batches should be nearly vertical. As nearly as practical work should be completed in units before night-fall and for special work a non-stop mixing may be needed.

After the concrete has been deposited in the form, it should be thoroughly compacted. The tools used are shovels, spades, rods, tamping bars, etc. Spading the concrete next to the surface of the form tends to make a smooth surface without air pockets. The concrete must be thoroughly worked into the corners of the forms and around the reinforcement. Tamping and rodding tend to remove air voids and increase the density and strength of the concrete. If the mix is too wet or sloppy, too much tamping may tend to cause separation of the materials. The compacting of concrete in thin forms may be helped by hammering the outside of the forms opposite the freshly deposited concrete. The forms should fit so closely in their joints between the boards so as not to let cement or even water escape.

Retempered or reduced concrete or mortar that has lost part of its initial set should not be allowed to be placed in the form.

[illegible]

TABLE X

AREAS, WEIGHTS, PERIMETERS & SPACING OF BARS

SIZE IN INCHES	AREA OF ONE BAR SQ. IN.	WEIGHT OF ONE BAR PER FOOT	AREA OF STEEL AND ΣO PER FOOT, SPACING AS SHOWN															
				3½"	4"	4½"	5"	5½"	6"	6½"	7"	7½"	8"	8½"	9"	10"	11"	12"
3/8" φ	.1104	.375	ΣO	4.03	3.53	3.14	2.83	2.57	2.35	2.17	2.02	1.88	1.76	1.66	1.59	1.41	1.29	1.18
			AREA	.38	.33	.29	.26	.24	.22	.20	.19	.18	.16	.15	.14	.13	.12	.11
½" φ	.1963	.667	ΣO	5.38	4.71	4.19	3.77	3.42	3.14	2.90	2.69	2.51	2.36	2.22	2.09	1.88	1.73	1.57
			AREA	.67	.59	.52	.47	.43	.39	.36	.33	.31	.29	.28	.26	.23	.21	.20
½" □	.250	.850	ΣO	6.86	6.00	5.33	4.80	4.36	4.00	3.69	3.43	3.20	3.00	2.83	2.67	2.40	2.18	2.00
			AREA	.86	.75	.67	.60	.55	.50	.46	.43	.40	.37	.35	.33	.30	.27	.25
5/8" φ	.3068	1.043	ΣO	6.73	5.89	5.24	4.72	4.28	3.93	3.62	3.37	3.14	2.95	2.77	2.62	2.36	2.16	1.96
			AREA	1.05	.92	.82	.73	.67	.61	.55	.52	.49	.46	.43	.41	.37	.34	.31
¾" φ	.4418	1.502	ΣO	8.06	7.07	6.27	5.64	5.13	4.71	4.34	4.03	3.76	3.52	3.32	3.14	2.82	2.59	2.36
			AREA	1.51	1.32	1.18	1.06	.96	.88	.81	.76	.71	.66	.62	.59	.53	.48	.44
7/8" φ	.6013	2.044	ΣO	9.42	8.25	7.33	6.60	6.00	5.50	5.07	4.71	4.40	4.12	3.88	3.66	3.30	3.02	2.75
			AREA	2.06	1.80	1.60	1.44	1.31	1.20	1.11	1.03	.96	.90	.85	.80	.72	.66	.60
1" φ	.7854	2.670	ΣO	10.77	9.42	8.38	7.55	6.85	6.28	5.80	5.38	5.02	4.71	4.44	4.18	3.77	3.45	3.14
			AREA	2.70	2.35	2.10	1.88	1.71	1.57	1.45	1.35	1.26	1.18	1.11	1.05	.94	.86	.78
1" □	1.000	3.400	ΣO	13.70	12.00	10.66	9.60	8.78	8.00	7.38	6.86	6.40	6.00	5.65	5.33	4.80	4.36	4.00
			AREA	3.43	3.00	2.67	2.40	2.18	2.00	1.85	1.71	1.60	1.50	1.41	1.33	1.20	1.09	1.00
1⅛" □	1.2656	4.303	ΣO	15.44	13.50	12.00	10.80	9.82	9.00	8.30	7.72	7.20	6.75	6.36	6.00	5.40	4.91	4.50
			AREA	4.34	3.80	3.38	3.04	2.76	2.53	2.34	2.17	2.03	1.90	1.79	1.69	1.52	1.38	1.27
1¼" □	1.5625	5.313	ΣO	17.14	15.00	13.33	12.00	10.90	10.00	9.23	8.57	8.00	7.50	7.06	6.66	6.00	5.46	5.00
			AREA	5.36	4.69	4.17	3.75	3.41	3.13	2.89	2.68	2.50	2.34	2.21	2.08	1.87	1.70	1.56

ROOM USE ONLY