EFFECTS OF
ULTRASONICS ON MILK

THESIS FOR THE DEGREE OF M. S.
MICHIGAN STATE COLLEGE

J. LEON NEWCOMER
1955

This is to certify that the

thesis entitled

"Effect of Ultrasonics on Milk"

presented by

J. Leon Newcomer

has been accepted towards fulfillment
of the requirements for

M.S. degree in Agr. Engr.

Carl W. Hall
Major professor

Date May 16, 1955

O-169

EFFECTS OF ULTRASONICS ON MILK

By

J. Leon Newcomer

AN ABSTRACT

Submitted to the School of Graduate Studies of Michigan
State College of Agriculture and Applied Science
in partial fulfillment of the requirements
for the degree of

MASTER OF SCIENCE

Department of Agricultural Engineering

Year 1955

Approved by Carl W. Hall 5/26/55

THESIS

Numerous investigators have shown that whole milk can be homogenized by irradiation with ultrasonic waves. Individual researchers have reported on the various conditions that are necessary for this phenomena to occur. In consideration of these factors a hypothesis was developed wherein it was proposed that the efficiency of homogenization by ultrasonic waves would be substantially improved if a direct electric current were passed through the milk simultaneously with irradiation. A technique was developed and experiments were performed to test those deductions. The results showed that there was a correlation between the current strength and the efficiency of homogenization. An increase in current increased the efficiency to a maximum value beyond which an increase in current reduced the efficiency.

It is known that homogenization by the conventional, high pressure method reduces the protein heat stability of milk. Using the same technique adopted for testing the hypothesis concerning the relative effect of an electric current along with ultrasonic irradiation it was found that the protein heat stability remained unchanged.

The literature indicates that several of the conditions necessary for homogenization by ultrasonics are identical with those necessary for killing bacteria. Consequently, the same hypothesis developed for improving the efficiency of homogenization seemed applicable for an improved bactericidal effect. It was found that there was no substantial correlation between current strength and bactericidal effect so far as the total bacteria population was concerned. A correlation was found between the destruction of the coliform group and the current strength.

EFFECTS OF ULTRASONICS ON MILK

By

J. Leon Newcomer

A THESIS

Submitted to the School of Graduate Studies of Michigan
State College of Agriculture and Applied Science
in partial fulfillment of the requirements
for the degree of

MASTER OF SCIENCE

Department of Agricultural Engineering

1955

6-2[illegible]

ACKNOWLEDGEMENTS

Although bibliographies and footnotes indicate many of the sources of information, such devices can not do justice to all of the persons who have been both instrumental in guiding our thinking and helpful throughout the project. We find it a pleasure to note a few of these persons here by name.

The author wishes to express his sincere thanks to Dr. Carl W. Hall for his inspirational supervision and continued ready help in this investigation.

He is also indebted to Professor A. W. Farrall and his entire staff for making materials, equipment, and facilities available for this study.

The writer expresses his appreciation to Dr. Jay Robert Brunner of the Department of Dairy for his generous assistance in certain technical guidance, and for the use of laboratory facilities.

Additionally, to Dr. Egon A. Hiedemann and to Mr. Robert Bruce Miller of the Department of Physics is extended a word of thanks for their patient and courteous council and constructive suggestions.

Finally, sincere appreciation is extended to Dr. Clyde Smith of the Department of Microbiology and Public Health for his valuable assistance and guidance in the bactericidal phase of the undertaking.

TABLE OF CONTENTS

Page

INTRODUCTION 1

REVIEW OF LITERATURE 5

RESUME OF LITERATURE 10

HYPOTHESIS 12

OBJECTIVES 16

PART I: HOMOGENIZATION 17

- Scope of Study 17
- Criteria for Homogenization 18
- Performance Index 18
- Apparatus 19
- Procedure A 23
- Procedure B 28
- Procedure C 33
- Procedure D 33
  - Results of Procedure D 42
- Summary and Conclusions 43

PART II: ENERGY REQUIREMENTS FOR HOMOGENIZATION 45

- Procedure 45
- Results 45
- Summary and Conclusions 47

TABLE OF CONTENTS (Cont.)

Page

PART III: HEAT STABILITY 48

Procedure 48

Criteria for Heat Stability 49

Testing Procedure 49

Results 50

Summary and Conclusions 50

PART IV: BACTERICIDAL PROPERTIES 51

Scope of Study 51

Apparatus 51

Procedure 53

Results 54

Summary and Conclusions 59

REFERENCES CITED 60

LIST OF FIGURES

FIGURE PAGE

1. Principal apparatus 20
2. Disassembled view of transducer 20
3. Schematic diagram of principal apparatus 21
4. Section through transducer unit showing irradiation arrangement for procedure A 24
5. Apparatus used in procedure A 25
6. Electrode, glass test tube and tube holder used in procedure A 25
7. Plot of data given in Table I 27
8. Apparatus used in procedure B 29
9. Electrode, metal irradiation tube, and tube holder used in procedure B 29
10. Section through transducer unit showing irradiation arrangement for procedure B 30
11. Plot of data given in Table II 32
12. Section through transducer unit showing irradiation arrangement for procedure C 34
13. Apparatus used in procedure C 35
14. Sample being irradiated directly in transducer . . 35
15. Plot of data given in Tables III and IV 38
16. Photomicrograph of untreated milk 39
17. Photomicrograph of milk treated with ultrasonics alone 39

LIST OF FIGURES (Cont.)

Page

18. Photomicrographs of milk treated simultaneously with an electric current and ultrasonics 39
19. Section through transducer unit showing irradiation arrangement for procedure D 40
20. Apparatus for procedure D 41
21. Sintered glass gas diffusion tube used in procedure D 41
22. Electric current output of generator versus power input 46
23. Apparatus used for the bactericidal work 52
24. Electrodes, glass tube and tube holder used for the bactericidal work 52

LIST OF TABLES

TABLE		PAGE
I.	Efficiency of homogenization when irradiated in a glass tube with two electrodes	26
II.	Efficiency of homogenization when irradiated in a metal tube	31
III.	Efficiency of homogenization when the milk was irradiated directly in the transducer bowl: the transducer element being the (+) electrode and the probe being the (-) electrode	36
IV.	Efficiency of homogenization when the milk was irradiated directly in the transducer bowl: the transducer element being the (-) electrode and the probe being the (+) electrode	37
V.	Reduction of bacteria versus current strength through milk, and length of exposure, series 1	55
VI.	Reduction of bacteria versus current strength through milk, and length of exposure, series 2	56
VII.	Reduction of bacteria versus current strength through milk, and length of exposure, series 3	57

INTRODUCTION

High-frequency inaudible sound waves, "ultrasonics"*, of great intensity are able to produce a great variety of phenomena pertaining to the realm of colloid chemistry, as first shown in 1927 by R. W. Wood and A. L. Loomis (49). Later it was found that substantially the same phenomena may be likewise obtained with low-frequency sound waves, provided, and this is the fundamental difference, their intensity is sufficiently high.

It must be emphasized that there is no fundamental physical difference between ultrasonics and audible sound. The distinction is an arbitrary one to distinguish between sound in the audible range 16 to 16,000 cycles per second and higher frequency sound waves from 16,000 to 10^9 cycles per second, another arbitrarily selected limit. Above this limit the term hypersonics applies.

Sound waves of great intensity may bring about many kinds of phenomena, such as peptization, the mutual emulsification of two bulk liquid phases, the disintegration of

---

* In the early literature concerning this subject the term "supersonics" and occasionally "suprasonics" was used by some authors instead of "ultrasonics." Since about 1935, the term ultrasonics is most frequently used.

certain solids, the depolymerization of high-molecular substances, coagulation of certain suspensions, production of heating effects, production of chemical reactions, destruction of bacteria, stimulation of plant growth, etc.

Though there are no fundamental physical differences between sound waves of low, medium and high frequencies, great differences exist in the ease with which high intensities may be produced and the ease with which the sonic energy may be transmitted to the system under investigation. Another important fact is that the absorption of high-frequency waves is much stronger than that of lower frequencies. At extremely high frequencies the energy losses due to absorption become excessive. Thus, very little has been done in colloidal substances, with frequencies of more than a million cycles per second. With lower frequencies another difficulty arises. The amplitudes necessary to transmit a given quantity of energy at low frequency are much greater than those at higher frequencies. The greater portion of investigations concerning such phenomena as mentioned in the previous paragraph has been conducted in the ultrasonic region between 20,000 and 1,000,000 cycles per second, with the region from 150,000 to 600,000 cycles per second receiving the greatest attention.

Perhaps the foregoing is sufficient to establish in a general manner a clear picture of some of the properties of ultrasonics, including some of their distinctive characteristics and a brief mention of physical-chemical-biological phenomena attributed to them. Now we shall turn our attention to a more specific aspect.

The writer, having an experience background in milk and milk products processing and their attendant technical problems, became interested in some of the pioneering attempts by Chambers and Gains (17), Harvey and Loomis (25), and by Liu and Yen (32), to effect certain physical-chemical and biological changes in milk and in various manufactured milk products, principally concentrated milk. The writer's attention was especially drawn to investigating what effects ultrasonics might have upon the protein heat stability, fat dispersion (homogenization) and sterilization. Not only did the work of these early investigators indicate certain practical possibilities but subsequent work of more recent researchers, namely, LeGally and Patterson (31), Loo and Carleton (33), Brown (12), Fox and Griffing (20), and others (3), (2), gave further impetus to this interest. Additionally, most of the previous work was done prior to the availability of focusing ultrasonic transducer elements whereby a considerably higher energy intensity level can be transmitted to the substance under investigation. Consequently, if there is a threshold intensity level necessary to effect physical-chemical-biological alterations then it is certainly well to reinvestigate some of the earlier work but with the advantages attendant to higher energy levels of irradiation.

Although the foregoing was the initial reason for undertaking this work, the author, after having reviewed the extensive literature on the subject, developed what is believed to be a unique experimental technique. This supplanting basis for the study is more fully developed in the section "Hypothesis".

REVIEW OF LITERATURE

Ultrasonic waves can be used for a great variety of purposes and general accounts of these have been given by Boyle (6), Hopwood (29), Freundlich (21), Chambers (16), Campbell and Schoenleber (15) and others. More recently thorough treatments of production, measurement and application have been prepared by Carlin (18), Bergmann (5), Wood (48), Richardson (39), Vigoureux (46), and Cady (14).

A comprehensive review of the numerous applications of ultrasonics has been presented in an excellent manner by Sollner (42) and also has appeared in "Colloid Chemistry" edited by Alexander (1).

Emulsification by ultrasonic waves was first described by Wood and Loomis (49). However, they dealt principally with qualitative observations of the phenomena and reported little concerning quantitative values of optimum frequency, minimum energy requirements, physical conditions for efficient irradiation, etc.

Richards (37) showed that when benzene and water are placed in a test tube which has been previously wetted with water and the tube irradiated with ultrasonic waves of 300,000 cycles per second, the benzene phase immediately becomes cloudy, the water phase more slowly so and, eventually, the interface between the two liquids disappears. He found that emulsification occurs primarily at the wall in contact with benzene and not at the dineric interface. He emphasizes that these and other observations indicate clearly that the emulsification in a liquid occurs mainly at the walls of the containing vessel when they are wetted with the liquid dispersed.

Freundlich (22) has emphasized the importance of the presence of a gas phase in the substance being irradiated. Ultrasonic dispersion does not occur in vacuum, or a very poor emulsion forms which breaks immediately. He states that the nature of the gas is of no importance. Similar observations were reported by Sollner and Bondy (44, 43), and by Harvey (23) concerning the emulsification of oil-water systems and for organic systems generally, but with the following qualifications: when the system is in equilibrium with a gas phase, emulsification always occurs upon irradiation, provided this pressure is neither too high nor too low (17). According to Johnson (30), this must not exceed a certain critical value whose value for water saturated with air is about 4.5 atmospheres.

Boyle and Lehmann (7, 9, 8) were the first to observe that when ultrasonic waves of comparatively low energy are sent through liquids, gas bubbles are formed. Further investigations by Boyle and his co-workers (10) showed that these bubbles are produced by the union of microscopically small bubbles already present in a liquid. Boyle and Taylor

(9) recognize as a further cause of bubble formation the phenomenon of cavitation, which consists in the formation of hollows by the liquid being torn apart. The gases dissolved in the liquid are able to escape into the spaces formed by cavitation produced in liquids by ultrasonics.

Lord Rayleigh (36) calculated the pressures which may occur when a vapor bubble collapses in a liquid and found that many thousands of atmospheres may be obtained locally in this way.

Bondy and Sollner (44) deal at length with the theory of cavitation produced in liquids by ultrasonics. In particular, they regard cavitation as responsible for the emulsifying action of sound waves.

More recent investigations indicate that it is also dependent on the frequency. A mathematical theory of cavitation by ultrasonics has recently been presented by Noltingk and Neppiras (34, 35) who conclude that all cavitation phenomena will diminish and finally disappear as the frequency is raised.

Though there are no fundamental physical differences between sound waves of low, medium and high frequencies, great differences exist in the ease with which high intensities may be produced and the ease with which sound energy may be transferred to the system under investigation. Additionally, Carlin (18) states that frequency sometimes causes a difference in the ultrasonic action. A particular effect may take place at a high frequency and not at a low one. According to Alexander (1) high sound intensities are used for most colloid work, e.g., to produce emulsification an intensity of 10 watts per square centimeter is necessary. Others too have suggested that seemingly there is a threshold energy level necessary to effect physical-chemical changes (13, 11).

In pure liquids and in homogeneous solutions the thermal effect is due to the absorption of sound energy which is intimately connected with the viscosity of the liquid. The problem of heat of evolution has been treated by Richards (38) and measurements with different substances have been reported by Dognon and Biancani (19).

In contrast to the usual technical emulsification, increasing the temperature of the two liquids detracts from the efficiency of emulsification by the aid of ultrasonics. Rise in temperature militates against cavitation.

That intense irradiation may lead to a destruction of the organized cell structure and even to its complete disintegration, was first shown by Wood and Loomis (49). Other work in this direction has been conducted by Harvey and collaborators (24, 23, 28, 25, 26, 27), by Chambers and collaborators (17), Yen and Liu (50), LeGally and Patterson (31), Williams and Gaines (47), and Beckwith and Weaver (4).

Schmitt and Uhlemeyer (41) found that the chief reason for the bactericidal effect of ultrasonics is the formation of gas bubbles (cavitation). Johnson (30), and Liu and Yen (32) also came to this conclusion. Schmitt, Johnson and Olsen (40) reported that strong ultrasonic irradiation of water containing oxygen leads to the formation of H_2O_2. H_2O_2 is known to have a bactericidal action.

RESUMÉ OF LITERATURE

The review of the literature pertaining to the properties of ultrasonics and their effects on matter reveal the following principal characteristics.

1. Ultrasonics of sufficient intensity can cause emulsification.
2. Apparently emulsification occurs only when cavitation is present.
3. Cavitation by ultrasonics depends upon the presence of a dissolved gas phase, and nuclei for centers of cavitation.
4. The kinds of gases are not important.
5. The smaller the gas bubble the greater the cavitation. Large bubbles act as a cushioning medium and decrease the collapsing pressure.
6. A gas barrier is an efficient absorber of ultrasonic energy.
7. Ultrasonics produce degassing of the substances being irradiated.
8. Emulsification is particularly strong at the walls of the containing vessel and to a lesser extent within the interior of the liquid.
9. Ultrasonics cause coagulation.

10. Coagulation apparently occurs within the volume of the liquid and not at the container walls.
11. Emulsification preceeds coagulation but eventually coagulation and emulsification occur simultaneously and seemingly at the same rate.
12. A proposed reason for bactericidal action is attributed to cavitation .
13. Ultrasonic waves produce H_2O_2 from dissolved oxygen content of the solution.

The following characteristics pertaining to certain properties of milk were taken from Sommer (45).

1. Butterfat globules are charged negatively.
2. Colloidal milk proteins are charged negatively.
3. An increase in the negative charge on the fat globule decreases its creaming ability by reducing aggregation into larger and more buoyant clumps.
4. Heat stability of milk is increased if the charge is increased.

HYPOTHESIS

With the foregoing phenomena and characteristics in mind, consider the following arguments:

If emulsification in an ultrasonic field depends upon cavitation and cavitation depends upon the presence of dissolved gases and furthermore if ultrasonic irradiation degasses the substance, then perhaps the extent of emulsification is limited to how far it can proceed prior to the total expulsion of the supporting medium, i. e., dissolved gas.

Restated, the efficiency of emulsification is limited by the original dissolved gas content and the rate of its expulsion. If the time element necessary to effect complete emulsification of a given quantity of the dispersed phase (fat) is greater than the time element for expulsion of the gas content, complete emulsification can not be attained.

Consequently, it follows that the efficiency might be improved if means were provided for maintaining a suitable dissolved gas content of satisfactory bubble size.

Two methods for maintaining a required gas content are possible: 1) by introducing a flow of some inert gas through a capillary or diffusion tube into the volume of substance being irradiated, or 2) by producing a gas directly within the substance by electrolysis, e. g., applying a direct current potential to electrodes within the substance.

Recalling the observation that emulsification is particularly effective at the boundary surface of the containing vessel leads one to select the electrolytic method in preference to the gas diffusion method since in the former, one can, by using a metallic container for the solution and letting it be one electrode and a centrally situated probe be the other electrode, produce a regulated gas evolution at the container surface and thus establish a constant source of gas bubbles (nuclei) in controlled quantities at the surface where emulsification is more pronounced.

Another conceivable advantage of the electrolytic procedure over the gas diffusion method concerns the dimensions and distribution of the gas bubbles. Even with the finest pore sintered glass diffusion apparatus the gas bubble would undoubtedly be considerably larger and less evenly distributed over the effective surface than would be the case with a gas evolved electrolytically over the surface.

Not only should the high concentration of gas bubbles originating at the container wall favorably effect the phenomena of emulsification but a further advantage is conceivably established. Since the gas barrier is an efficient absorber of ultrasonic energy it should reduce the ultrasonic waves from being transmitted to the interior which should tend to minimize the phenomena of coagulation in the interior volume.

Next consider the reported observation that fat particles carry a negative charge. If the vessel is made the positive electrode and the interior probe the negative one, the negatively charged fat globules shall migrate towards the container walls in which region is sustained the conditions most favorable for the emulsification of the fat globules.

On the basis of the foregoing assumptions, it is predicted that if, by electrolytic means, a suitable gas phase is established and maintained within the milk during exposure to a sufficiently intense ultrasonic irradiation, the effectiveness of such treatment will be greatly enhanced. On the premise of this hypothesis the following experiments were designed and conducted to test its validity.

Now consider how the conditions enumerated in this hypothesis might also effect the bactericidal properties of ultrasonics. If the bactericidal properties of ultrasonics depends upon cavitation, which in turn depends upon the presence of dissolved gases, and furthermore, if ultrasonic irradiation degasses the substance, perhaps the extent of the bactericidal property is limited to how far it can proceed prior to the total expulsion of the supporting medium, i.e., dissolved gas.

If a strong ultrasonic irradiation of a solution containing oxygen leads to the formation of H_2O_2 and a supply of oxygen is maintained by electrolysis then a controllable quantity of H_2O_2 should be sustained. Additionally, if H_2O_2

has bactericidal properties then a situation for maximum bactericidal action by both cavitation and by H_2O_2 is established. We might thus conclude that the conditions considered in formulating the hypothesis concerning homogenization are also favorable for combining the two contributors (gas and H_2O_2) to bactericidal action by ultrasonics.

OBJECTIVES

The objectives of the study are to:

1. Test the hypothesis that a direct electric current passed through a sample of whole milk while simultaneously being irradiated by ultrasonic energy, will increase the efficiency of homogenization.
2. Determine the energy requirements necessary for homogenization with ultrasonics.
3. Test the hypothesis that a direct electric current passed through a sample of whole milk simultaneously with ultrasonic irradiation will increase the bactericidal effect of ultrasonics.
4. Ascertain the effects of ultrasonic irradiation upon protein heat stability.

PART I: HOMOGENIZATION

Scope of Study

Pasteurized whole milk having a 3.8 percent butter fat content was used throughout this phase of the work. All samples were irradiated at an ultrasonic frequency of 430 kilocycles.

Procedures A, B, and C were designed to investigate the effect of the passage of an electric current through the sample simultaneously with ultrasonic irradiation.

Procedure D was designed to investigate the effect of the passage of an inert gas through the sample simultaneously with ultrasonic irradiation.

Since the passage of an electric current through milk produces an evolution of gases, procedure D was incorporated to learn whether the effect of an electric current on homogenization was peculiar to the presence of an inert gas or to the passage of an electric current per se.

In all cases the milk was preheated to 150° ± 2° for 5 minutes prior to ultrasonic treatment. This constant temperature was selected to eliminate the temperature variable and to treat milk at the temperature commonly used in commercial homogenization.

Criteria for Homogenization

In selecting a criteria for homogenization the various standard methods were first considered with the thought of using one of them herein . Even the simplest of these entail considerable time for their determination. It was decided, therefore, that since the study was chiefly concerned with comparative results rather than absolute values a simpler procedure could be satisfactorily adopted.

The method used was based on gravity separation. The tubes of treated samples, along with untreated controls, were observed for evidence of cream line (separation) after standing for 48 hours at 40° F. A sample was considered homogenized only if no trace of cream line was evident at the end of this period.

Additionally, several treated and untreated specimens were microscopically studied for comparative globule size, clumping and dispersion as a check on the gravity separation method.

Performance Index

Since the primary purpose of this portion of the work was to ascertain the influence of various factors upon the efficiency of homogenization and more especially the effect of an electric current in those regards, the obvious and most direct index was to relate the volume, in cubic centimeters,

of milk homogenized to the time, in minutes, required to produce homogenization and reported hereinafter as "Efficiency Factor" in c.c./min.

Apparatus

The basic apparatus for procedures A, B, C, and D, is shown in Fig. 1 and consists of an ultrasonic generator (A); transducer assembly (B), in which the samples are irradiated with 430 kilocycle, ultrasonic energy; watt-hour meter (C) to determine the actual input power to the generator; thermometer (D) to determine the temperature of the transmission medium in the transducer; dry cell batteries (E), the source of d.c. current passed through the milk; rheostat (F) to regulate the current passed through the milk; d.c. milliameter (G) to indicate the current passed through the milk. Milliameter (H) on the generator indicates the current strength of the ultrasonic energy to the transducer element. Since the physical dimensions of the barium titanate transducer element determines the ultrasonic frequency it is necessary to tune the generator output frequency to match the natural frequency of the transducer. This is done with dial (I). The output current of the generator is adjusted with dial (J). The ultrasonic energy is conducted from the generator to the transducer via coaxial cable (K). The output of the generator is reported in milliamperes and the current strength

Fig. 1. Principal apparatus.

Fig. 2. Disassembled view of transducer.

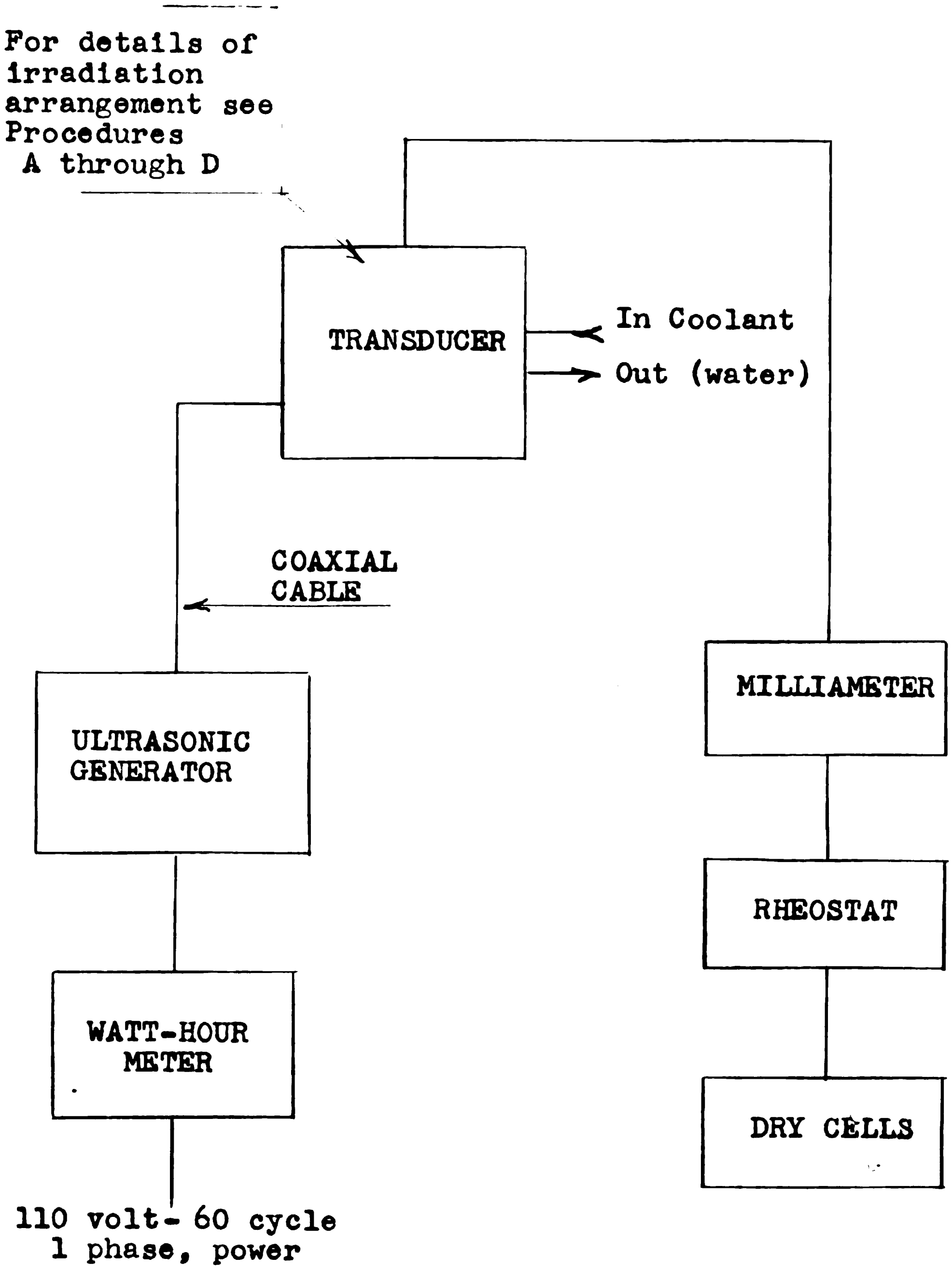

Fig. 3. Schematic diagram of principal apparatus.

through the milk sample is also reported in milliamperes. To minimize confusion the output current of the generator will be reported herein as M.A. while the current strength through the sample will be reported as m.a.

In Fig. 2 is shown a more detailed view of the transducer assembly. The cooling coils (A) are coiled around the inside of the upper portion (B) which fits into the lower portion (C) containing the focusing, barium titanate, transducer element (D).

The generator and the transducer are commercially built units having the following specifications:

Generator

Model: BU-204

Mfg. by: Brush Electronics Company, Cleveland, Ohio.

Power input: 115 volts, 6.5 amps, 660 watts, 60 cycle, single phase, A.C.

Power output: 250 watts, nominal, over frequency range of 100 K.C. to 1000 K.C.

Output frequency: Tuning drawer "A", 100 K.C. to 300 K.C.
Tuning drawer "B", 300 K.C. to 1000 K.C.
Note: tuning drawer "B" used for work reported herein.

Circuit: Self-excited Hartley oscillator.

Transducer

Model: BU-305 A-400

Mfg. by: Brush Electronics Company.

Type of element: Barium titanate ceramic bowl.

Resonant frequency: 430 kilocycles.

Element thickness: 6.10 m.m.

Area of concave surface: 71.0 cm^3.

Distance of focal point from bowl: 57.4 m.m.

Wavelength at resonant frequency:

In water or oil	3.4 m.m.
In glass	9.3 m.m.
In steel	13.3 m.m.

Acoustical impedence of element: $c = 2.47 \times 10^6$ gm/cm^2sec.

Procedure A

Milk was irradiated in a glass test tube both with and without the passage of an electric current through the sample. Distilled water was used in the transducer as a transmission medium between the transducer element and the test tube. The water temperature was controlled to 150°F ± 5° by passing tap water through the cooling coils. The test tubes were positioned in the transducer so that their bottoms were at the focal point of the ultrasonic beam. See Fig. 4.

Three variables were studied, namely, sample size, magnitude of the current through the sample, and output current of generator.

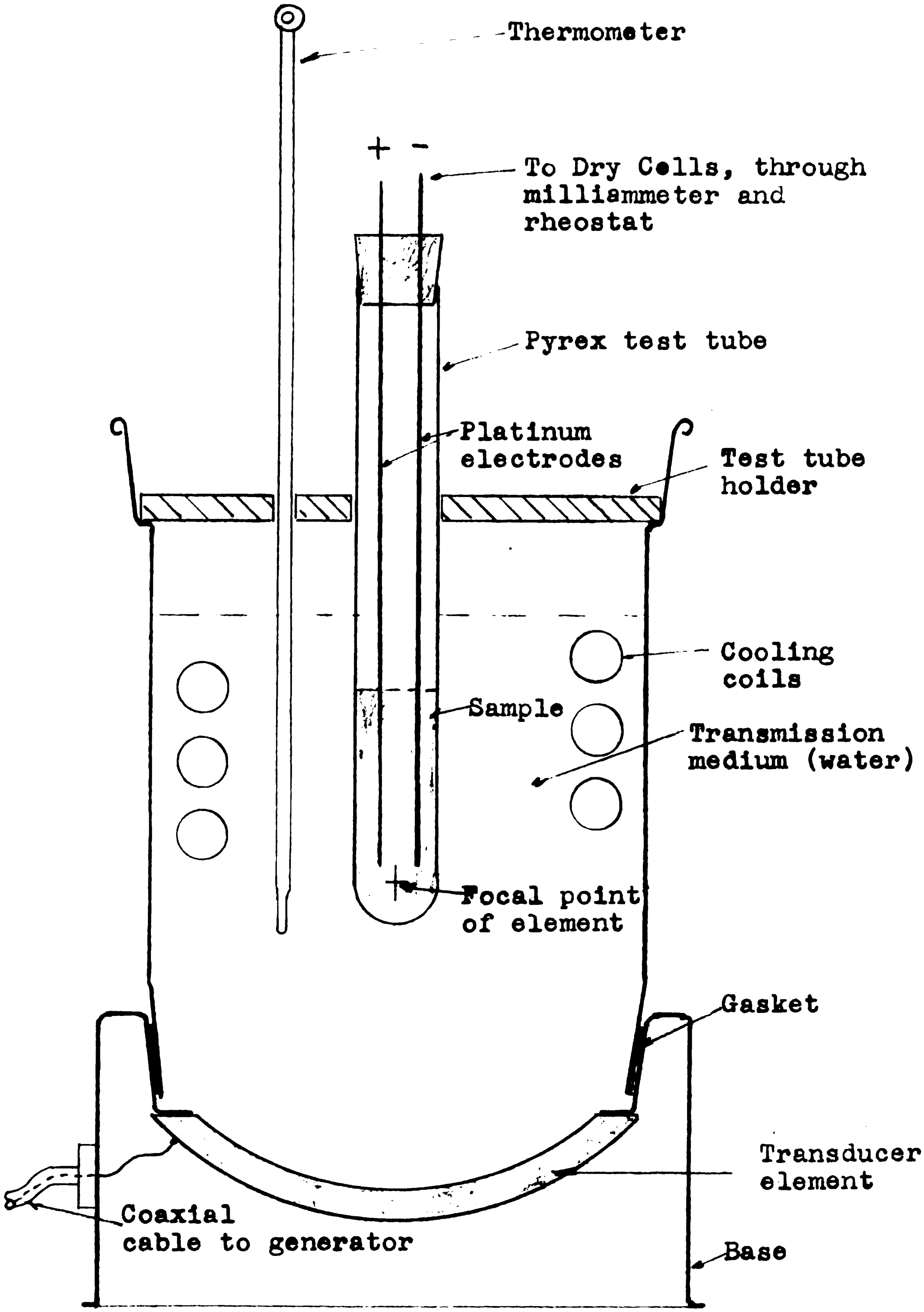

Fig. 4. Section through transducer unit showing irradiation arrangement for procedure A.

Fig. 5. Apparatus used in procedure A.

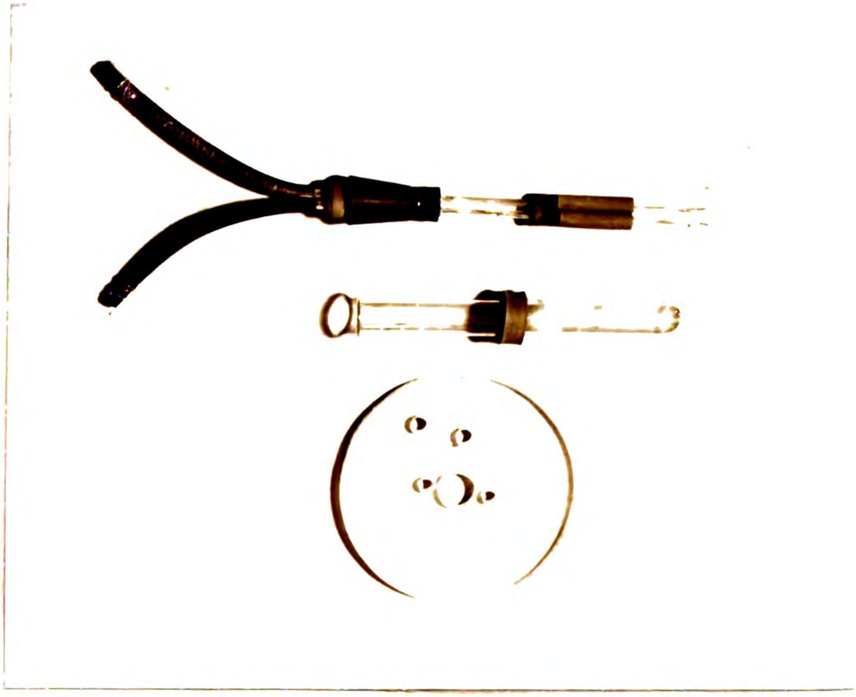

Fig. 6. Electrode, glass test tube and tube holder used in procedure A.

TABLE I

EFFICIENCY OF HOMOGENIZATION WHEN IRRADIATED IN A GLASSTUBE WITH TWO ELECTRODES

Sample Size	Current Through Sample	Efficiency Factor		
		Generator Output		
		200 M.A.	175 M.A.	150 M.A.
c.c.	milliamperes	c.c./min.	c.c./min.	c.c./min.
10	0.0	1.11	1.00	0.66
10	5.0	3.33	2.50	1.00
10	10.0	3.33	3.33	1.11
10	15.0	3.33	3.33	1.25
20	0.0	1.33	1.17	0.95
20	5.0	2.00	1.66	1.33
20	10.0	2.22	1.66	1.54
20	15.0	2.50	2.00	1.80
30	0.0	0.85	0.80	0.65
30	5.0	1.50	1.11	0.78
30	10.0	1.57	1.15	0.81
30	15.0	1.76	1.25	0.83

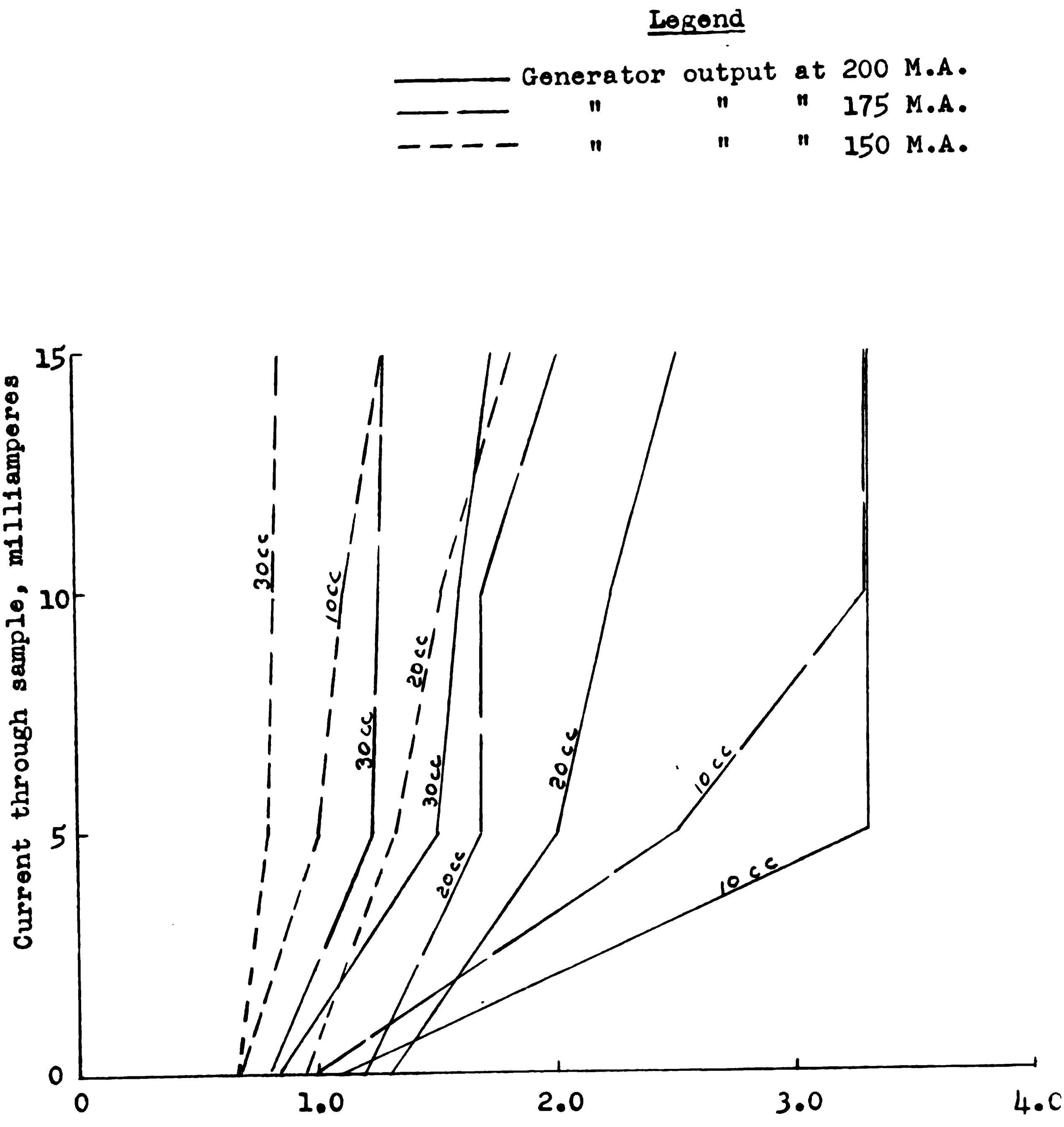

Fig. 7. Plot of data given in Table I.

The electrodes were platinum wires. The irradiation tubes were one-half inch internal diameter by six inches long, pyrex test tubes.

The results are given in Table I, and shown graphically in Fig. 7.

Procedure B

Milk was irradiated in an aluminum test tube both with and without the passage of an electric current through the sample. Whereas in the case of procedure A, two electrodes were required, in this case the tube itself served as one electrode, and a centrally situated platinum probe served as the other. As in procedure A, distilled water was used in the transducer as a transmission medium between the transducer element and the irradiation tube. The water temperature was controlled to 150° F. ± 5° by passing water through the cooling coils. The irradiation tube was positioned in the transducer so that its bottom was at the focal point of the ultrasonic beam.

Two variables, current through the sample, and polarity of tube and probe, were studied. The intensity of irradiation (output current of generator) and the sample size were held constant.

The results are given in Table II and shown graphically in Fig. 11.

Fig. 8. Apparatus used in procedure B.

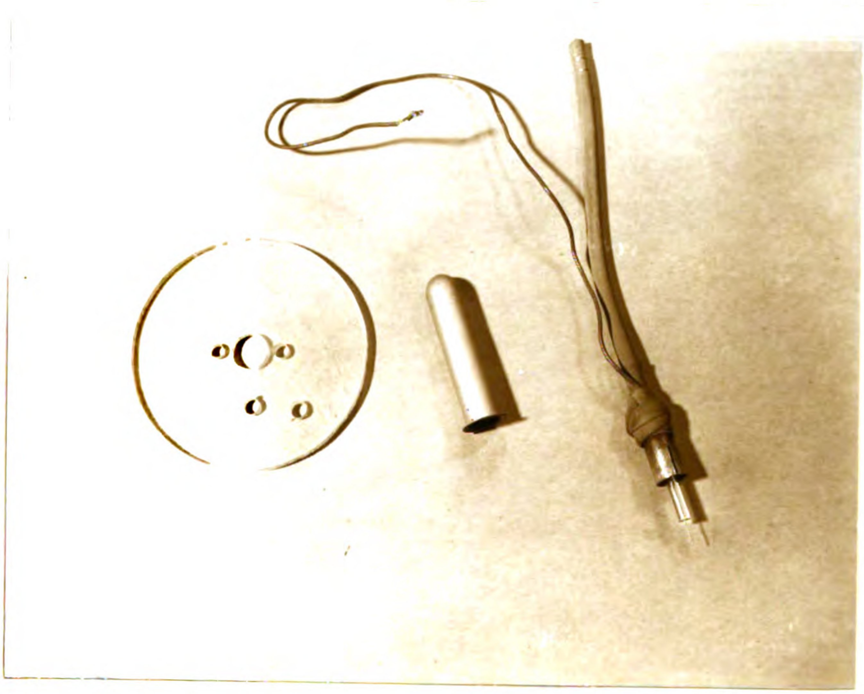

Fig. 9. Electrode, metal irradiation tube, and tube holder used in procedure B.

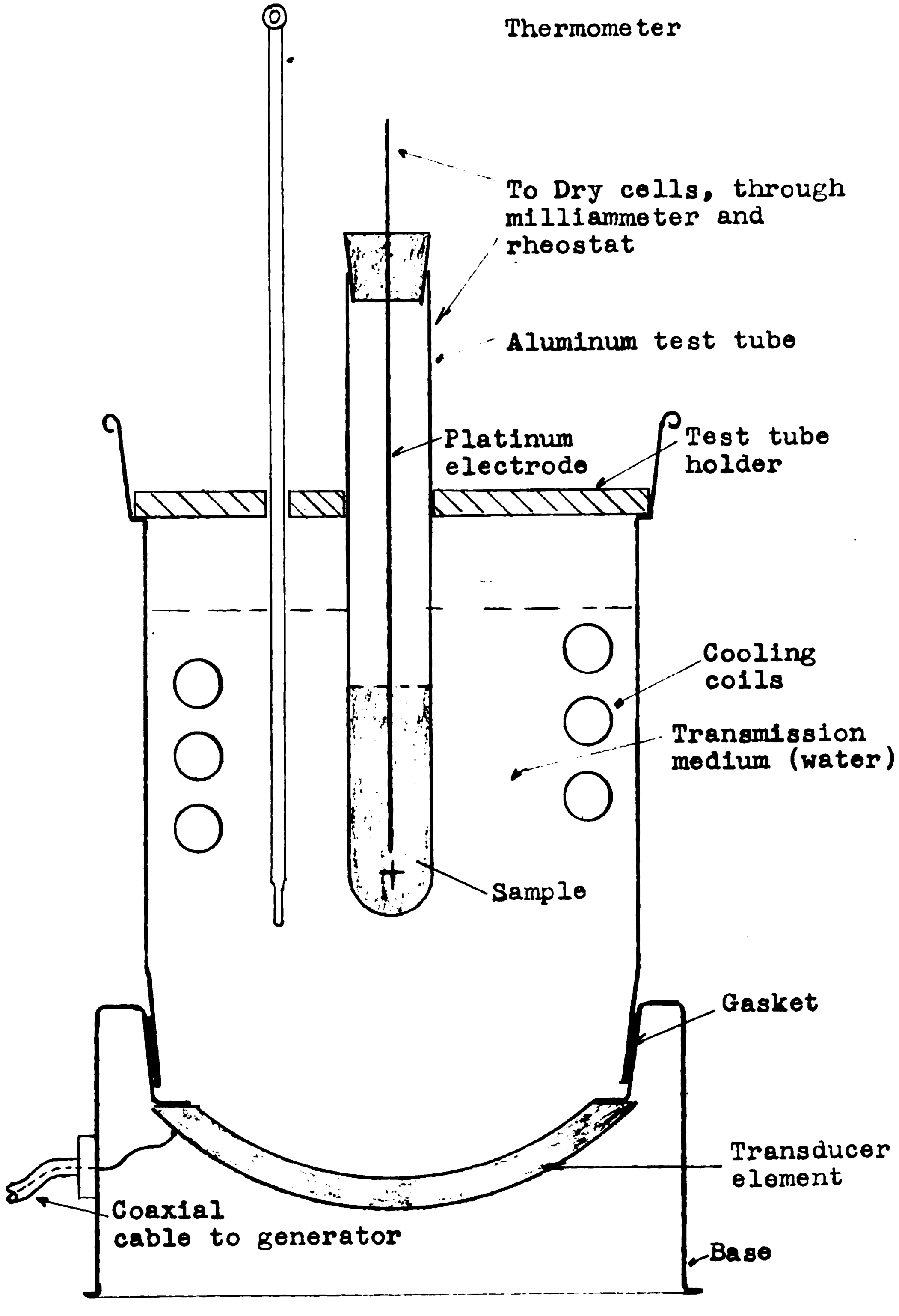

Fig. 10. Section through transducer unit showing irradiation arrangement for procedure B.

TABLE II

EFFICIENCY OF HOMOGENIZATION WHEN IRRADIATED IN A METAL TUBE

Sample Size	Current Through Sample	Efficiency Factor*	
		Tube +, Probe -	Tube -, Probe +
c.c.	milliamperes	c.c./min.	c.c./min.
8	0.00	1.60	2.00
8	5.00	4.00	4.00
8	10.00	3.20	4.00
8	15.00	4.00	4.00
8	20.00	2.70	2.70

*Generator output to transducer: 200 M.A.

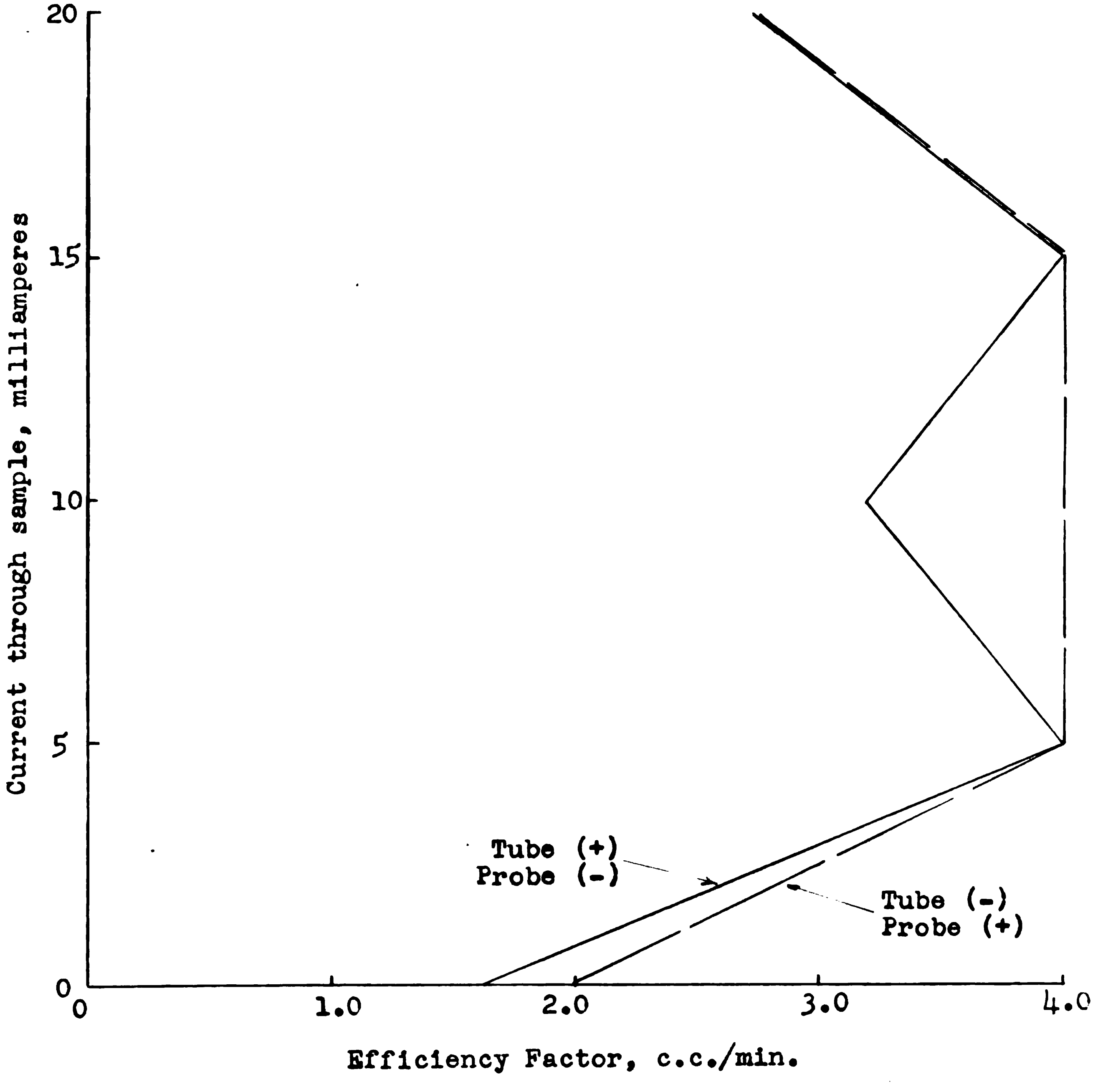

Fig. 11. Plot of data given in Table II.

Procedure C

Milk was irradiated directly in the transducer. The milk being in this case the transmission medium. Its temperature was controlled to 150° F. ± 5° by passing tap water through the cooling coils. The transducer element was one electrode and a centrally located platinum probe positioned at the focal point of the ultrasonic beam became the other electrode. Since it was necessary to maintain a minimum volume of approximately 350 c.c. in the transducer to obtain stable operation of the transducer, all irradiation was done with this fixed volume.

Samples were treated with the probe acting as the (-) electrode and the transducer element the (+) electrode at different current strengths. The above was repeated with the polarities reversed. The effect of output current of the generator was also studied.

The results are given in Table III and shown graphically in Fig. 15.

Procedure D

Milk was irradiated directly in the transducer with the milk being the transmission medium. The temperature was controlled to 150° F. ± 5° by passing tap water through the cooling coils. A sintered glass, gas diffusion tube was positioned centrally in the milk with the diffusion bulb at

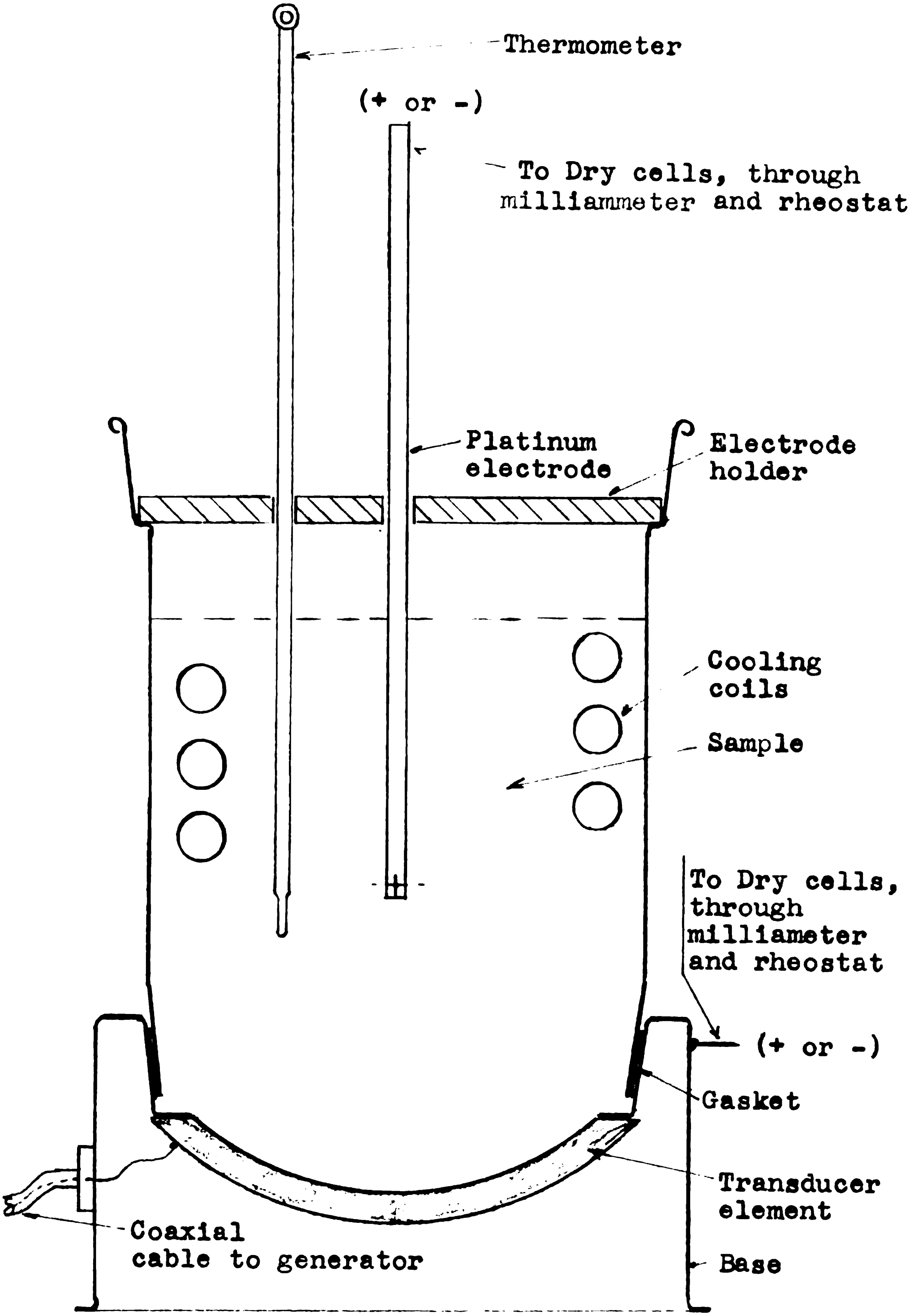

Fig. 12. Section through transducer unit showing irradiation arrangement for procedure C.

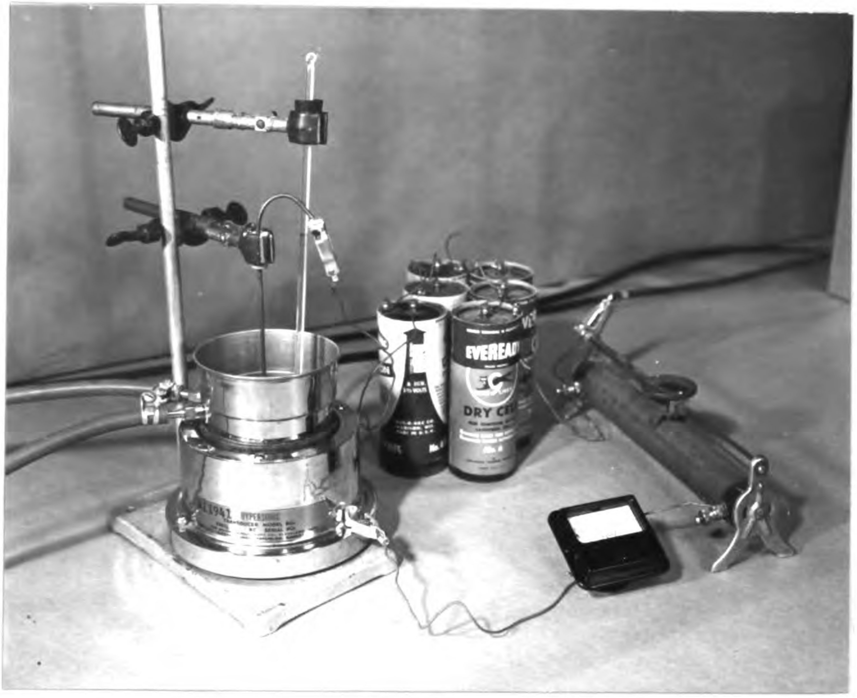

Fig. 13. Apparatus used for procedure C.

Fig. 14. Sample being irradiated directly in transducer.

TABLE III

EFFICIENCY OF HOMOGENIZATION WHEN THE MILK WAS IRRADIATED DIRECTLY IN THE TRANSDUCER BOWL: THE TRANSDUCER ELEMENT BEING THE (+) ELECTRODE AND THE PROBE BEING THE (-) ELECTRODE

Generator Output	Current Through Sample	Time to Effect Homogenization	Efficiency Factor
milliamperes	milliamperes	minutes	c.c./min.
150	0.0	no homo at 220	0.00
150	9.0	no homo at 220	0.00
150	18.0	no homo at 220	0.00
150	30.0	no homo at 240	0.00
175	0.0	180	1.95
175	9.0	120	2.91
175	18.0	110	3.18
175	30.0	105	3.33
200	0.0	150	2.33
200	9.0	65	5.38
200	18.0	60	5.83
200	30.0	60	5.83

Size of sample: 350 c.c.

TABLE IV

EFFICIENCY OF HOMOGENIZATION WHEN THE MILK WAS IRRADIATED DIRECTLY IN THE TRANSDUCER BOWL: THE TRANSDUCER ELEMENT BEING THE (-) ELECTRODE AND THE PROBE BEING THE (+) ELECTRODE

Generator Output	Current Through Sample	Time to Effect Homogenization	Efficiency Factor
milliamperes	milliamperes	minutes	c.c./min.
150	0.0	no homo at 240	0.00
150	10.0	no homo at 240	0.00
150	20.0	no homo at 240	0.00
150	30.0	no homo at 240	0.00
175	0.0	no homo at 240	0.00
175	5.0	no homo at 240	0.00
175	10.0	no homo at 240	0.00
175	15.0	240	1.45
200	0.0	240	1.45
200	5.0	225	1.55
200	10.0	225	1.55
200	15.0	230	1.52

Size of sample: 350 c.c.

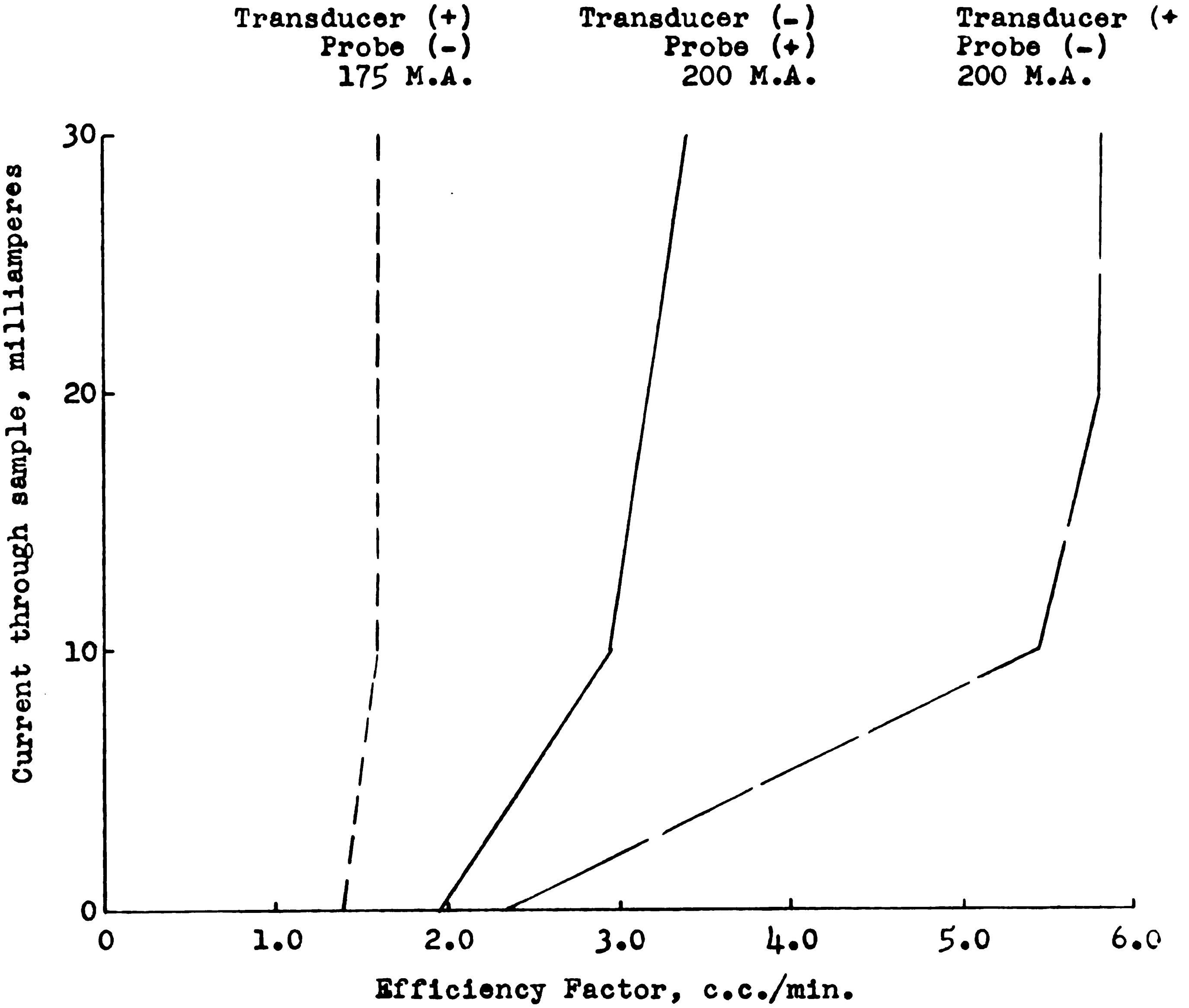

Fig. 15. Plot of Data given in Tables III and IV.

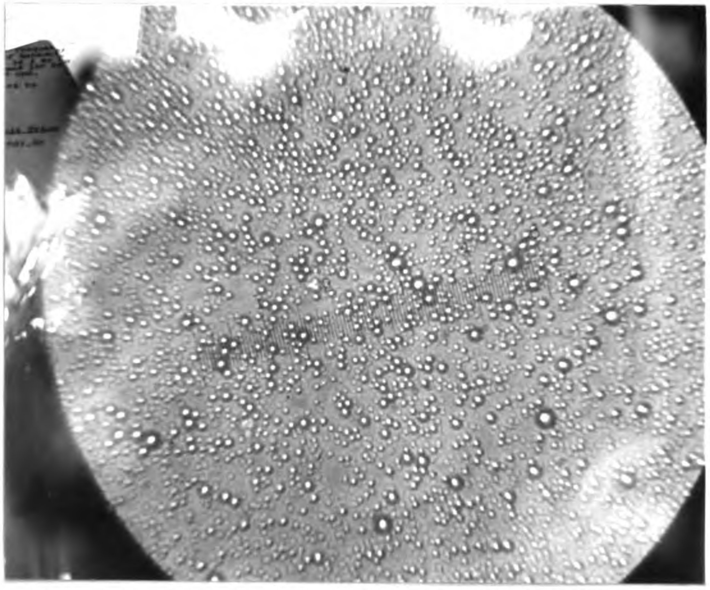

Fig. 16. Photomicrograph of untreated milk sample.

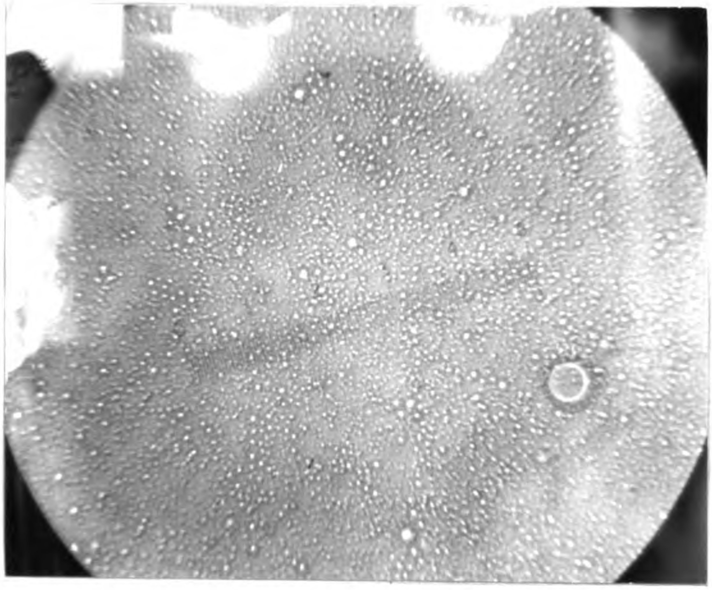

Fig. 17. Photomicrograph of milk treated with ultrasonics only.

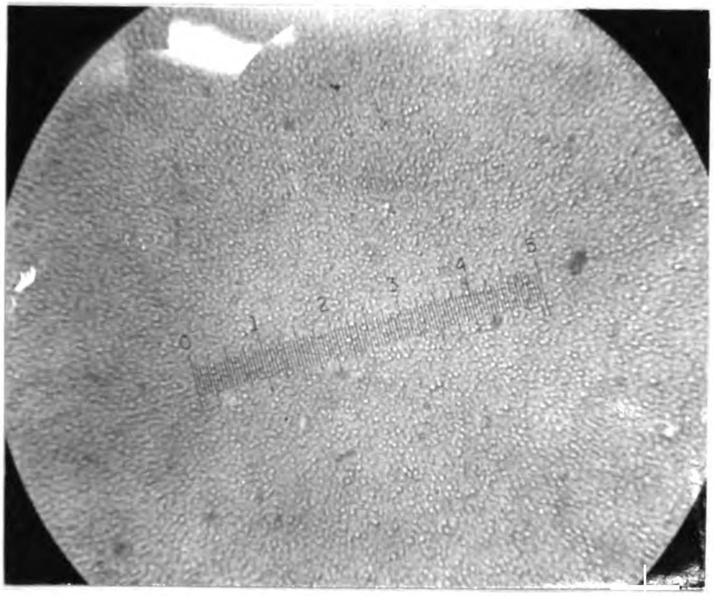

Fig. 18. Photomicrograph of milk treated with ultrasonics and an electric current.

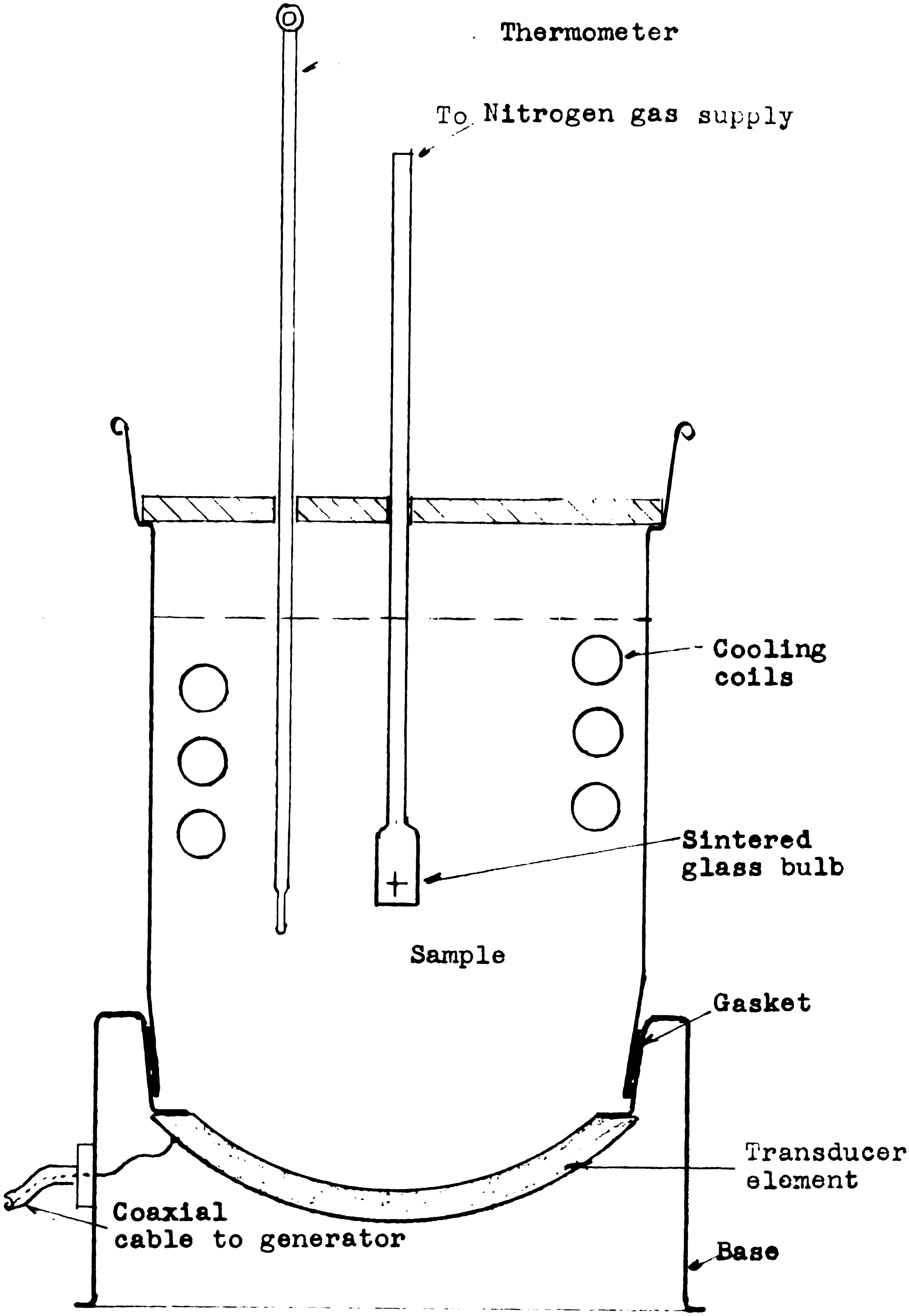

Fig. 19. Section through transducer unit showing irradiation arrangement for procedure D.

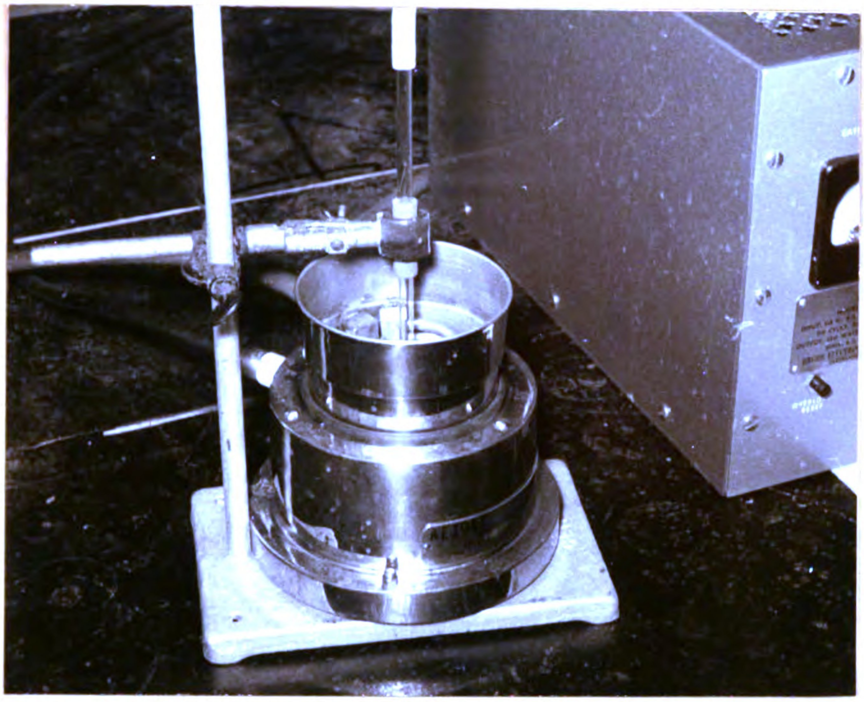

Fig. 20. Apparatus for procedure D.

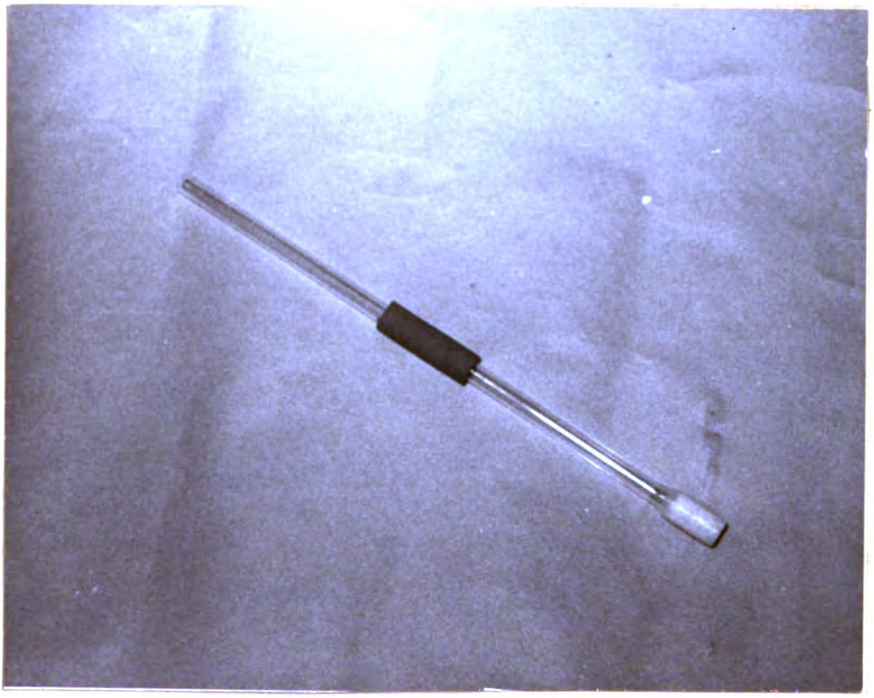

Fig. 21. Sintered glass, gas diffusion tube used in procedure D.

the focal point of the ultrasonic beam. Since it was necessary to maintain a minimum volume of approximately 350 c.c. in the transducer to obtain stable operation of the transducer, all irradiation was done at this fixed volume. Samples were irradiated both with and without percolating a gas through the diffusion tube. Nitrogen gas was used from a commercial gas cylinder. The volume of gas through the sample was regulated with the standard pressure-reducer-regulator normally used on commercial gas cylinders. The volume of gas was regulated to approximately the same quantity as evolved electrolytically in the previous procedures. All samples were irradiated at a generator output of 200 milliamperes.

Results of Procedure D

Generator output:	200 milliamperes
Sample volume:	350 c.c.

Irradiation without gas being percolated through sample:

Time to effect homogenization:	180 minutes
Efficiency factor:	1.95 c.c./min.

Irradiation with gas being percolated through sample:

Time to effect homogenization:	No homogenization after four hours of treatment.
Efficiency factor:	Undetermined.

Summary and Conclusions

1. Ultrasonic waves at a frequency of 430 kilocycles homogenize milk.

2. The efficiency of homogenization is evidently influenced by:

   a. Size of sample being treated.

   b. Intensity of ultrasonic waves.

   c. Whether sample is treated in a test tube or directly in the transducer.

   d. Presence of a dissolved gas phase within the milk.

   e. Physical dimensions of gas bubbles.

   f. The passage of an electric current through the milk while being treated.

This study was principally concerned with determining the influence of a dissolved gas phase and/or an electric current on the efficiency of homogenization. Although the results of each procedure varied considerably between procedures, there is evidence of a correlation between homogenization efficiency and current strength through the sample. When the gas phase was supplied through a sintered glass bulb, the efficiency was considerably reduced. In this case the gas bubbles were macroscopic in size.

From theoretical considerations, it was predicted that there should be an optimum electric current strength, i.e., the efficiency should be expected to increase with an increase in current strength, reach some maximum then decrease with further current increase. This was found to be the case. It was predicted that the efficiency would be increased if the irradiation vessel were made the positive electrode and the central probe made the negative one. Owing to extensive turbulence within the test tube no conclusions can be drawn. However, when the volume was considerably greater, i.e., when the milk was irradiated directly in the transducer bowl, there was strong evidence that only when the central electrode is negative was there any effect on the homogenization efficiency.

In conclusion it is believed that:

1. Homogenization by ultrasonic waves is influenced by the passage of an electric current through the milk during irradiation.
2. There is an optimum current strength for maximum efficiency.
3. The efficiency of homogenization is dependent upon the relative polarity of the irradiation vessel and the electrode of the focal point in irradiation zone.

PART II: ENERGY REQUIREMENTS FOR HOMOGENIZATION

Procedure

The generator was connected to the 115 volt, alternating current power supply through a watt-hour meter as shown in Fig. 1 and Fig. 3. The power input to the generator was determined at various output loads as indicated in milliamperes by meter (H) Fig. 1.

This data is shown graphically in Fig. 22.

Results

A review of the results for procedures A, B, C, and D in Part I, shows that the maximum efficiency of homogenization was attained in Procedure C (refer to Table II), wherein 350 c.c. of milk was irradiated directly in the transducer, at a generator output of 200 M.A., 18 m.a. of current through the sample, the transducer being the (+) electrode and the platinum electrode at the focus being the (-) electrode. Under these conditions the efficiency factor was 5.83 c.c./min.

From Fig. 22, the power input to the generator at an output of 200 M.A. is shown to be 420 watts. Thus the power requirements to the generator at this homogenization efficiency of 5.83 c.c./min. is 420 watts, which is equivalent to an homogenization of 1.82 lbs. per K.W.H.

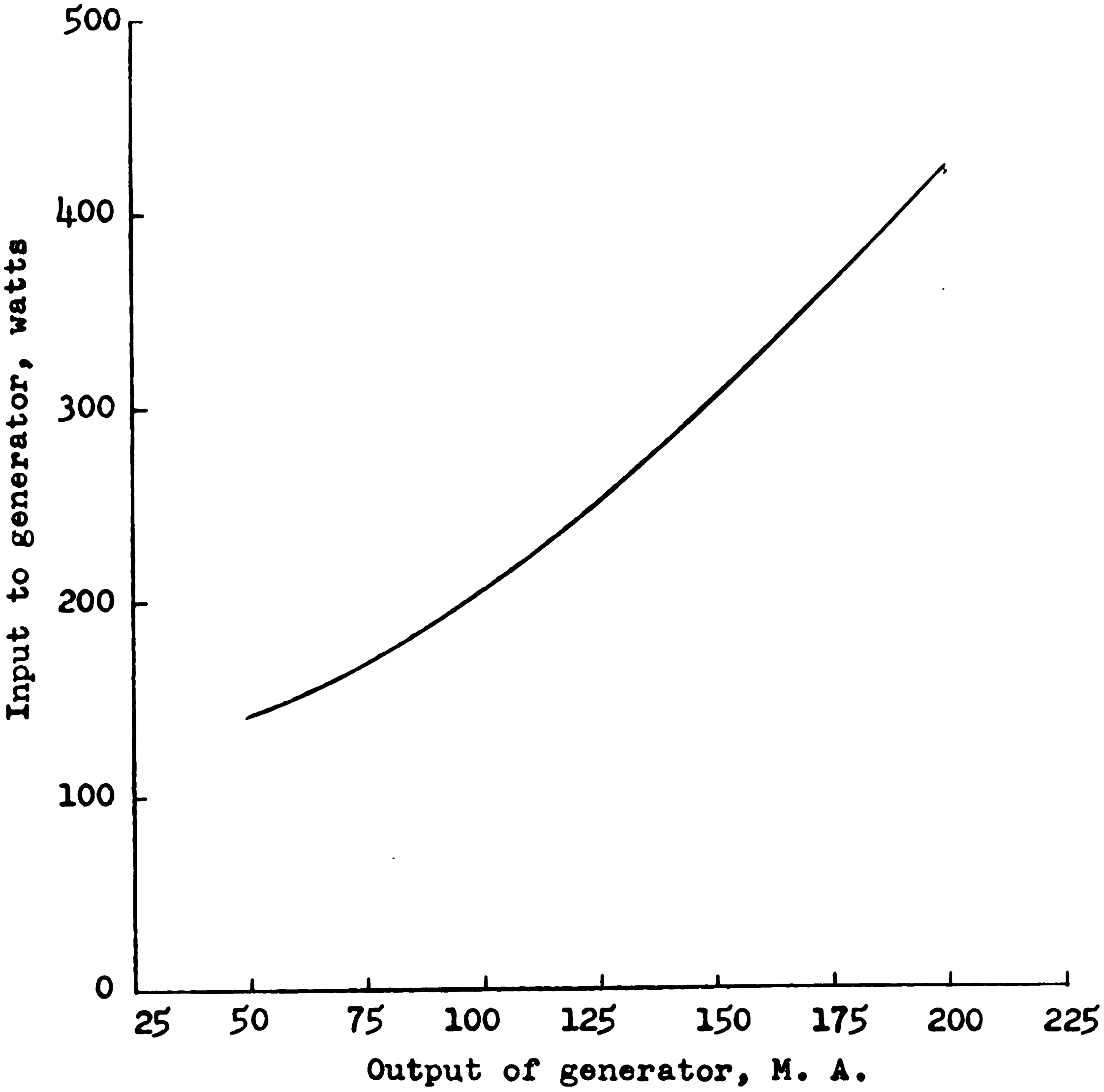

Fig. 22. Electric current output of generator versus power input.

A typical commercial, pressure type, milk homogenizer when processing at the rate of 500 gallons per hour under a pressure of 3000 psi. requires a 25 horsepower motor. This is equivalent to approximately 166.0 lbs. per K.W.H.

Summary and Conclusions

Under the conditions of this experiment, the electric power required to homogenize whole milk was found to be 1 K.W.H. per 1.82 lbs. of milk.

PART III: HEAT STABILITY

Procedure

Pasteurized milk having a 3.8 percent butterfat content was used for this work. Samples of 400 m.l. size were irradiated at an ultrasonic frequency of 430 kilocycles, and a power input of 200 M.A. directly in the transducer, both with and without an electric current being passed through the sample. The electric current strength used was 10 m.a. The milk was preheated to 135° F. ± 2° for 5 minutes prior to irradiation, and maintained at 135° F. ± 3° during irradiation. When being irradiated, simultaneously with the conduction of an electric current, only one condition of electrode polarity was used, i.e., when the transducer element was (+) and the centrally located platinum probe was (-). It was not considered necessary to treat with a reversed polarity since the results in Part I, Procedure C, indicated that the homogenization under such a condition would be very slight. A 5 m.l. specimen was extracted from the sample under treatment at 15 minute intervals and tested for heat stability. This was continued for 2 hours and 30 minutes. Samples were also taken at the end of one hour and at 15-minute intervals thereafter to check for degree of homogenization.

Criteria for Heat Stability

The alcohol test was used to determine heat stability (relative heat stability). The scoring of the samples was done according to the alcohol number (concentration) at which coagulation was just detectable.

The alcohol number solutions were prepared as follows:

Alcohol Number	ml. 95% ethyl alcohol	ml. Dst. H_2O
4	40	60
5	50	50
6	60	40
7	70	30
8	80	20
9	90	10
10	100	0

Testing Procedure

1. To 5 ml. of treated milk, in glass test tube, add 10 ml. of alcohol solution.
2. Mix gently and observe for coagulation.
3. Record the alcohol number of solution producing coagulation as the heat stability score.

Results

1. Untreated, preheated milk showed a heat stability of alcohol No. 9.
2. All specimens of the milk treated with ultrasonics alone showed a heat stability of alcohol No. 9.
3. All specimens of the milk treated simultaneously with ultrasonics and electric current (10 m.a.) showed a heat stability of alcohol No. 9.
4. None of the specimens of milk treated with ultrasonics alone was homogenized.
5. The milk treated with ultrasonics and the electric current was homogenized at one hour and 15 minutes. (Efficiency factor of 5.33 c.c./min.)

Summary and Conclusions

Under the conditions of this experiment there is no evidence of any alteration in the protein heat stability of milk when treated with ultrasonic energy. This is seemingly true even when the extent of the treatment was sufficient to cause homogenization.

PART IV: BACTERICIDAL PROPERTIES

Scope of Study

Other researchers have reported that ultrasonic waves of sufficient intensity have a lethal effect upon bacteria contained in milk. This investigator, through theoretical considerations, proposed that this effect would be increased if an electric current were passed through the milk simultaneously with irradiation. This phase of the work is limited to determining if such a correlation exists.

Apparatus

The principal items of apparatus were the same as those used in Parts I, II and III and are described elsewhere in this report. The irradiation test tubes (glass), tube holder and method for holding the platinum electrodes in place with the cotton plug are shown in Fig. 24. The entire assembly is shown in position in the transducer in Fig. 23. The source of direct current to the electrodes was six dry cell batteries. The amount of current was controlled by a rheostat in series with the batteries and the electrodes.

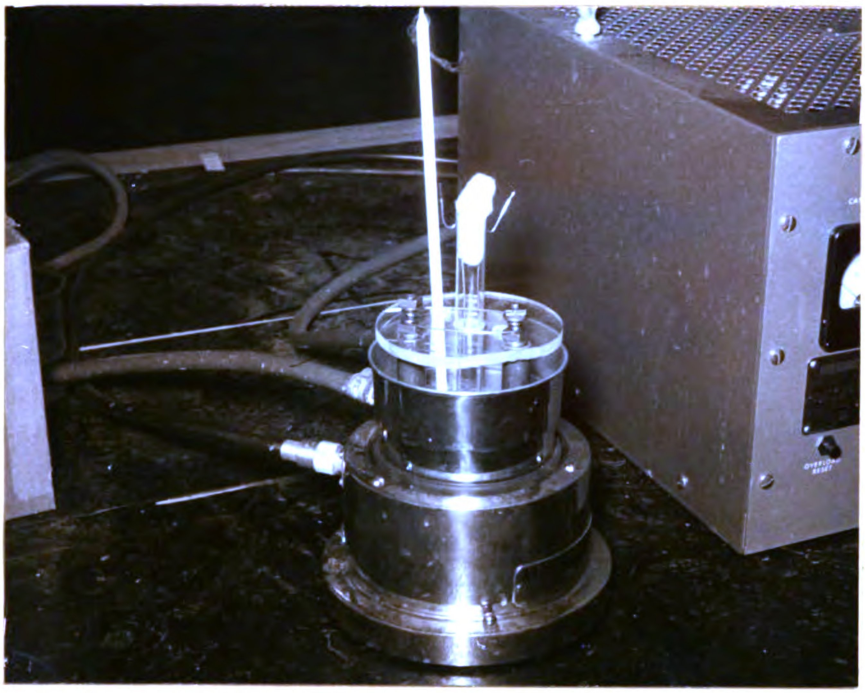

Fig. 23. Apparatus used for the bactericidal work.

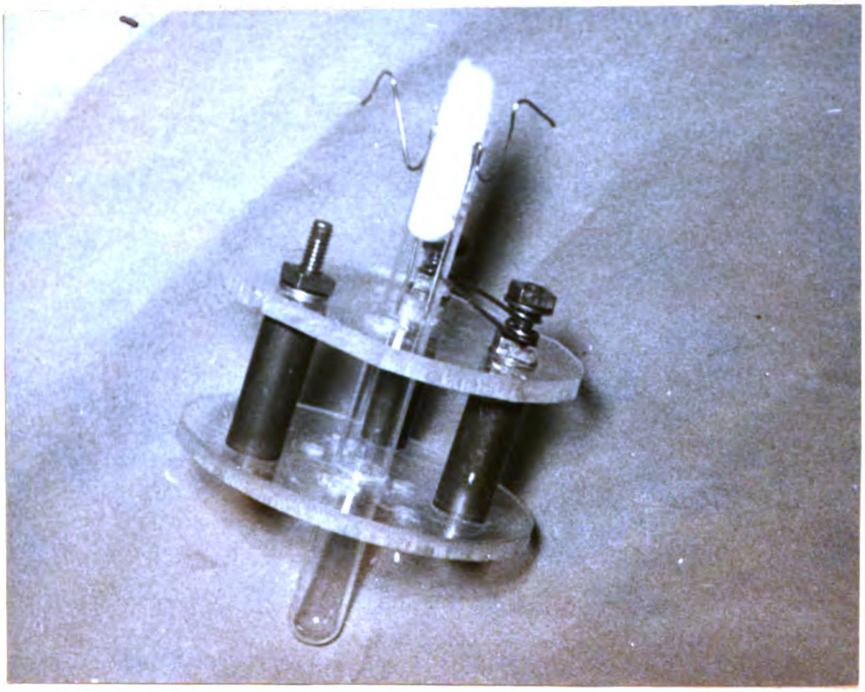

Fig. 24. Electrodes, glass tube, and tube holder used for the bactericidal work.

Procedure

Specimens of 4 m.l. were irradiated in glass test tubes for different lengths of time and at different current strengths through the milk. The test tubes were positioned in the transducer with their bottoms at the focal point of the ultrasonic beam in order that they receive the maximum possible irradiation intensity. The transmission medium was water, whose temperature was maintained as near 100° F. as possible by passing tap water through the cooling coils in the transducer assembly. It was necessary to adopt an indirect procedure to ascertain the actual temperature of the milk during irradiation. A mercury thermometer does not indicate a true temperature if its bulb is immersed directly in the focal point of an ultrasonic beam. A temperature determined in this manner will indicate several degrees higher than the true temperature. To determine the temperature of the milk being irradiated, a different 4 m.l. sample was treated under the same conditions and for the same length of time. The tube was then quickly removed from the transducer and a thermometer immediately plunged into the milk. To insure against a temperature drop due to the thermometer being below the milk temperature, the thermometer was preheated to near or somewhat above the milk temperature before being immersed. A true temperature within one or two degrees could be determined in this manner. It was found that the temperature of the milk rose to 10° F. above the transmission water within one minute and remained at that differential thereafter regardless of the time of treatment. All samples were irradiated at an ultrasonic frequency of 430 k.c. with a generator output to the transducer of 200 M.A.

The bacteria population for all specimens was determined by the standard plate count procedure. All specimens were tested for phosphatase reaction and coliform count. Three series of tests were made. The experimental procedure was the same for each except as follows: in series 1 and 2, reported in Tables V and VI, the milk specimens were irradiated in 1/4-inch inside diameter by 4 inches long, glass tubes, whereas, in series 3, reported in Table VII, the specimens were irradiated in 1/2-inch inside diameter by 6 inches long, glass test tubes.

Results

The tabular data reports the observed temperature of the transmission medium (water) in which the test tubes were immersed while being irradiated. The indirect method for determining the actual temperature of the milk indicated that the milk was 10° F. greater than the temperature of the water. Accordingly, the maximum temperature of the milk was 112° F., except for specimens number 2 and 3 in Table V. In these two cases the milk temperature reached 128° F. If

TABLE V

REDUCTION OF BACTERIA VERSUS CURRENT STRENGTH THROUGH MILK, AND LENGTH OF EXPOSURE, SERIES 1

Specimen	Exposure Time	Current Through Milk	Temp.(1)	Phosphatase Reaction	Standard Plate Count	Coliform
No.	min.	m.a.	°F.	+ or -	Bact./m.l.	Bact./m.l.
1	Control	0	---	+	29,000	1980(2)
2	3	0	118	+	3,700(2)	0
3	6	0	118	-	70	0
4	9	0	102	+	700	0
5	12	0	102	+	1,200	0
6	15	0	102	+	1,700	0
7	18	0	102	+	3,100	0
8	9	8	102	+	800	0
9	12	8	102	-	100	0
10	15	8	102	-	50	0
11	18	8	102	-	60	0
12	3	40	102	+	5,200	0
13	6	36	102	-	300	0
14	9	25	102		200	0

---

(1) Temperature refers to the temperature of the transmission medium in which the irradiation tubes were immersed during treatment.

(2) Log. average for a number of controls.

TABLE VI

REDUCTION OF BACTERIA VERSUS CURRENT STRENGTH THROUGH MILK, AND LENGTH OF EXPOSURE, SERIES 2

Specimen	Exposure Time	Current Through Milk	Temp.(1)	Phosphatase Reaction	Standard Plate Count	Coliform
No.	min.	m.a.	°F.	+ or -	Bact./m.l.	Bact./m.l.
1	Control	0	102	+	22,000(2)	200(2)
2	3	0	102	+	4,400	39
3	6	0	102	+	9,200	2
4	9	0	102	+	6,100	1
5	9	10	102	+	4,500	0
6	9	10	102	+	4,000	0
7	9	10	102	+	3,300	0
8	3	20	102	+	4,100	0
9	6	20	102	+	8,100	0
10	9	20	102	+	5,800	0

---

(1) Temperature refers to the temperature of the transmission medium in which the irradiation tubes were immersed during treatment.

(2) Log. average for a number of controls.

TABLE VII

REDUCTION OF BACTERIA VERSUS CURRENT STRENGTH THROUGH MILK, AND LENGTH OF EXPOSURE, SERIES 3

Specimen	Exposure Time	Current Through Milk	Temp.(1)	Phosphatase Reaction	Standard Plate Count	Coliform
No.	min.	m.a.	°F.	+ or -	Bact./m.l.	Bact./m.l.
1	Control	0	---	Control	70,200(2)	1,000(2)
2	3	0	102	+	204,000	230
3	6	0	102	+	126,000	90
4	9	0	102	+	100,000	140
5	12	0	102	+	80,000	20
6	15	0	102	+	158,000	13
7	3	5	102	+	120,000	1,560
8	6	5	102	+	172,000	590
9	9	5	102	+	136,000	170
10	3	10	102	+	120,000	1,600
11	6	10	102	+	84,000	120
12	9	10	102	+	122,000	140
13	12	10	102	+	99,000	1
14	15	10	102	+	70,000	3

---

(1) Temperature refers to the temperature of the transmission medium in which the irradiation tubes were immersed during treatment.

(2) Log. average for a number of controls.

these temperatures were faithful reflections of the true thermal conditions then the lethal effects reported can hardly be attributed to a time-temperature pasteurizing effect.

The results shown in Tables V and VI show a reduction in bacteria population both with and without the simultaneous passage of an electric current. The reduction was somewhat greater in the case where the current treatment was used, but perhaps not to a significant extent. In Table V, the coliform were reduced to a level below detection. In Table VI, the reduction in coliform is significantly related to time of treatment and to the passage of an electric current. In Table VI the phosphatase reaction was consistently (+) indicating that there were no thermal effects present. Whereas, in Table V, some of the specimens reacted negatively to the phosphatase test. This occurred even though the milk temperature apparently did not go beyond 112° F. (except specimen 2).

The results shown in Table VII were inconsistent with the results given in Tables V and VI so far as the general population (standard plate count) was concerned. In general, the plate count for the treated specimens were greater than for the controls. The procedure used in obtaining the data shown in Table VII differed from that used in obtaining the data shown in Tables V and VI in one respect; the test tubes were considerably larger in the case for Table VII, hence the specimens would have been exposed to a lesser ultrasonic energy level than for the specimens treated in the first two series. At a lesser intensity level, no lethal effect existed but possibly bacteria clumps were dispersed, which contributed to an increase in plate count. The coliform, however, were reduced both with and without the passage of an electric current. Their reduction showed a correlation both with time of treatment and with the increasing amount of electric current. In this third series too, the phosphatase reaction was (+) indicating that any lethal property was not due to a thermal effect but could be attributed to ultrasonic energy.

Summary and Conclusions

The bacteria population of raw milks was reduced by ultrasonic irradiation with and without the simultaneous passage of an electric current.

The coliform organisms present in the milk were reduced to a level below detection.

Under the conditions of this experiment the coliform reduction is related to the intensity of the simultaneous passage of an electric current.

There was no significant correlation between bacterial destruction and current intensity as judged by the effect on the total population.

REFERENCES CITED

1. Alexander, Jerome. Colloid Chemistry, Vol. 5. Reinhold Publishing Company, New York. (1944).

2. Anderson, E. O. Sonic vibration of ice cream mixes. Proc. 36th Ann. Conv. Assoc., Ice Cream Mfgrs. 2:126 (Cited in Journal Dairy Science. 1937. 20. p. 98 of Abstracts Entry 252).

3. Aston, C. Treating milk with sound waves. Chemistry Abstracts. 33:1832 (1939).

4. Beckwith, T. D., and C. E. Weaver. Sonic energy as a lethal agent for yeast and bacteria. Journal Bacteriology. 32:(4)361 (1936).

5. Bergmann, L. Ultrasonics and Their Scientific and Technical Applications. Translated by S. H. Hatfield. John Wiley and Sons, New York (1938).

6. Boyle, R. W. Ultrasonics. Science Progress. 23:75 (1928).

7. Boyle, R. W. Ultrasonic waves. Nature. 120:476 (1927).

8. Boyle, R. W., and J. F. Lehmann. Report on ultrasonics. Canada Research Council (1923).

9. Boyle, R. W., and J. F. Lehmann. The relation between the thickness of a partition in a medium and its reflection of sound waves by the ultrasonic method. Physics Review (II) 27:518 (1926).

10. Boyle, R. W., G. B. Taylor, and D. K. Froman. Cavitation in the track of an ultrasonic beam. Transactions Royal Society Canada (III) 23:187 (1929).

11. Blake, F. G. The onset of cavitation in liquids. I. Technical Memorandum No. 12. Acoustical Research Laboratory. Harvard University, Cambridge, Mass. (1949).

12. Brown, E. P. Homogenization of milk by sonic vibration. Milk Plant Monthly. 30:52 (1941).

13. Burger, Marie. Homogenization and deaeration of milk by ultrasonic sound waves. Unpublished Ph. D. thesis, University of Wisconsin. (1954).

14. Cady, Walter G. Piezo-electricity. McGraw-Hill Book Co., New York. (1946).

15. Campbell, L. E., and L. G. Schoenleber. Uses of ultrasonic energy in agriculture. Agricultural Engineering, 30:239 (May 1949).

16. Chambers, L. A. Sound Waves; a new tool for food manufacturers. Food Industry, 10: (March 1938).

17. Chambers, L. A., and N. J. Gaines. Some effects of intense audible sound on living organisms and cells. Journal Cellular and Comparative Physiology, 1:451 (1932).

18. Carlin, B. Ultrasonics. McGraw-Hill Book Company, New York. (1949).

19. Dognon, A., E. Biancani, and H. Biancani. Ultra-Sons et Biologie, Gauthier-Villars, Paris. (1937).

20. Fox, F. E., and V. Griffing. Experimental investigation of ultrasonic intensity gain in water due to concave reflectors. Journal Acoustical Society of America, 21:352 (July 1949).

21. Freundlich, H. Industrial applications of supersonic vibrations. Industrial Chemistry, 13:488 (1937).

22. Freundlich, H., and K. Sollner. The influence of ultrasonic waves on gels. Transactions Faraday Society, 32: 966 (1936).

23. Harvey, E. N. Biological aspects of ultrasonic waves. Biological Bulletin 59:306 (1930).

24. Harvey, E. N. Effect of high frequency sound on heart muscle and other irritable tissues. American Journal Physiology, 91:284 (1929).

25. Harvey, E. N., and A. L. Loomis. ✓ The destruction of luminous bacteria by high-frequency sound waves. Journal Bacteriology, 17:373 (1929).

26. Harvey, E. N., and A. L. Loomis. High speed photomicrography of living cells subjected to supersonic vibrations. Journal General Physiology, 15:(2)147 (1931).

27. Harvey, E. N., and A. L. Loomis. Further observations on the effects of sound waves on living matter. Bulletin, Marine Biological Laboratory, 55:(6)459-69 (1928).

28. Harvey, E. N., and A. L. Loomis. High frequency sound waves of small intensity and their biological effects. Nature, 121:622 (1928).

29. Hopwood, F. L. Experiments with high-frequency sound waves. Journal Scientific Instruments, 6:34 (1929).

30. Johnson, C. H. The lethal effects of ultrasonic radiation. Journal Physiology, 67:356 (1929).

31. LeGally, D. P., and G. W. Patterson. The action of high frequency sound waves on bacteria. American Journal Pharmacy, 112:(9)373 (1940).

32. Liu, S.C. and A.C.N. Yen. Further studies on the effect of supersonic waves on bacteria. Proceedings Society Experimental Biology and Medicine, 32:(3)485 (1934).

33. Loo, C. C., and W. M. Carleton. Further studies of cavitation in the homogenization of milk products. Journal Dairy Science, 36:64 (Jan. 1953).

34. Noltingk, B. E., and E. A. Neppiras. Cavitation produced by ultrasonics. Proc. Phys. Soc. London. 63B 674 (1950).

35. Noltingk, B. E., and E. A. Neppiras. Cavitation produced by ultrasonics: Theoretical conditions for the onset of cavitation. Proc. Phys. Soc. London. 64B 1032 (1951).

36. Rayleigh, Lord. Theory of Sound. Macmillan and Co., Ltd., London. (1929).

37. Richards, W. T. Chemical effects of high frequency sound waves. Journal American Chemical Society, 51: 1724 (1929).

38. Richards, W. T. The heating of liquids by the absorption of sound, and its relation to the energy of intense high frequency sound waves. Proceedings National Academy Science, 17:611 (1931).

39. Richardson, E. G. Ultrasonic Physics. Elsevier Publishing Co., New York. (1952).

40. Schmitt, F. O., C. H. Johnson, and R. A. Olson. Oxidations promoted by ultrasonic irradiation. Journal American Chemical Society, 51:370 (1929).

41. Schmitt, F. O., and B. Uhlemeyer. The mechanism of the lethal effects of ultrasonic radiation. Proceedings Society Experimental Biology and Medicine, 27:626 (1930).

42. Sollner, K. Applications of sonic and ultrasonic waves in colloidal chemistry. Chemical Reviews, 34:371 (1944).

43. Sollner, K. Experiments to demonstrate cavitation caused by ultrasonics. Transactions Faraday Society, 32:1537 (1936).

44. Sollner, K., and C. Bondy. Mechanism of emulsification by ultrasonic waves. Transactions Faraday Society, 31: 835 (1935).

45. Sommer, H. H. Market Milk and Related Products. 2nd ed. Olsen Publishing Co., Milwaukee, Wisconsin. (1945).

46. Vigoreux, P. Ultrasonics. John Wiley, New York. (1951).

47. Williams, C. B., and Newton Gaines. The bactericidal effects of high frequency sound waves. Journal Infectious Disease, 47:(6)485 (1930).

48. Wood, Alexander. Acoustics. Interscience Publishers, Inc., New York. (1941).

49. Wood, R. W., and A. L. Loomis. The physical and biological effects of high-frequency sound waves of high intensity. Philosophical Magazine, 4:7 (1927).

50. Yen, A. C. N., and S. C. Liu. Effect of supersonic waves on bacteria. Proceedings Society Experimental Biology and Medicine, 31:(9)1250-2 (1934).