A PROPOSED RETAINING WALL TO PROVIDE STORAGE FOR FIVE THOUSAND TONS OF COAL

Thesis for the Degree of B. S.

MICHIGAN STATE COLLEGE

W. D. Strait H. H. Post

1948

A Proposed Retaining Wall
To Provide Storage
For Five Thousand Tons of Coal

A Thesis Submitted to

The Faculty of

MICHIGAN STATE COLLEGE

of

AGRICULTURE AND APPLIED SCIENCE

by

W. D. Strait H. H. Post

Candidates for the Degree of

Bachelor of Science

June 1948

6/11/48

We wish to express our gratitude to
W. A. Bradley for his cooperation and guidance.

H. H. Post
W. D. Strait

TABLE OF CONTENTS

INTRODUCTION

Mr. Kinney of the Building and Grounds Department expressed a desire for a storage bin for a reserve stock of coal. A reserve stock is now in existence between the Forge Building and the Red Cedar River. This stock pile is unsatisfactory because it is unsightly, the quantity of coal cannot be estimated accurately, and removal of coal by clamshell is difficult.

Five thousand tons of coal is the quantity desired in the proposed storage bin. A bin incorporating the design of retaining walls would alleviate the present difficulties.

The height of wall required for such a bin is about twenty feet. This height brings up the question of whether a cantilever or counterfort wall should be used. Designs are shown for both cases with cost estimates included.

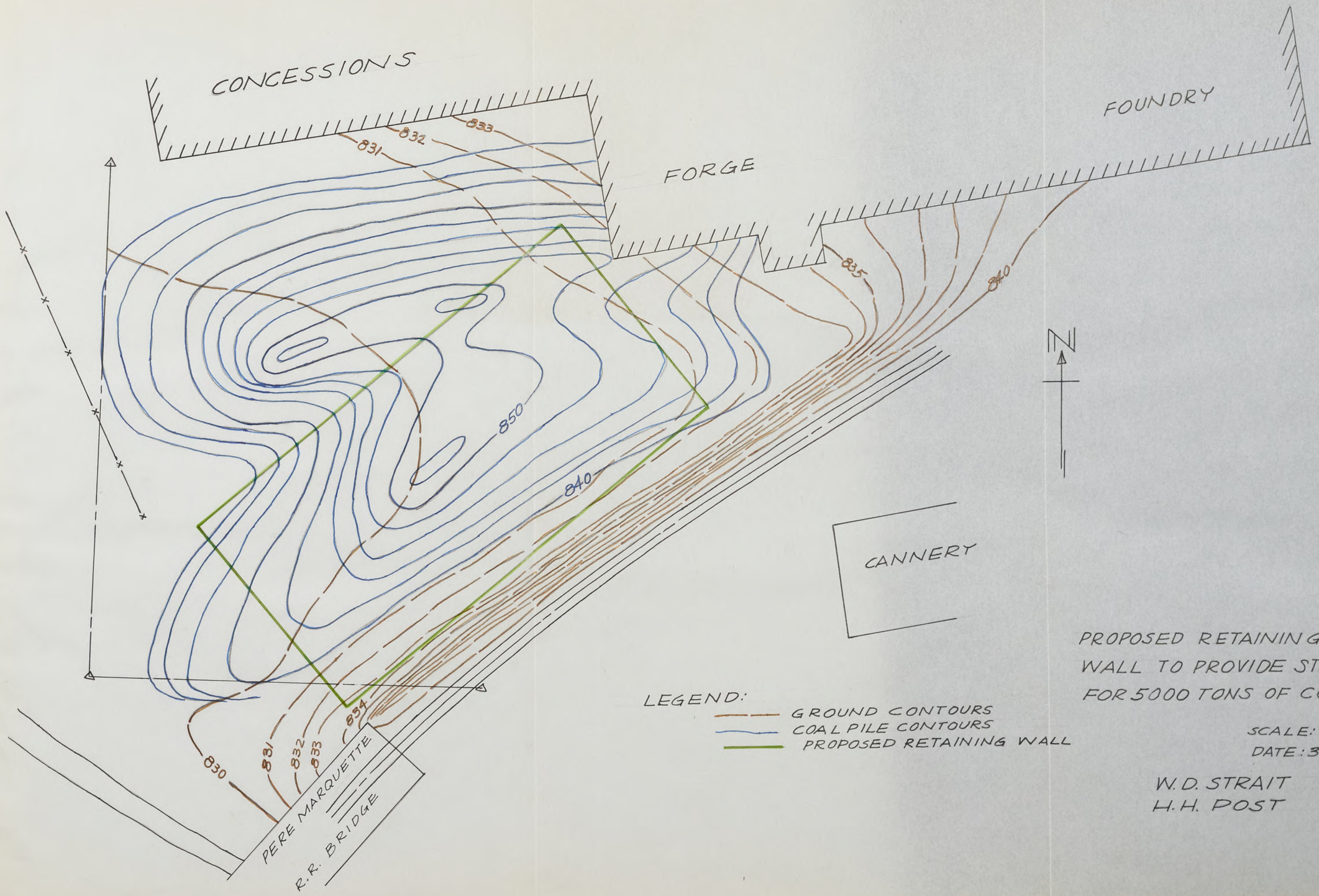

PROPOSED RETAINING WALL TO PROVIDE STORAGE FOR 5000 TONS OF COAL.

SCALE: 1"=20'
DATE: 3-29-48

W.D. STRAIT
H.H. POST

COMPUTATIONS FOR SIZE OF BIN

Amount of coal to be stored = 5000 Tons.

$5000^T \times 2000\ lb/T = 10{,}000{,}000$ lb. of coal

Coal weighs 70 lb./ft³

Cu. ft. req'd = $\frac{10{,}000{,}000}{70} = 143{,}000\ ft^3$

Size of bin = 55' × 110' = 6550 ft²

Average height of bin = $\frac{143{,}000}{6550} = 22'$ (if piled flat)

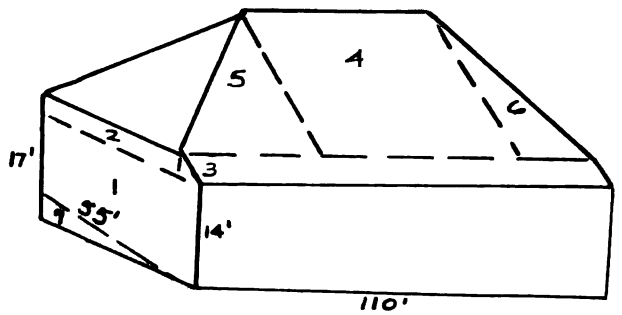

Volumes:

① Bottom $14 \times 55 \times 110 = 91{,}600\ ft^3$

② $2 \times 53 \times 110 = 11{,}600\ ft^3$

③ $2 \times 110 = 220\ ft^3$

④ $53 \times 57 \times 13.25 = 40{,}000\ ft^3$

⑤+⑥ $53^2 \times \frac{26.5}{3} = 23{,}800\ ft^3$

⑦ $\frac{1}{2} \times 55 \times 110 = 3{,}030\ ft^3$

$167{,}250 + 3000 = 170{,}250$

$\frac{170{,}250}{2000} \times 70 = \underline{5960}$ Tons

$\frac{170{,}250}{2000} \times 60 = \underline{5110}$ Tons

$\frac{170{,}250}{2000} \times 50 = \underline{4260}$ Tons

Allowing for variation in wt. of coal from 70 lb/ft³ to 50 lb/ft³

This bin seems to be of adequate size

COMPUTATIONS FOR SIZE OF BIN

Amount of coal to be stored = 5000 Tons.

$5000^T \times 2000\ lb/T = 10{,}000{,}000\ lb.$ of coal

Coal weighs 70 lb/ft³

Cu. ft. req'd = $\frac{10{,}000{,}000}{70} = 143{,}000\ ft^3$

Size of bin = 55' × 110' = 6250 ft²

Average height of bin = $\frac{143{,}000}{6250} = 22'$ (if piled flat)

Volumes:

① Bottom 14 × 55 × 110 = 91,600 ft³

② 2 × 53 × 110 = 11,600 ft³

③ 2 × 110 = 220 ft³

④ 53 × 57 × 13.25 = 40,000 ft³

⑤+⑥ $53^2 \times \frac{26.5}{3}$ = 23,800 ft³

⑦ ½ × 55 × 110 = 3,030 ft³

167,250 + 3000 = 170,250

$\frac{170{,}250}{2000} \times 70 = 5950$ Tons

$\frac{170{,}250}{2000} \times 60 = 5110$ Tons

$\frac{170{,}250}{2000} \times 50 = 4260$ Tons

Allowing for variation in wt. of coal
from 70 lb/ft³ to 50 lb/ft³
This bin seems to be of adequate size

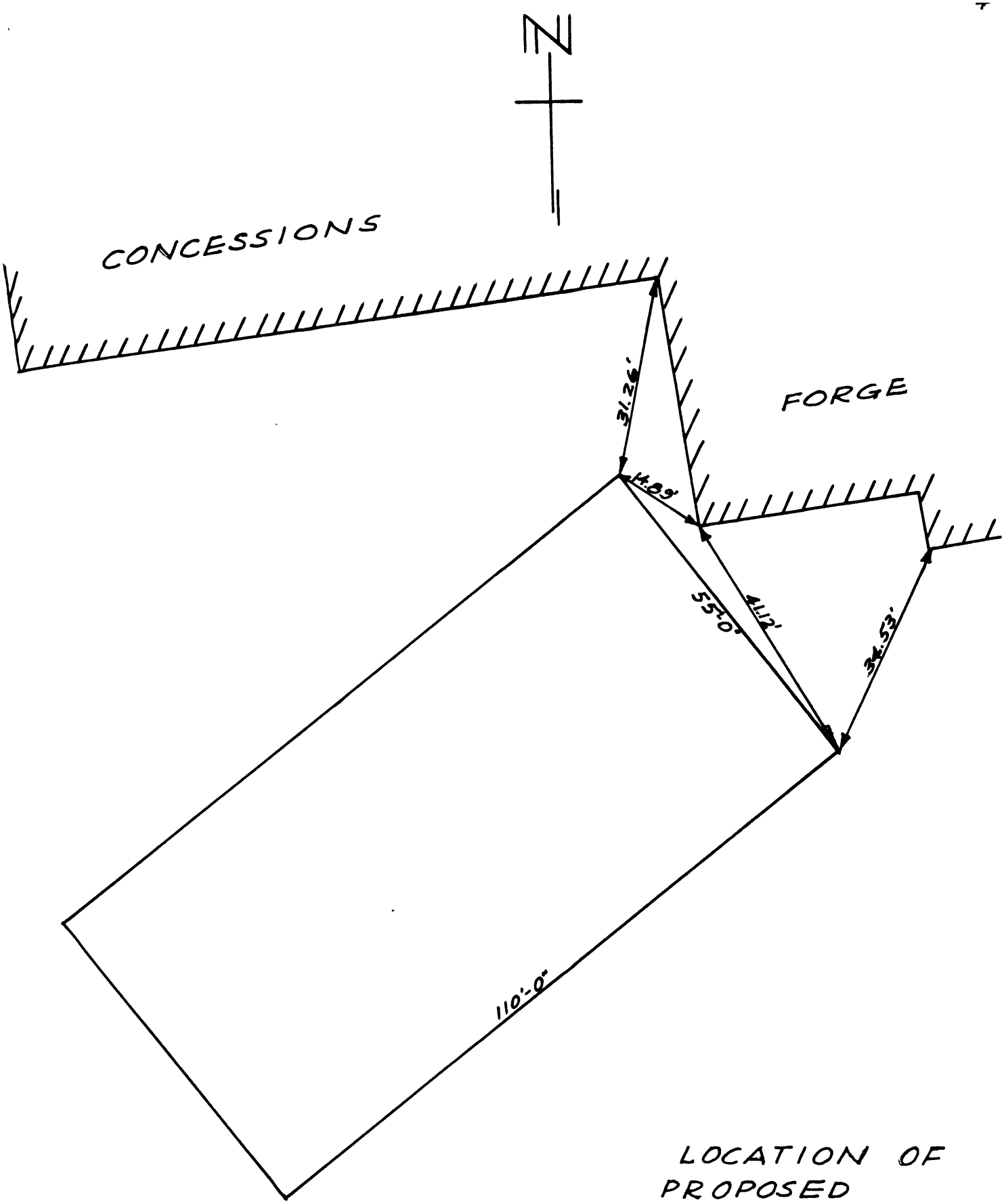

LOCATION OF
PROPOSED
RETAINING WALL

SCALE: 1" = 20'
DATE: 4-7-48
W.D. STRAIT
H. H. POST

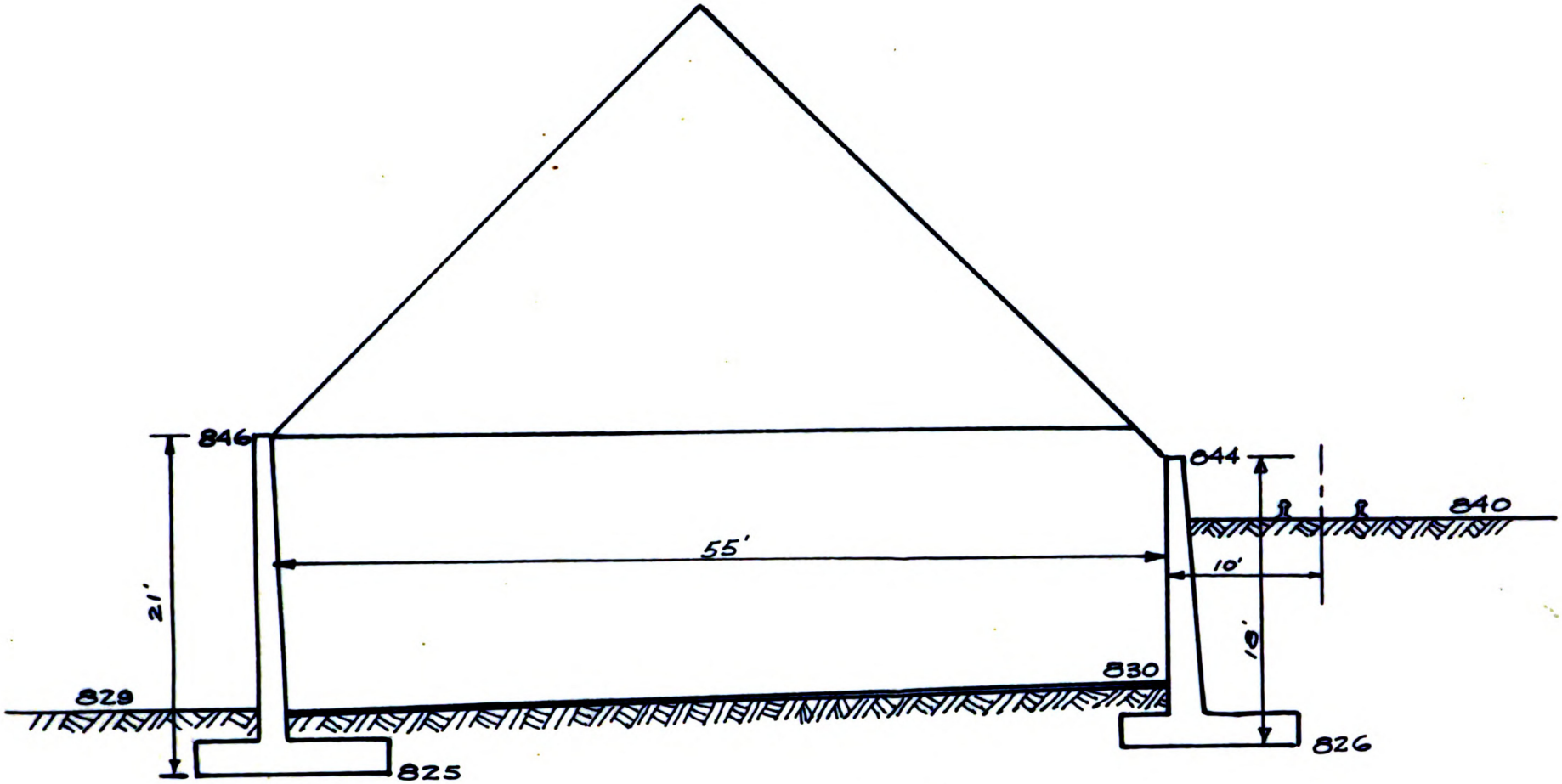

Cross Section Looking North
Scale: 1" = 10'

Cross Section Looking North

Scale: 1" = 10'

ASSUMPTIONS

Angle of Repose for coal = 45° *
Angle of Friction, coal on concrete = 30° *
Wt of coal for design purposes = 70 lb/ft³
Wt of earth fill = 100 lb/ft³
Angle of repose, earth, $\phi = 34°$
Angle of friction, earth on concrete = $\delta = 25°$
Concrete weighs 150 lb/ft³
28 day strength of concrete = 2000 psi = f'_c
Design strength of concrete = 800 psi = f_c
Concrete Shear = v_c = 40 psi (60 psi with Special Anchorage)
Concrete Bond = u = 100 psi
Steel Strength = f_s = 18,000 psi
Modular Ratio $\frac{E_s}{E_c} = n = 15$
$R = 140 = \frac{M}{bd^2}$
Steel ratio $p = .009$
Design constants: $j = 7/8$
$k = 3/8$

* Taken from "Walls, Bins, and Grain Elevators" by Milo S. Ketchum.

ASSUMPTIONS

Angle of Repose for coal = 45° *

Angle of Friction, coal on concrete = 30° *

Wt of coal for design purposes = 70 lb/ft³

Wt of earth fill = 100 lb/ft³

Angle of repose, earth, $\phi = 34°$

Angle of friction, earth on concrete = $\delta = 25°$

Concrete weighs 150 lb/ft³

28 day strength of concrete = 2000 psi = f'_c

Design strength of concrete = 800 psi = f_c

Concrete Shear = v_c = 40 psi (60 psi with Special Anchorage)

Concrete Bond = u = 100 psi

Steel Strength = f_s = 18,000 psi

Modular Ratio $\frac{E_s}{E_c} = n = 15$

$R = 140 = \frac{M}{bd^2}$

Steel ratio $p = .009$

Design constants: $j = 7/8$

$k = 3/8$

* Taken from "Walls, Bins, and Grain Elevators" by Milo S. Ketchum.

CASE I : Level Surcharge, Inert Prism, Omit Back Wall Friction.

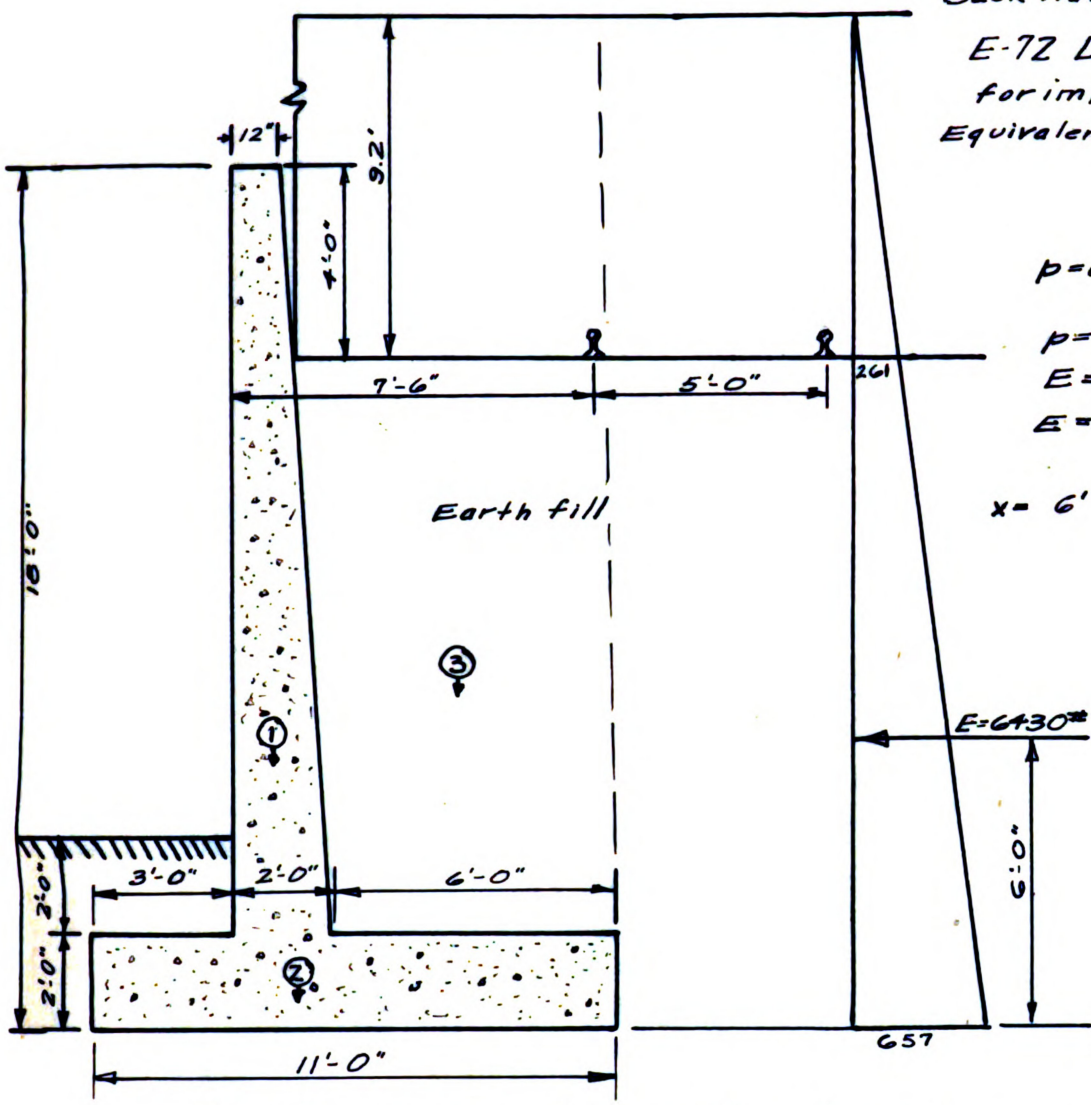

E-72 Loading, allow 15% for impact.

Equivalent Surcharge = $\frac{72,000}{5 \times 18} \times 1.15$

$= 920$ psf or 9.2'

$p = wh\left(\frac{1-\sin\phi}{1+\sin\phi}\right)$

$p = 28.3h$

$E = \frac{657+261}{2} \times 14$

$E = 6430^{\#}$

$x = 6'$

Base Pressures: Moments about Toe

		ARM		Mom
W_1 =	3300 lbs.	5.5'	=	18,200 lb. ft.
W_2 =	3600	3.75'	=	13,500
W_3 =	13900	8.0'	=	111,200
	20,800		M_R =	142,900

$6430 \times 6 = M_o = 38,580$

20,800 \ 104,320

5.02' from toe

$e = 5.5 - 5.02$

$e = .48'$

Toe & Heel Pressures:

$p = \frac{20,800}{11}\left(1 \pm \frac{6 \times .48}{11}\right)$

$p = 1890 \pm 495$

$p_t = 2385$ psf

$p_h = 1395$ psf

Overturning:

$\frac{M_R}{M_o} = \frac{142,900}{38,580} = 3.7$

Sliding:

$\frac{20,800 \times .466}{6430} = 1.51$

Must Anchor

CASE I:

Level Surcharge, Inert Prism, Omit Back Wall Friction.

E-72 Loading, allow 15% for impact:

Equivalent Surcharge = $\frac{72{,}000}{5\times18}\times1.15$

= 920 psf or 9.2'

$p = wh\left(\frac{1-\sin\phi}{1+\sin\phi}\right)$

$p = 28.3h$

$E = \frac{627+261}{2}\times14$

$E = 6430\#$

$x = 6'$

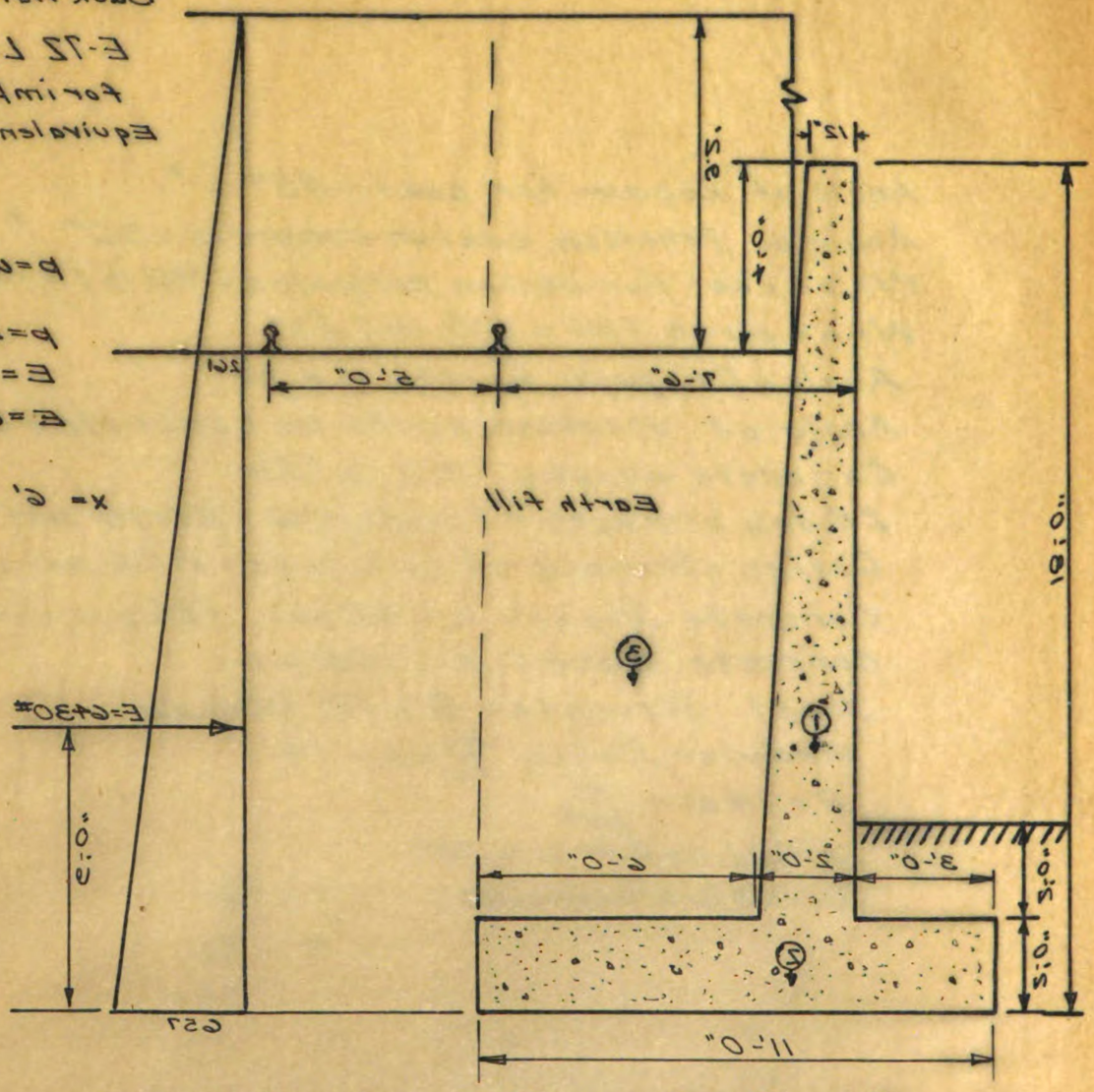

Base Pressures: Moments about Toe

W_1 =	3300 lbs	5.5'	=	18,200 lb ft
W_2 =	3600	3.75'	=	13,500
W_3 =	13900	8.0'	=	111,200
	20,800			M_R = 142,900

$6430\times6 = M_o = 38{,}580$

20,800 / 104,320

5.02' from toe

e = 5.5 - 5.02

e = .48'

Toe & Heel Pressures:

$p = \frac{20{,}800}{11}\left(1 \pm \frac{6\times.48}{11}\right)$

$p = 1890 \pm 435$

$p_t = 2385$ psf

$p_h = 1335$ psf

Overturning:

$\frac{M_R}{M_o} = \frac{142{,}900}{38{,}580} = 3.7$

Sliding:

$\frac{20{,}800\times.466}{6430} = 1.51$

Must Anchor

Railroad Cantilever Wall

CASE II : Level Surcharge - Inert Wedge - Full Back Wall Friction

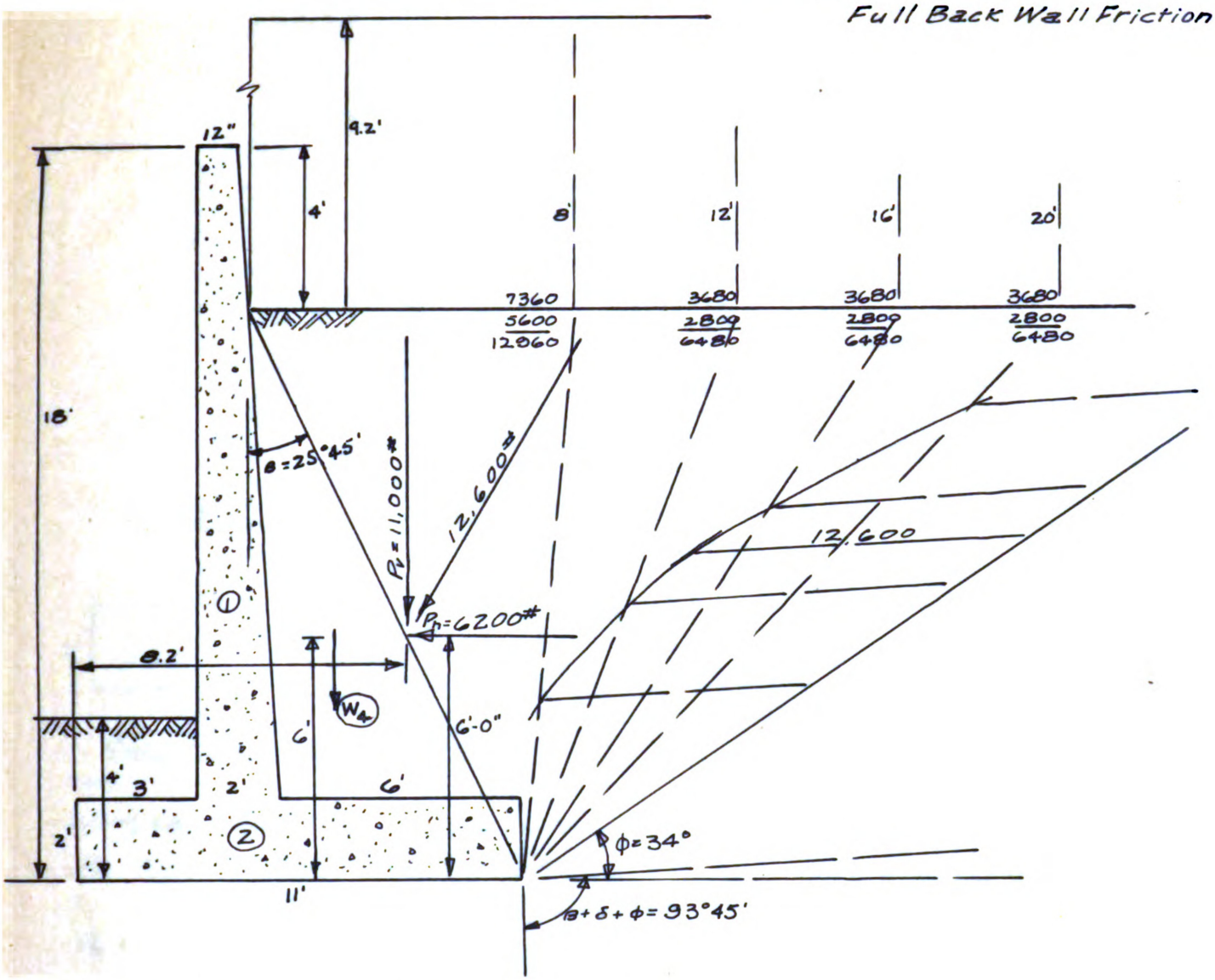

Base Pressures: Moments about Toe

	W	arm	Mom.
$W_1 + W_2 =$	6900 lb		31,700 lb.ft.
$W_4 = 5.15 \times \frac{12}{2} \times 100$	3090	× 6.45	19,900
$P_v =$	11,000	× 8.2	90,200
	21,090		M_R = 141,800 lb.ft.
$P_h =$	6200	× 6.0 = M_o =	37,200
		21,090	104,600
			5.0' from toe
			e = 5.5 - 5.0
			e = 0.5'

Toe & Heel Pressures:

$$p = \frac{21,090}{11}\left(1 \pm \frac{6 \times 0.5}{11}\right)$$

$$p = 1900(1 \pm .272)$$

$$p_t = 2420 \text{ psf}$$

$$p_h = 1380 \text{ psf}$$

Sliding: $\frac{21,090 \times .466}{6,200} = 1.59$ Must Anchor

Overturn: $\frac{M_R}{M_o} = \frac{141,800}{37,200} = 3.71$

CASE II:

Level Surcharge - Inert Wedge -

Full Back Wall Friction

Base Pressures: Moments about Toe

$W_1 + W_2 =$	6900 lb			31,700 lb.ft
$W_4 = 5.15 \times \frac{1}{2} \times 100$	3090	×	6.45	19,900
$P_v =$	11,000	×	8.2	90,200
	21,090			
$P_h =$	6200	×	6.0 = M_o =	37,200
				21,090 | 104,600
				M_R = 141,800 lb.ft.

Toe & Heel Pressures:

$P = \frac{21,090}{11}\left(1 \pm \frac{6 \times 0.5}{11}\right)$

$P = 1900\,(1 \pm .272)$

$P_t = 2420$ psf

$P_h = 1380$ psf

Overturn:

$\frac{M_R}{M_o} = \frac{141,800}{37,200} = 3.71$

Sliding:

$\frac{21,090 \times .466}{6,200} = 1.59$ Must Anchor

$e = \frac{0.5}{}'$

$e = 5.5 - 5.0$

5.0' from toe

Railroad Cantilever Wall

CASE III : Wheel Concentrations - Inert Wedge - Full Friction

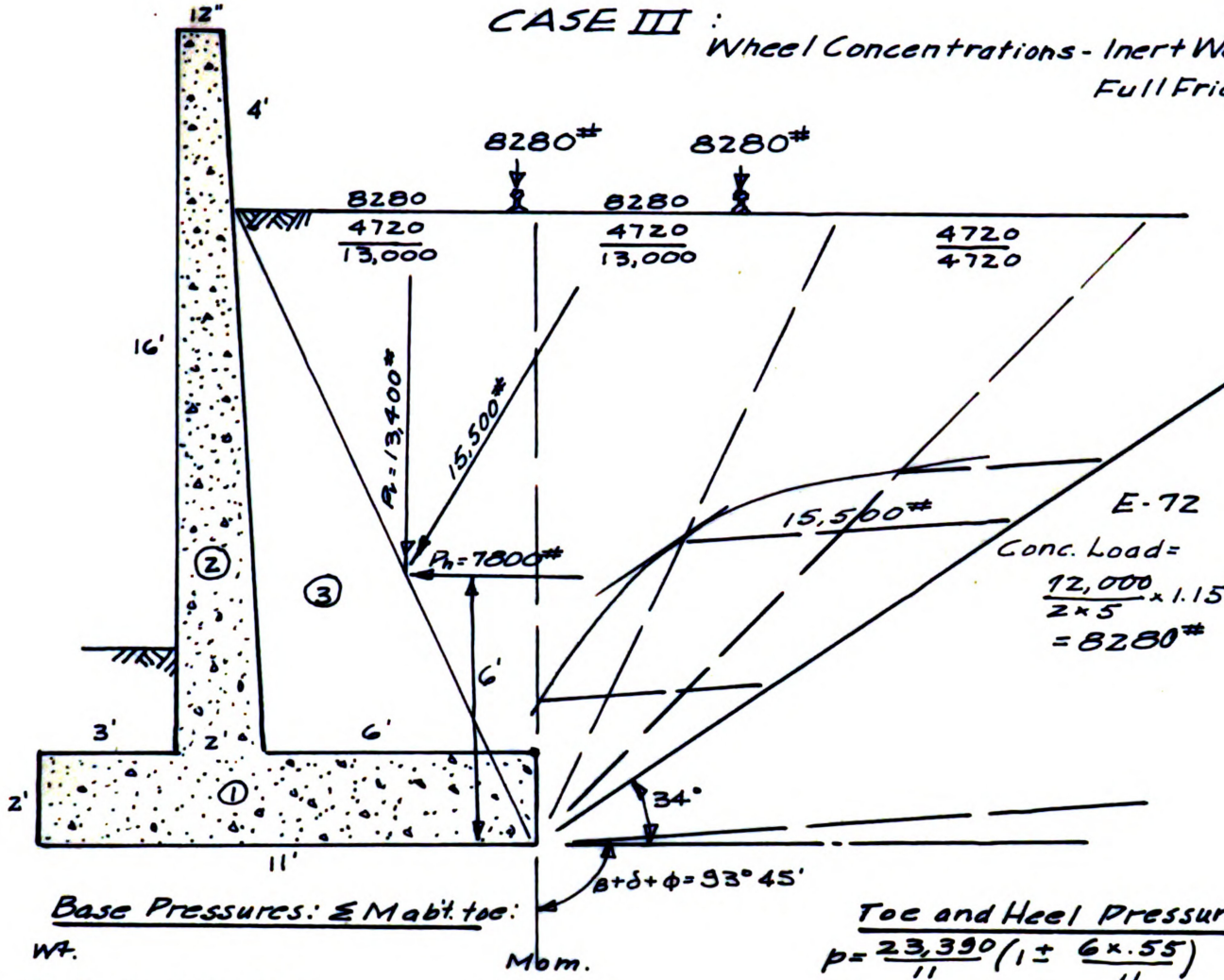

Base Pressures: Σ Mab't. toe:

	Wt.	Mom.
$W_1+W_2+W_3$ =	10,090	51,600
P_v = $\frac{13,400}{23,390}$ × 8.2 =		110,000
		M_R = 162,600 lb.ft.
P_h = 7800 × 6 = M_o =		46,800
23,390		115,800

4.95' from toe

e = 5.5 - 4.95

e = 0.55'

Toe and Heel Pressures:

$$p = \frac{23,390}{11}\left(1 \pm \frac{6 \times .55}{11}\right)$$

$p = 2125 \pm 701$

$p_t = 2826$ psf

$p_h = 1424$ psf

Sliding: $\frac{23,390 \times .466}{7800} = 1.4$

Must Anchor

Overturn: $\frac{M_R}{M_o} = \frac{162,600}{46,800} = 3.5$

SUMMARY OF CASES

	p_{toe}	p_{heel}	Hor. Thrust	M_R/M_o	Sliding Factor
I	2835	1395	6430	3.7	1.51
II	2420	1380	6200	3.71	1.59
III	2826	1424	7800	3.5	1.4

Use Case III for design purposes as it presents the most severe conditions.

CASE III : Wheel Concentrations - Inert Wedge - Full Friction

Base Pressures: Σ Moments toe:

W_4	Mom.
$W_1 + W_2 + W_3 = 10{,}090$	51,600
$P_v = \frac{13{,}400}{23{,}390} \times 8.2 = 110{,}000$	$M_R = 162{,}600$ lb.ft.
$P_h = 7800 \times 6 = M_o = 46{,}800$	

$23{,}390 \overline{)\,110{,}000}$

4.92' from toe

$e = 5.5 - 4.92$

$e = 0.58'$

Toe and Heel Pressures:

$p = \frac{23{,}390}{11}\left(1 \pm \frac{6 \times .58}{11}\right)$

$p = 2125 \pm 701$

$p_t = 2826$ psf

$p_h = 1424$ psf

Sliding: $\frac{23{,}390 \times .466}{7800} = 1.4$ Must Anchor

Overturn: $\frac{M_R}{M_o} = \frac{162{,}600}{46{,}800} = 3.5$

SUMMARY OF CASES

Page	Wheel	Hor. Thrust	M_R/M_o	Sliding Factor
I 2835	1395	6430	3.7	1.51
II 2420	1380	6200	3.71	1.59
III 2826	1424	7800	3.5	1.4

Use Case III for design purposes as it presents the most severe conditions.

STEM DESIGN

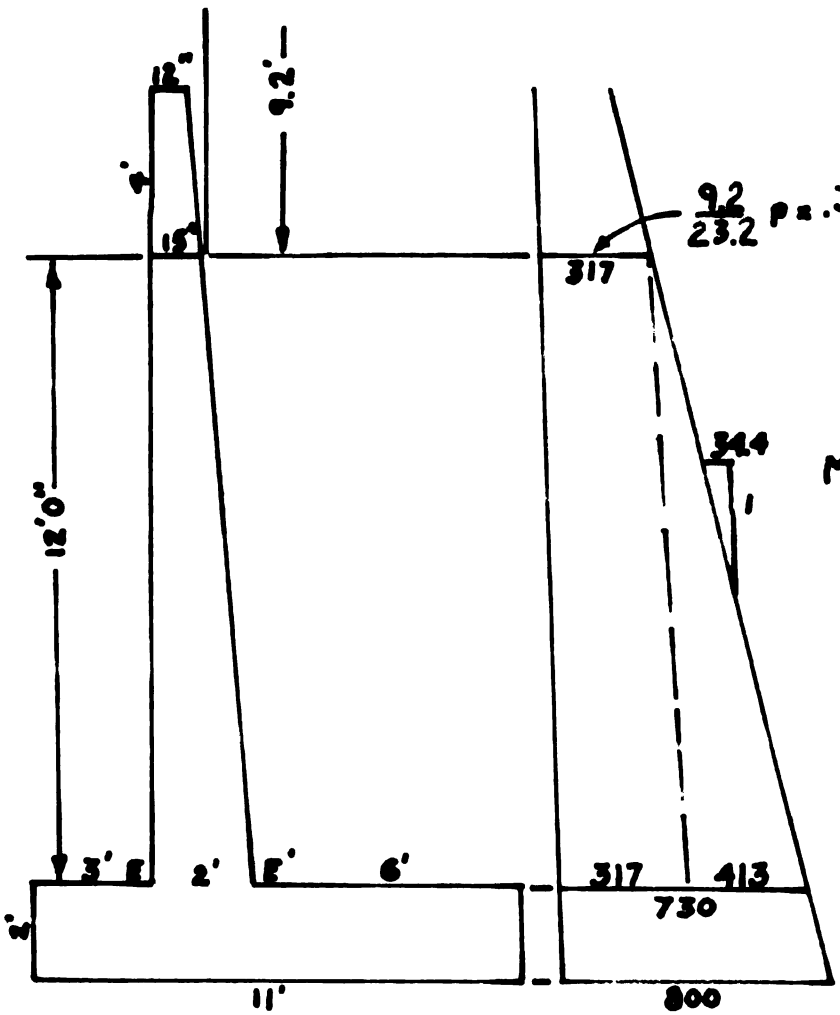

$P_h = 7{,}800 = \frac{14}{2}(p + .397p)$

$p = 800$ p.s.f.

Max Shear & B.M. on Sect. EE'

$V = \frac{14}{2}(730 + 317)$

$V = 7329^{\#}$

$M = 317 \cdot 12 \cdot 6 + 413 \cdot 6 \cdot 4$

$M = 32{,}700'^{\#}$

$d = \frac{V}{bjv} = \frac{7329}{12 \cdot 7/8 \cdot 40} = 17.4''$ $\qquad$ $d = \sqrt{\frac{M}{bR}} = \sqrt{\frac{32{,}700}{140}} = 15.3''$

Use Stem 24" Thick at bottom

STEM DESIGN

$P_n = 7{,}800 = \frac{14}{2}(p + .397p)$

$p = 800$ p.s.f.

Max Shear & B.M. on Sect. EE'

$V = \frac{14}{2}(730 + 317)$

$V = 7329$ #

$M = 317 \cdot 12.6 + 413 \cdot 6.4$

$M = 32{,}700'$#

$d = \frac{V}{bjv} = \frac{7329}{12 \cdot .78 \cdot 40} = 17.4''$ $\qquad d = \sqrt{\frac{M}{bR}} = \sqrt{\frac{32{,}700}{140}} = 15.3''$

Use Stem 24" Thick at bottom

STEM DESIGN

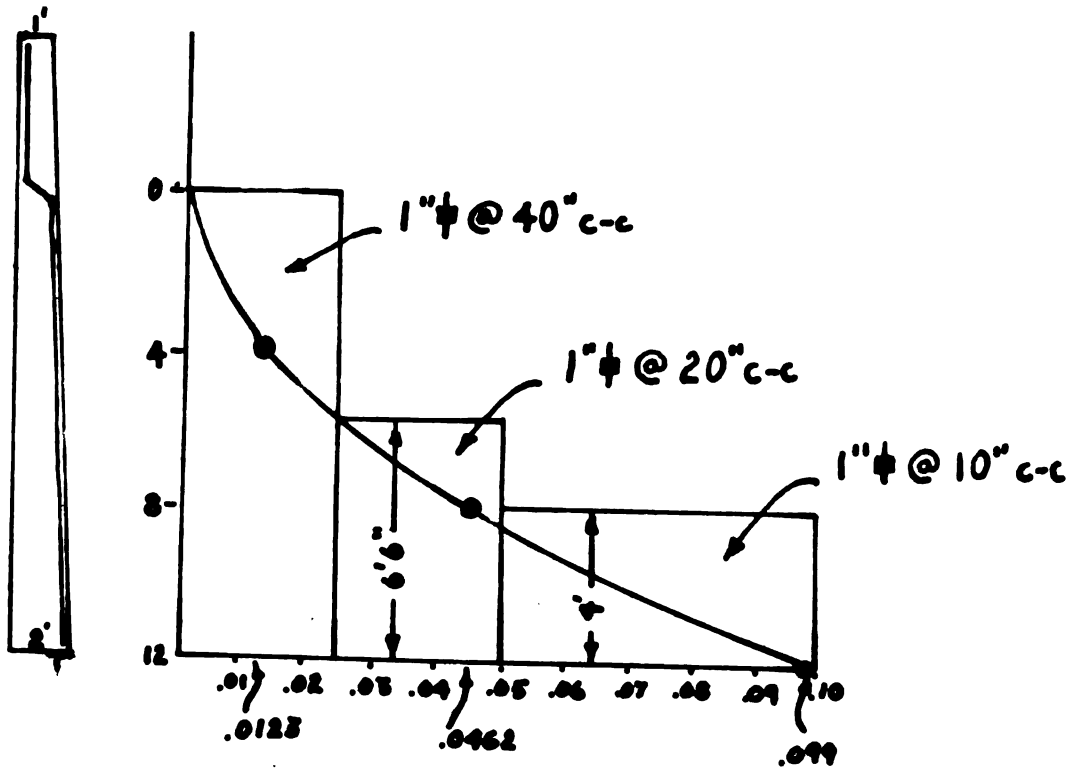

At Any Level:

$$V_x = 317 \cdot h + \frac{34.4}{2} h^2 \qquad M_x = \frac{317 \cdot h^2}{2} + \frac{17.2\, h^3}{3}$$

STEM SCHEDULE

h	V	d	v	M	R	A_s	Rods
4	1545	15"	9.83	2907	10.7	.0123	1"φ @ 40"
8	3640	18"	19.3	13,100	40	.0462	1"φ @ 20"
12	7329	21"	33.3	32,700	57	.099	1"φ @ 10"

$$\mu = \frac{vb}{\Sigma o} = \frac{333 \cdot 12}{4} = 83 \text{ p.s.i.} < 100$$

$$L = \frac{f_s d}{4\mu} = \frac{18000 \cdot 1}{4 \cdot 100} = 45" \text{ (Hook Bottom)}$$

Temp. Steel: $.002 \cdot 12 \cdot 18 = .44 \square''$

STEM DESIGN

At Any Level:

$$V_x = 317 \cdot h + \frac{374.4}{2} h^2 \qquad M_x = \frac{317 \cdot h^2}{2} + \frac{124.8 h^3}{3}$$

STEM SCHEDULE

h	V	d	v	M	R	A_s	Rods
4	1545	15"	9.83	2307	10.7	.0123	1"φ @ 40"
8	3640	18"	13.3	13,100	40	.0462	1"φ @ 20"
12	7329	21"	33.3	32,700	51	.099	1"φ @ 10"

$$v = \frac{Vb}{Ed} = \frac{33.3 \cdot 10}{4} = 83 \text{ p.s.i.} < 100$$

$$L = \frac{f_s d}{4v} = \frac{18000 \cdot 1}{4 \cdot 100} = 45" \text{ (Hook Bottom)}$$

Temp. Steel: $.002 \cdot 12 \cdot 18 = .44 \square''$

Railroad Cantilever Wall

TOE DESIGN FOR CASE III
RAIL ROAD WALL

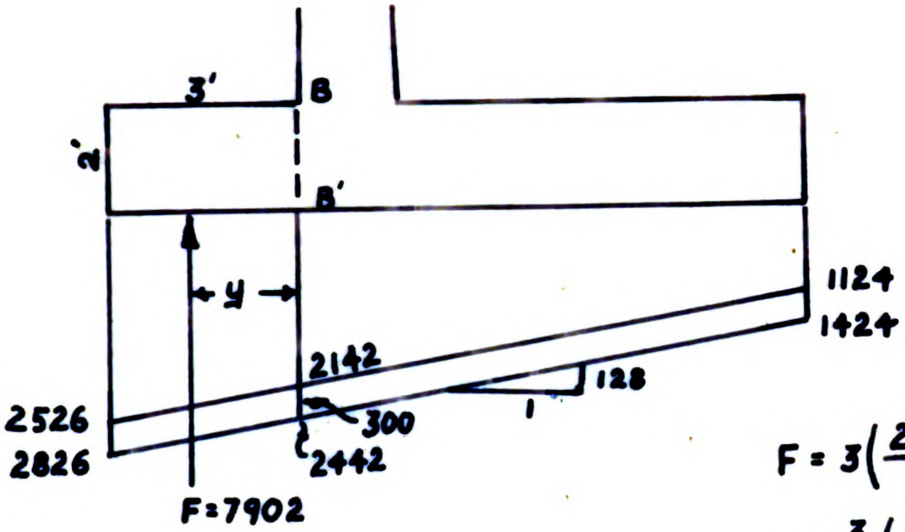

$$F = 3\left(\frac{2526+2142}{2}\right) = 7902^{\#}$$

$$y = \frac{3}{3}\left(\frac{2142+2\cdot 2526}{2526+2142}\right) = 1.54'$$

Max Shear & B.M. on B-B'

$V = 7{,}902^{\#}$

$B.M. = V\cdot y = 12{,}200'^{\#}$

$$v = \frac{V}{bjd} = \frac{7902}{12\cdot 7/8\cdot 21} = 35.8 \text{ p.s.i.}$$

$$R = \frac{M}{bd^2} = \frac{12{,}200}{1\cdot 21^2} = 27.6 \quad (f_c \text{ is very low})$$

$$A_s = \frac{M}{f_s jd} = \frac{12{,}200}{18{,}000\cdot 7/8\cdot 21} = .0368 \ \square''/''$$

Use $\frac{1}{2}$" ϕ at 6" c-c gives .0416 $\square''/''$

$$\mu = \frac{vb}{\Sigma o} = \frac{40\cdot 6}{2} = 120 \text{ p.s.i.} \quad (\text{Spec. Anch.})$$

TOE DESIGN FOR CASE III
RAIL ROAD WALL

$$y = \frac{3}{4}\left(\frac{214z + 2\cdot 252b}{252b + 214z}\right) = 1.54'$$

$$F = 3\left(\frac{252b + 214z}{2}\right) = 7902^{\#}$$

Max Shear & B.M. on B-B'

$V = 7{,}902^{\#}$

$B.M. = V\cdot y = 12{,}200'^{\#}$

$$v = \frac{V}{bjd} = \frac{7902}{12\cdot 7/8\cdot 21} = 35.8 \text{ p.s.i.}$$

$$R = \frac{M}{bd^2} = \frac{12{,}200}{1\cdot 21^2} = 27.6 \quad (f_c \text{ is very low})$$

$$A_s = \frac{M}{f_s jd} = \frac{12{,}200}{18{,}000\cdot 7/8\cdot 21} = .0368 \text{ □"/"}$$

Use $\frac{1}{2}$ "ϕ at 6" c-c gives .0416 □"/"

$$p = \frac{vb}{\Sigma o} = \frac{40\cdot 6}{2} = 120 \text{ p.s.i.} \quad (\text{Spec. Anch.})$$

HEEL DESIGN

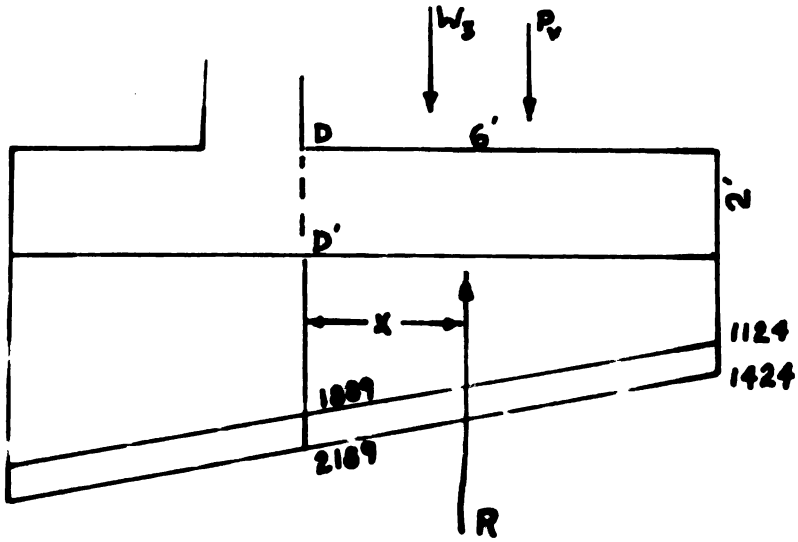

$$\left(1124\cdot 6\cdot\frac{6}{2}\right)+\left(765\cdot\frac{6}{2}\cdot\frac{6}{3}\right) = \overset{R}{x}\left(1124\cdot 6 + 765\cdot 3\right)$$

$x = 2.75'$

$R = 9045^{\#}$

	wt.		arm		Mom.
$P_v =$	$-13{,}400^{\#}$	$\cdot$	$3.2'$	$=$	$-42{,}900'^{\#}$
$W_s =$	$-3{,}090$	$\cdot$	1.45	$=$	$-4{,}480$
	$-16{,}490$				$-48{,}380$
$R =$	$+9{,}045$	$\cdot$	2.75	$=$	$+24{,}800$
$V =$	$7{,}445$		$M =$		$23{,}580$

$$d = \frac{V}{vjb} = \frac{7445}{40\cdot 7/8\cdot 12} = 17.7'' \qquad d = \sqrt{\frac{M}{Rb}} = \sqrt{\frac{23{,}580}{140}} = 13''$$

Keep Heel 24" Thick.

$$R = \frac{M}{bd^2} = 53.4 < 140 \therefore f_c \text{ is low.}$$

$$A_s = \frac{23{,}580}{18000\cdot 7/8\cdot 21} = .0713^{\square''}/'' \text{ Top} \qquad \text{Use } 1''\phi \text{ at } 11'' \text{ c-c gives } .0718^{\square''}/''$$

$$\mu = \frac{vb}{\Sigma o} = \frac{40\cdot 11}{\pi} = 118 \text{ p.s.i.} > 100 \quad \therefore \text{ Spec. Anch.}$$

Railroad Cantilever Wall

HEEL DESIGN

$$\left(1124 \cdot 6 \cdot \frac{6}{2}\right) + \left(765 \cdot \frac{6}{2} \cdot \frac{6}{3}\right) = x\left(1124 \cdot 6 + 765 \cdot 3\right)$$

$$x = 2.75'$$

$$R = 9045^{\#}$$

	wt.	arm	Mom.
P_v =	$-13{,}400^{\#}$	· 3.2' =	$-42{,}900'^{\#}$
W_s =	$-3{,}090$	· 1.45 =	$-4{,}480$
	$-16{,}490$		$-48{,}380$
R =	$+9045$	· 2.75 =	$+24{,}800$
V =	$7{,}445$	M =	$23{,}580$

$$d = \frac{V}{vjb} = \frac{7445}{40 \cdot 7/8 \cdot 12} = 17.7'' \qquad d = \sqrt{\frac{M}{Rb}} = \sqrt{\frac{23580}{140}} = 13''$$

Keep Heel 24" Thick.

$$R = \frac{M}{bd^2} = 53.4 < 140 \therefore f_c \text{ is low.}$$

$$A_s = \frac{23{,}580}{18000 \cdot 7/8 \cdot 21} = .0713 \text{ in}^2/\text{ft} \quad \text{Top} \quad \text{Use } 1''\phi \text{ at } 11'' \text{ c-c gives } .0718 \text{ in}^2/\text{ft}$$

$$p = \frac{100}{E_0} = \frac{100 \cdot 11}{9} = 118 \text{ p.s.i.} > 100 \therefore \text{Spec. Anch.}$$

Railroad Cantilever Wall

CUT OFF WALL

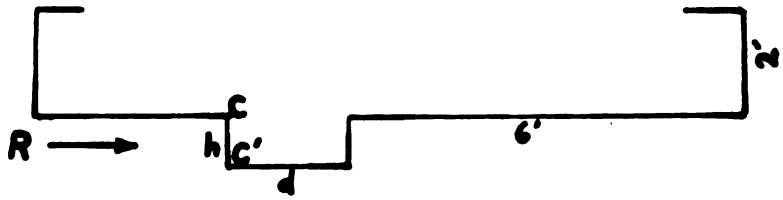

Passive Earth Pressure $= wh\left(\frac{1+\sin 34^\circ}{1-\sin 34^\circ}\right)$

at C-C' $wh = 2444 \pm$ p.s.f.

Case III

Possible Earth Resistance $= 3.54\,wh = 8{,}650$ p.s.f.

To make Sliding Factor = 2 $R = 2 \cdot 7{,}800 - .466 \cdot 23{,}390$

$= 4{,}700^{\#}$ req'd

Min. $h = \frac{4700}{8650} = .54'$ Use $\underline{h = 9''}$

$d = \frac{4700}{9 \cdot 7/8 \cdot 40} = \underline{15''}$

on C-C' $V = 4700^{\#}$

$M = V\frac{h}{2} = 21{,}200''^{\#}$

IF No Tension Reinforcement

$d = \sqrt{\frac{21{,}200 \cdot 45}{12 \cdot 60}} = 13.3''$

Use $d = \underline{2'}$

CUT OFF WALL

Passive Earth Pressure = $wh\left(\frac{1+\sin 34°}{1-\sin 34°}\right)$

at C-C' $wh = 244\# \pm$ p.s.f.

Case III

Possible Earth Resistance = $3.54\,wh = 8{,}650$ p.s.f.

To make Sliding Factor = 2 $R = 2 \cdot 7{,}800 = .466 \cdot 23{,}300$

$= 4{,}700^{\#}$ req'd

Min. $h = \frac{4700}{8650} = .54'$ Use $\underline{h = 9''}$

$d = \frac{4700}{9 \cdot 75 \cdot 40} = \underline{15''}$

on C-C' $V = 4700^{\#}$

$M = V\frac{h}{2} = 21{,}200''^{\#}$

If No Tension Reinforcement

$d = \sqrt{\frac{21200 \cdot 45}{12 \cdot 60}} = 13.3''$

Use $d = \underline{2'}$

Railroad Cantilever Wall

DESIGN OF TOP OF R.R. WALL

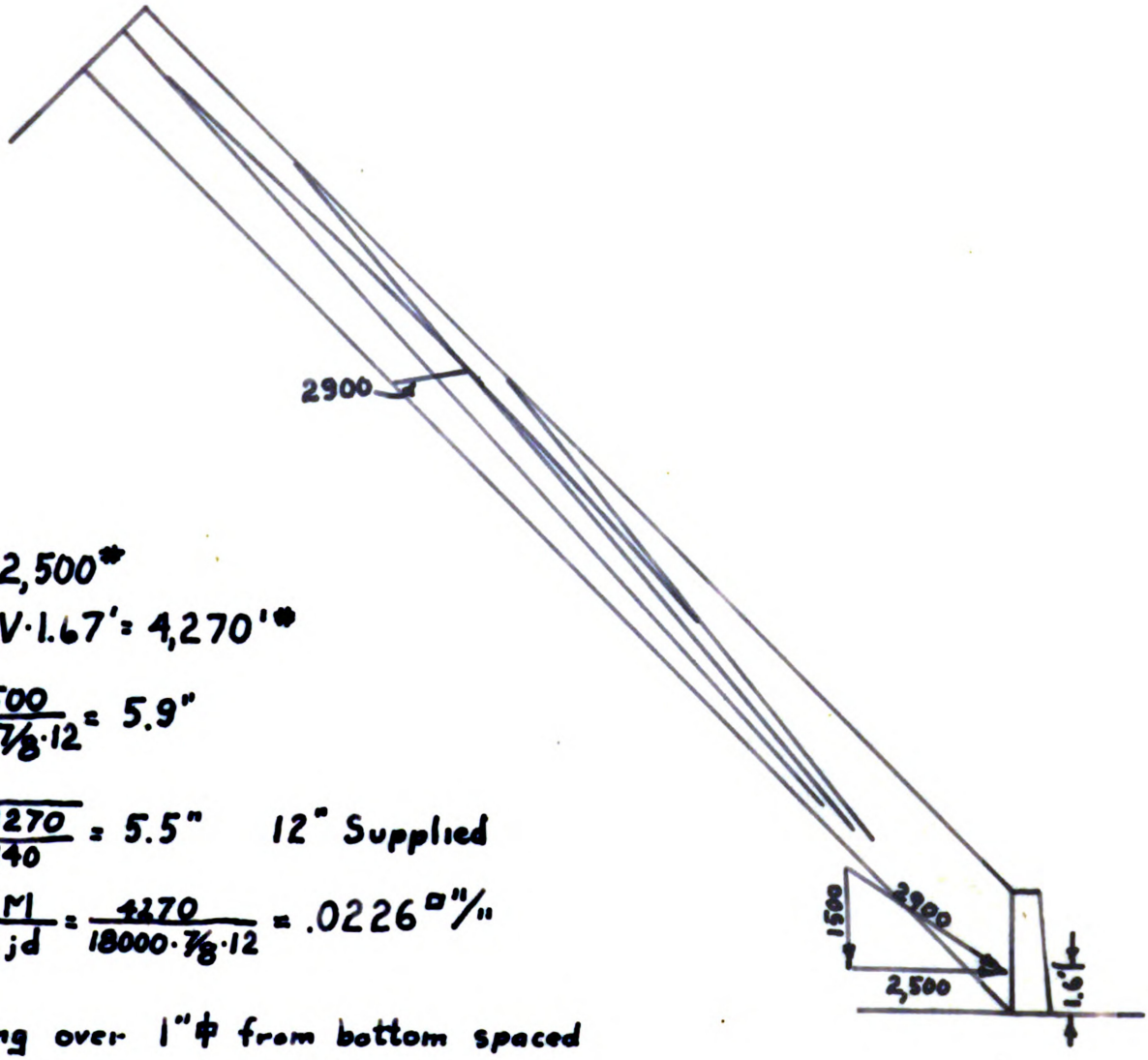

$V = 2{,}500^{\#}$

$M = V \cdot 1.67' = 4{,}270'^{\#}$

$d = \frac{2500}{40 \cdot 7/8 \cdot 12} = 5.9''$

$d = \sqrt{\frac{4270}{140}} = 5.5''$ 12" Supplied

$A_s = \frac{M}{f_s j d} = \frac{4270}{18000 \cdot 7/8 \cdot 12} = .0226^{\square''}/''$

Bending over 1"φ from bottom spaced at 40" supplies $.025^{\square''}/''$

DESIGN OF TOP OF R.R. WALL

$V = 2{,}500^{\#}$

$M = V \cdot 1.67' = 4{,}270'^{\#}$

$d = \frac{2500}{40 \cdot 7/8 \cdot 12} = 5.9''$

$d = \sqrt{\frac{4270}{140}} = 5.5''$ 12" Supplied

$A_s = \frac{M}{f_s j d} = \frac{4270}{18000 \cdot 7/8 \cdot 12} = .0226 \square''/''$

Bending over 1"ϕ from bottom spaced at 40" supplies .025 □"/"

Railroad Cantilever Wall

DETAILS OF RAILROAD CANTILEVER WALL

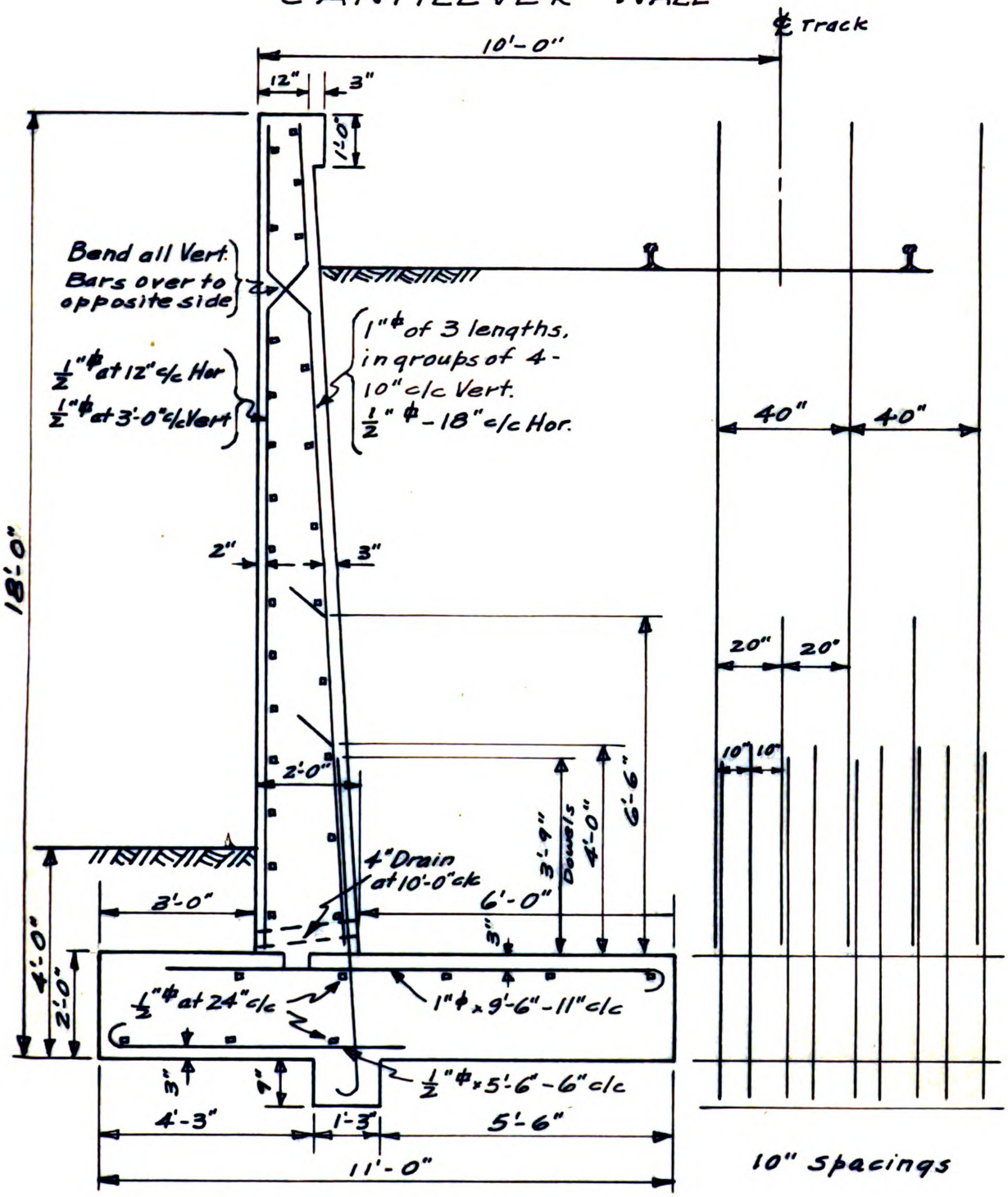

DETAILS OF RAILROAD CANTILEVER WALL

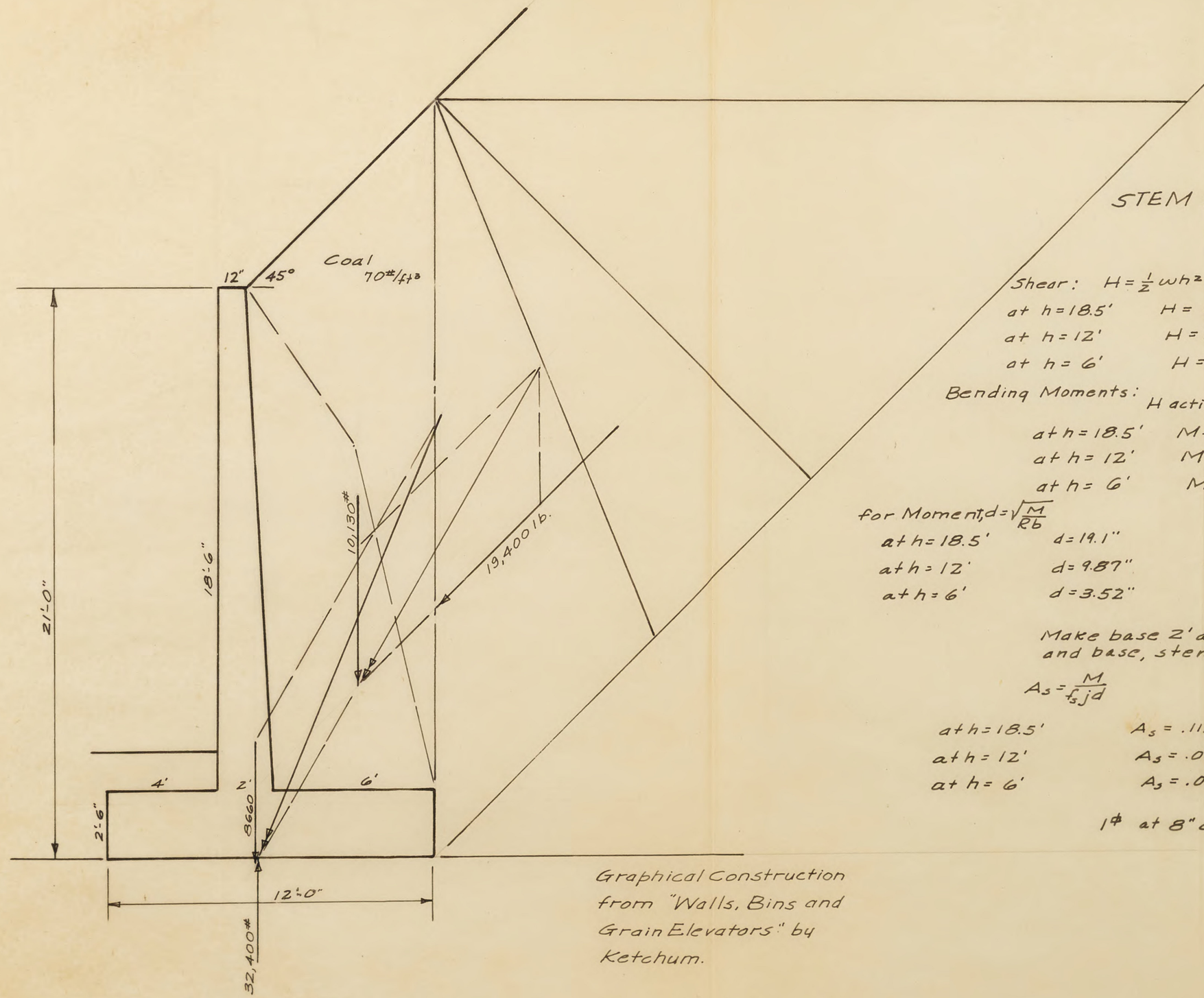

Graphical Construction from "Walls, Bins and Grain Elevators" by Ketchum.

STEM DESIGN,

- Inert Prism
- Full Friction

Shear: $H = \frac{1}{2} w h^2 \cos^2 \phi$

at $h = 18.5'$ $H = 6000$ lb.

at $h = 12'$ $H = 2520$ lb.

at $h = 6'$ $H = 630$ lb.

Bending Moments: H acting at 1/3 ht.

at $h = 18.5'$ $M = 37{,}000$ lb. ft.

at $h = 12'$ $M = 10{,}080$ lb. ft.

at $h = 6'$ $M = 1{,}260$ lb. ft.

for Moment, $d = \sqrt{\frac{M}{Rb}}$

at $h = 18.5'$ $d = 19.1''$

at $h = 12'$ $d = 9.87''$

at $h = 6'$ $d = 3.52''$

for Shear $d = \frac{V}{bjv}$

at $h = 18.5'$; $d = 14.3''$

Moment controls

Make base 2' at junction of stem and base, stem 12" at top.

$A_s = \frac{M}{f_s j d}$

at $h = 18.5'$ $A_s = .112 \square''/in$

at $h = 12'$ $A_s = .038 \square''/in$

at $h = 6'$ $A_s = .0062 \square''/in$

1# at 8" c.c. gives $.125 \square''/in$

(see chart on next page)

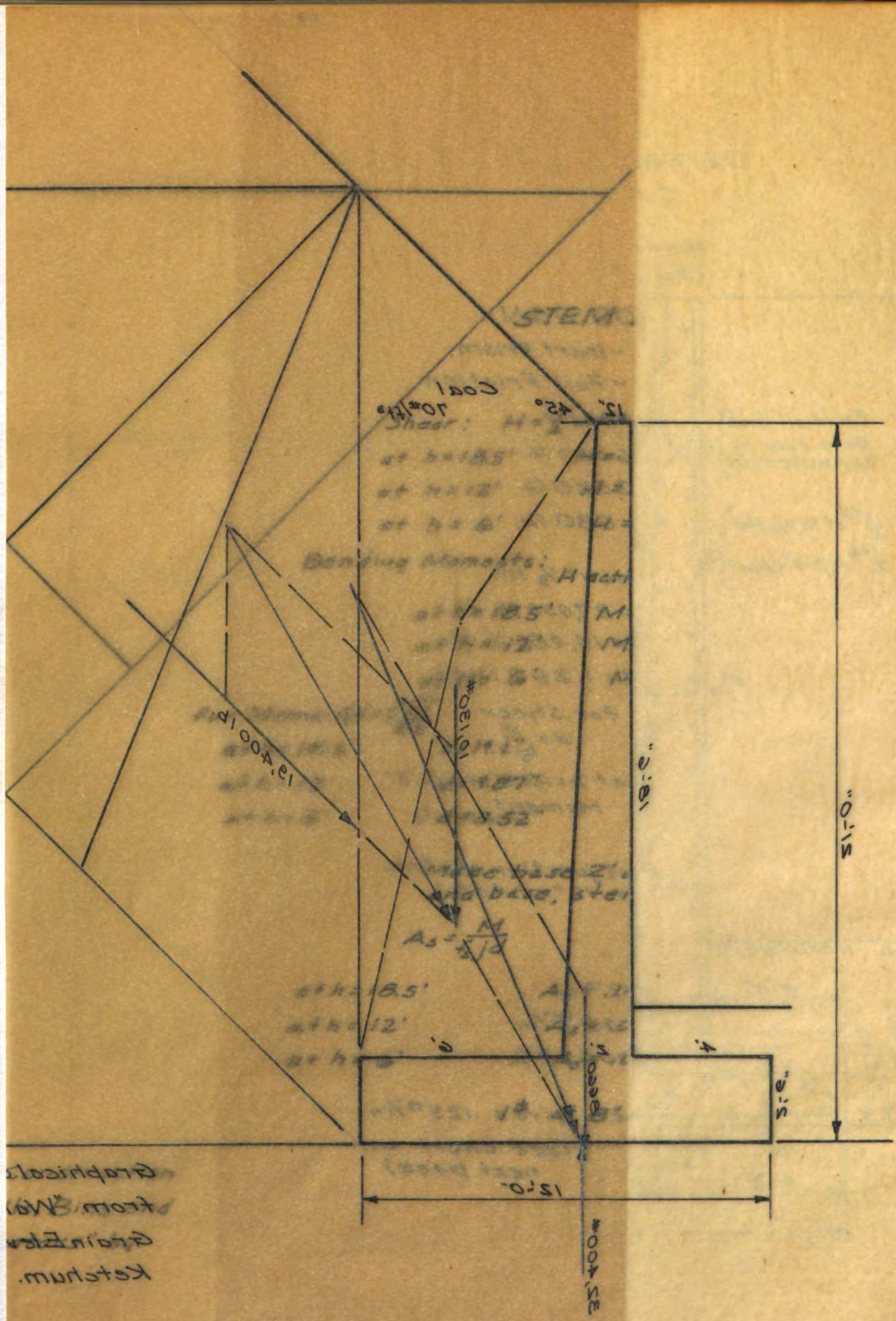

Cantilever Outside Wall

STEM SCHEDULE FOR STEEL

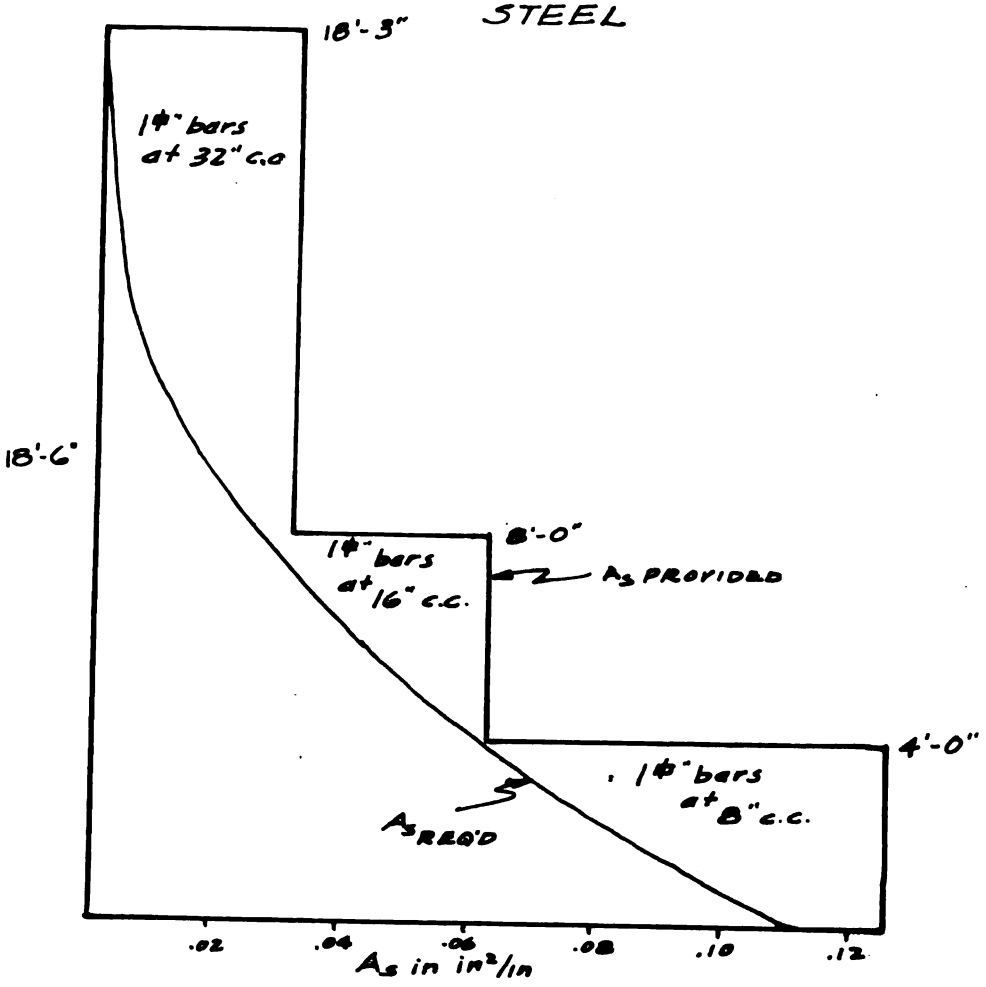

Bond:

$$u = \frac{V}{\Sigma o j d} = \frac{6000}{4 \times \frac{7}{8} \times 21} = 81.6 \text{ psi}$$

Anchorage:

$$L = \frac{f_s d}{4u} = \frac{18{,}000 \times 1}{4 \times 100} = 45''$$

Hooks Req'd.

Temperature Steel:

	Front of Stem		Back of Stem
Hor.	$\frac{1}{2}$φ" at 12"	18 bars	$\frac{1}{2}$φ" at 24" · 9 bars
Vert.	$\frac{1}{2}$φ at 30"		

Cantilever Outside Wall.

STEM SCHEDULE FOR STEEL

Vert. $\frac{1}{2}$ #4 at 30"

Hor. $\frac{1}{2}$ #4" at 12" 18 bars

Front of Stem

$\frac{1}{2}$ #4" at 24" · 4 bars

Back of Stem

Temperature Steel:

Hooks req'd.

$$L = \frac{f_s d}{4u} = \frac{18{,}000 \times 1}{4 \times 100} = 45"$$

Anchorage:

Bond:

$$u = \frac{V}{\Sigma o j d} = \frac{6000}{4 \times \frac{7}{8} \times 21} = 81.6 \text{ psi}$$

FOOTING DESIGN

$P' = \frac{wh^2}{2} \cos\phi = \frac{1}{2} \cdot 70 \cdot (28)^2 \cdot .707 = 19{,}400^{\#}$

acting at $\frac{1}{3} \cdot 28 = 9.34'$ up.

P' combined graphically with fill weight = 10,130# and wall weight = 8,660# to give resultant base pressure in vertical direction = 32,400#.

Resultant cuts base .5' from center of wall.

Toe & Heel pressures:

$$p = \frac{32{,}400}{12} \pm \frac{32{,}400 \cdot 6 \cdot .5}{144}$$

$p_t = 3375$ p.s.f.

$p_h = 2025$ p.s.f.

Heel Design:

Max. Shear = weight of fill above heel = V = 9440#

$v = \frac{V}{bjd} = \frac{9440}{12 \cdot 7/8 \cdot 27} = 33.3$ p.s.i. (allowable 40)

B.M. = $9440 \cdot 3.1 = 29{,}300'^{\#}$

$A_s = \frac{M}{f_s jd} = \frac{29{,}300}{18{,}000 \cdot 7/8 \cdot 27} = .069$ □"/'

Use 3/4" ϕ bars at 8" c-c gives .0703 □"/'

$\mu = \frac{V}{\Sigma o jd} = \frac{9440}{4 \cdot 7/8 \cdot 27} = 99$ p.s.i. (allowable 100)

Cantilever Outside Wall

FOOTING DESIGN

$P' = \frac{wh^2}{2}\cos\phi = \frac{1}{2}\cdot 70\cdot(2.6)^2\cdot .707 = 19{,}400^{\#}$

acting at $\frac{1}{3}\cdot 2.6 = 9.34'$ up.

P' combined graphically with fill weight = $10{,}130^{\#}$ and wall weight = $8{,}660^{\#}$ to give resultant base pressure in vertical direction = $32{,}400^{\#}$.

Resultant cuts base .5' from center of wall.

Toe & Heel pressures:

$$p = \frac{32{,}400}{12} \pm \frac{32{,}400\cdot 6\cdot .5}{144}$$

$$p_t = 3375 \text{ p.s.f.}$$

$$p_h = 2025 \text{ p.s.f.}$$

Heel Design:

Max. Shear = weight of fill above heel = V = $9440^{\#}$

$$v = \frac{V}{bjd} = \frac{9440}{12\cdot .78\cdot 27} = 33.3 \text{ p.s.i.} \quad (\text{allowable } 40)$$

$$B.M. = 9440\cdot 3.1 = 29{,}300'^{\#}$$

$$A_s = \frac{M}{f_s jd} = \frac{29{,}300}{18{,}000\cdot .78\cdot 27} = .069 \text{ in}^2$$

Use 3/4" ϕ bars at 8" c-c gives .070 in²/ft

$$p = \frac{V}{\Sigma o jd} = \frac{9440}{4\cdot .78\cdot 27} = 93 \text{ p.s.i.} \quad (\text{allowable } 100)$$

Cantilever Outside Wall

TOE DESIGN

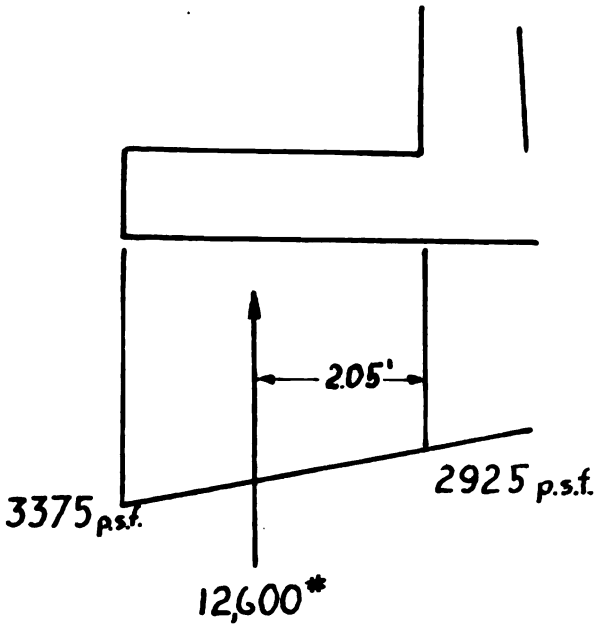

Pressure on bottom of toe = 12,600# = V

$$v = \frac{V}{bjd} = \frac{12600}{12 \cdot 7/8 \cdot 27} = 43.7 \text{ p.s.i.}$$

(allowable = 60 p.s.i.)

B.M. at toe = 12,600# · 2.05' = 25,900'#

$$d = \frac{V}{bjv} = \frac{12,600}{12 \cdot 7/8 \cdot 60} = 20''$$

$$d = \sqrt{\frac{M}{bR}} = \sqrt{\frac{25900}{140}} = 13.6''$$ Toe 2½' thick

$$A_s = \frac{M}{f_s jd} = \frac{25900}{18000 \cdot 7/8 \cdot 27} = .0693 \text{ □"/'}$$

Use 3/4" ϕ bars at 8" c-c gives .0703 □"/'

Bond: $$\mu = \frac{V}{\Sigma_o jd} = \frac{12600}{4 \cdot 7/8 \cdot 27} = 133 \text{ p.s.i.}$$ Spec. Anch.

Cantilever Outside Wall

TOE DESIGN

Pressure on bottom of toe = 12,600* = V

$v = \frac{V}{bjd} = \frac{12600}{12 \cdot 7/8 \cdot 27} = 43.7$ p.s.i.

(allowable = 60 p.s.i.)

B.M. at toe = 12,600* · 2.05' = 25,900'*

$d = \frac{V}{bjv} = \frac{12600}{12 \cdot 7/8 \cdot 60} = 20''$

$d = \sqrt{\frac{M}{bR}} = \sqrt{\frac{25900}{140}} = 13.6''$ Toe 2½' thick

$A_s = \frac{M}{f_s jd} = \frac{25900}{18000 \cdot 7/8 \cdot 27} = .0693$ □"/'

Use 3/4" ϕ bars at 8" c-c gives .0703 □"/'

Bond: $u = \frac{V}{\Sigma o jd} = \frac{12600}{4 \cdot 7/8 \cdot 27} = 133$ p.s.i. Spec. Arch.

Cantilever Outside Wall

CUT OFF WALL

Passive Earth Pressure $= wh\left(\frac{1+\sin\phi}{1-\sin\phi}\right) = wh(3.5)$

At front of cut-off $wh = 2925$ p.s.f.

Possible Resistance $= 2925 \cdot 3.5 = 10{,}250$ p.s.f.

Make S.F. $= 2$ $\quad R = 2 \cdot 13{,}700 - .466 \cdot 32{,}400$

$R = 12{,}300$

Min. $h = \frac{12300}{10250} = 1.2'$ deep $\quad$ Use $h = 1'3''$

$V = 10{,}250^{\#}$

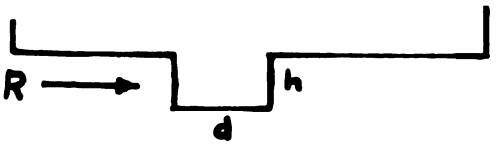

$d = \frac{10250}{12 \cdot 7/8 \cdot 40} = 24.3''$ $\quad$ Use $d = 2'$

Overturn:

Resultant striks in middle $\frac{1}{3}$rd. therefor wall is safe.

Sliding:

$P_h = .707 \cdot 19{,}400 = 13{,}700^{\#}$

$$S.F. = \frac{32{,}400 \cdot \tan 25^\circ}{13{,}700} = 1.10$$

Cut off wall as above needed

Cantilever Outside Wall

CUT OFF WALL

Passive Earth Pressure = $wh\left(\frac{1+\sin\phi}{1-\sin\phi}\right) = wh(3.5)$

At front of cut-off $wh = 2925$ psf.

Possible Resistance = $2925 \cdot 3.5 = 10{,}250$ psf.

Make S.F. = 2 $\quad R = 2 \cdot 13{,}700 - .400 \cdot 32{,}400$

$R = 12{,}320$

Min. $h = \frac{12320}{10250} = 1.2'$ deep $\quad$ Use $h = 1'3''$

$V = 10{,}250$#

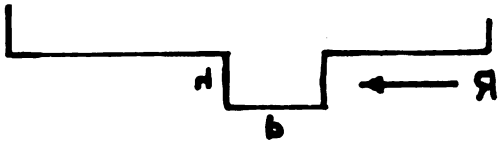

$d = \frac{10250}{12 \cdot 76 \cdot .40} = 24.3''$ $\quad$ Use $d = 2'$

Overturn:

Resultant strikes in middle $\frac{1}{3}$rd. therefor wall is safe.

Sliding:

$P_h = .707 \cdot 19{,}400 = 13{,}700$#

$S.F. = \frac{32{,}400 \cdot \tan 22^\circ}{13{,}700} = 1.10$

Cut off wall as above needed

Cantilever Retaining Wall

DETAILS OF CANTILEVER OUTSIDE WALL

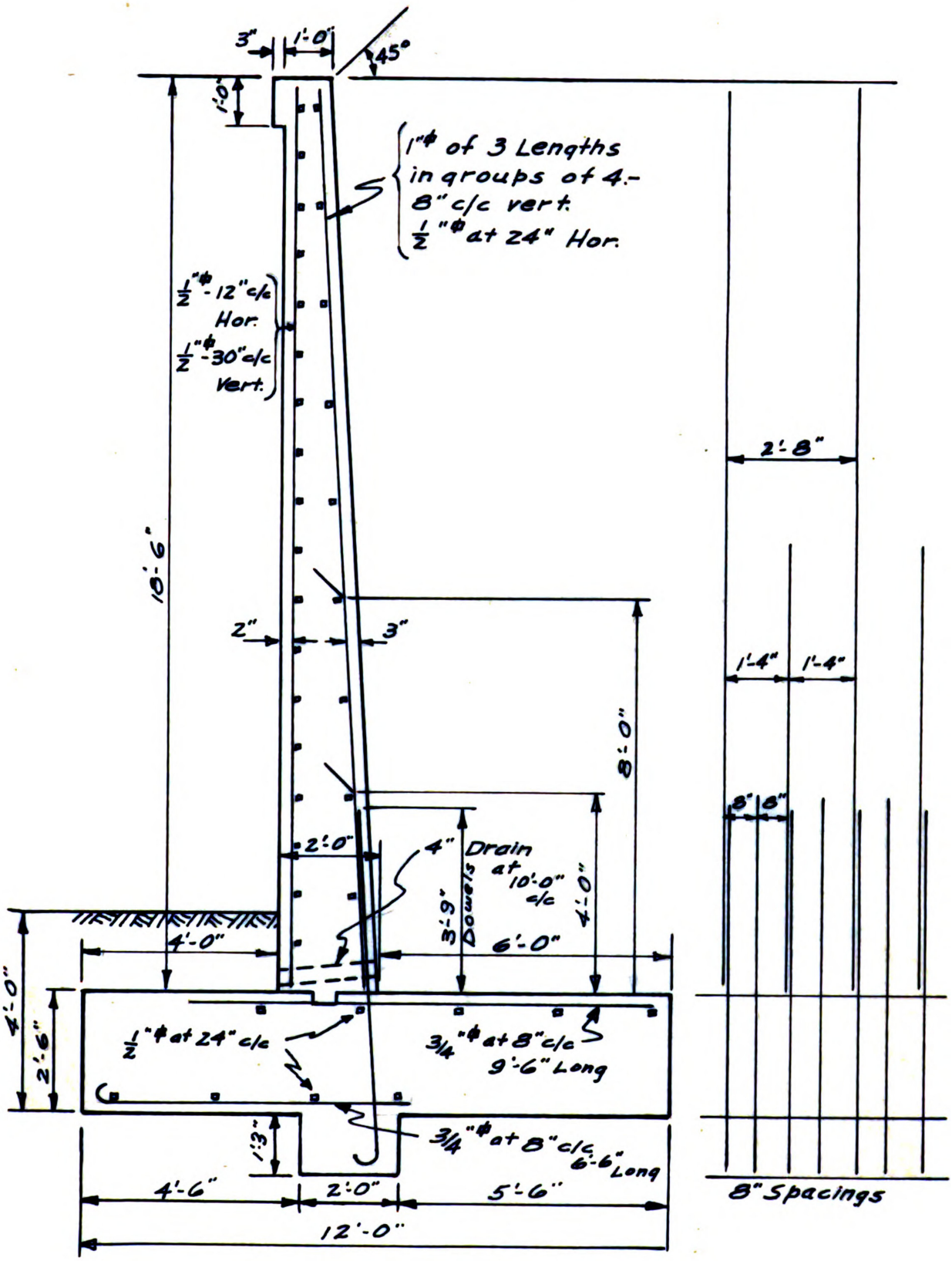

DETAILS OF CANTILEVER OUTSIDE WALL

DESIGN OF VERTICAL SLAB

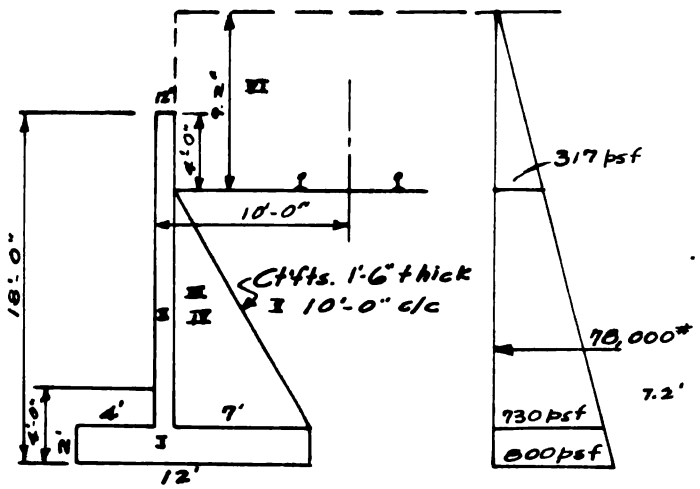

from case III (cont.) P = 7800#

$7800 = \frac{14}{2}(p + .396p)$, $p = 800$ psf

P for 10' of wall = 78,000#

$M_o = 78{,}000 \times 7.2 = 562{,}000$ #ft.

WT	W	arm	Mom.
I 2×12×150×10	36,000	6'	216,000
II 16×1×150×10	24,000	4.5'	108,000
III 7×8.5×14×100	95,000	8.5'	807,000
IV 7×$\frac{14}{2}$×1.5×150	11,000	7.33'	80,700
V 1.5×$\frac{16}{2}$×7×100	8,400	9.67'	81,100
VI 5.2×7×100×10	36,000	8.5'	306,000
	210,400		1,598,800 = M_R
			562 000 = M_o
			210,400 ⌊ 1,036,800
			4.93' from toe

$e = 6 - 4.93$

$e = 1.07'$

Toe and Heel Pressures:

$p = \frac{212{,}000}{12 \times 10}\left(1 \pm \frac{6 \times 1.07}{12}\right)$

$p_t = 2709$ psf

$p_h = 821$ psf

Overturn:

$\frac{M_R}{M_o} = \frac{1{,}598{,}000}{562{,}000} = 2.85$

Slide:

$\frac{210{,}000 \times .466}{78000} = 1.26$

Must Anchor

Shear: $d = \frac{V}{bjv} = \frac{3100}{12 \times \frac{7}{8} \times 40} = 7.4"$

$V = \frac{wl}{2} = 3100$#

Moment:

Int: $M = \frac{1}{12} wl^2 = \frac{730 \times 8.5^2}{12} = 4400$ #ft.

Ext: $M = \frac{1}{10} wl^2 = \frac{730 \times 8.5^2}{10} = 5270$ #ft.

$d = \sqrt{\frac{M}{Rb}}$ $\quad d = \sqrt{\frac{4400}{140}} = 5.6"$

$d = \sqrt{\frac{5270}{140}} = 6.14"$

Steel:

$A_s = \frac{M}{f_s j d}$

Int. $A_s = \frac{4400}{18{,}000 \times \frac{7}{8} \times 9} = .0311$ □"/in

Ext. $A_s = \frac{5270}{18000 \times \frac{7}{8} \times 9} = .0418$ □"/in

DESIGN OF VERTICAL SLAB

from case III (cont.) P = 7800#

$7800 = \frac{1}{4}(p + 3.46p)$, $p = 800$ psf

P for 10' of wall = 78,000#

$M_o = 78{,}000 \times 7.2 = 562{,}000$ #-ft.

WT	W	arm	Mom.
I 2×12×150×10	36,000	6'	216,000
II 16×1×150×10	24,000	4.5'	108,000
III 7×8.5×14×100	95,000	8.5'	807,000
IV 7×$\frac{1}{4}$×1.5×150	11,000	7.33'	80,700
V 1.5×$\frac{1}{4}$×7×100	8,400	4.67'	81,100
VI 5.2×7×100×10	36,000	8.5'	306,000
	210,400		1,598,800 = M_R

562,000 = M_o

Top and Heel Pressure:

$p = \frac{210{,}400}{12 \times 10}\left(1 \pm \frac{6 \times 1.07}{12}\right)$

$p_H = 2709$ psf

$p_T = 821$ psf

Overturn:

$\frac{M_R}{M_o} = \frac{1{,}598{,}000}{562{,}000} = 2.85$

$e = 1.07'$

$e = 6 - 4.73$

4.73' from toe

210,400) 1,036,800

Slide:

$\frac{210{,}000 \times .466}{78000} = 1.26$

Must Anchor

Shear: $V = \frac{w_1}{2} = 3100$#

$d = \frac{V}{bjv} = \frac{3100}{12 \times \frac{7}{8} \times 40} = 7.4"$

Moment:

Ext: $M = \frac{1}{10} w l^2 = \frac{730 \times 8.5^2}{10} = 5270$ #-ft.

$d = \sqrt{\frac{M}{Rb}}$ $d = \sqrt{\frac{5270}{140}} = 5.6"$

Int: $M = \frac{1}{12} w l^2 = \frac{730 \times 8.5^2}{12} = 4400$ #-ft.

$d = \sqrt{\frac{4400}{140}} = 5.6"$

Steel:

$A_s = \frac{M}{f_s j d}$

$d = \sqrt{\frac{5270}{140}} = 6.14"$

Int. $A_s = \frac{4400}{18{,}000 \times \frac{7}{8} \times 4} = .0311$ □"/in

Ext. $A_s = \frac{5270}{18000 \times \frac{7}{8} \times 4} = .0418$ □"/in

DESIGN OF STEEL IN VERTICAL SLAB.

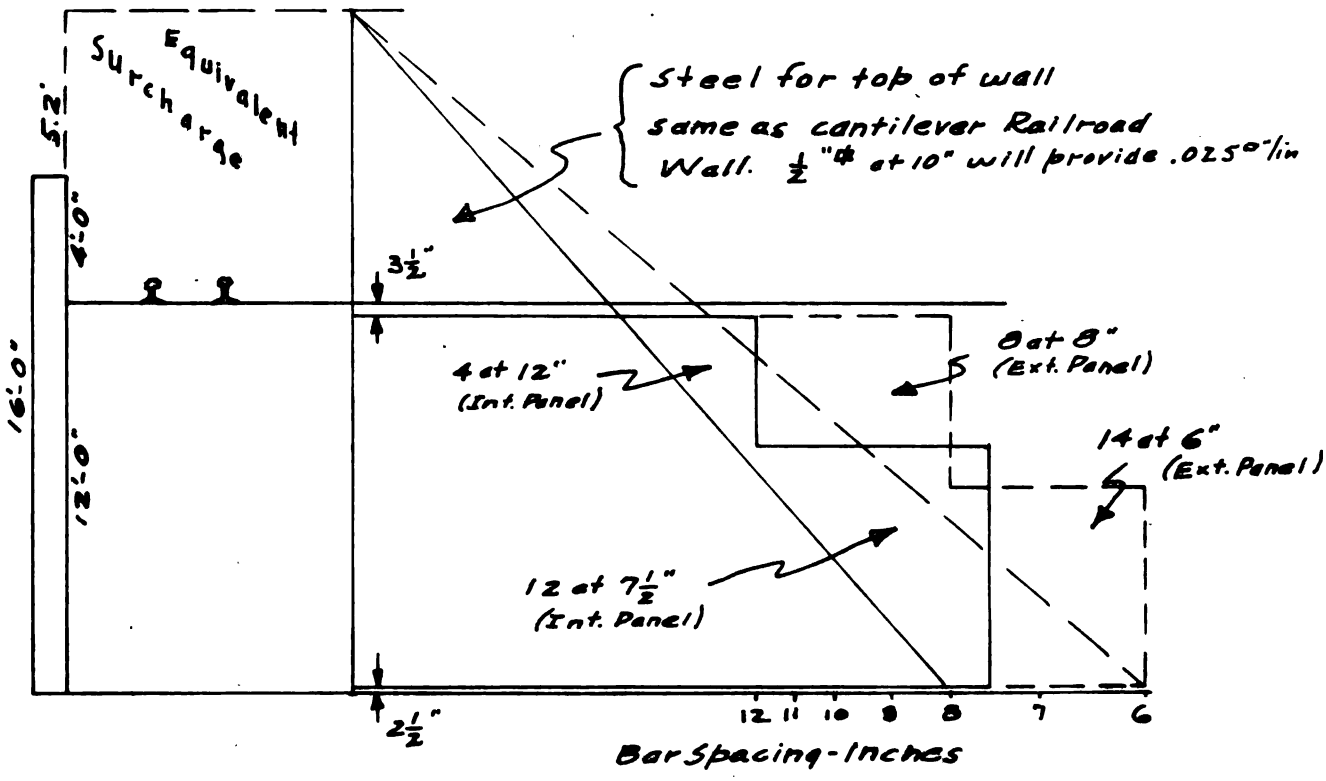

DESIGN OF CUT-OFF WALL

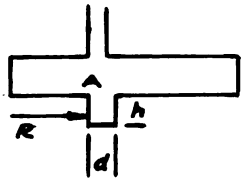

Passive Earth Pressure $= \left(\frac{1+\sin\phi}{1-\sin\phi}\right) wh = 3.5wh$

At A, $wh = 2180$ psf

possible resistance $= 3.5 \times 2180 = 7630$ psf

If S.F. = 2 $R = 2 \times 7800 - .466 \times 21{,}040$

$R = 15{,}600 - 9770$

$R = 5830^{\#}$

$h = \frac{5830}{7630} = .764$

make $\underline{h = 1'\text{-}0''}$

for Shear:

$d = \frac{V}{bjv} = \frac{5830}{12 \times \frac{7}{8} \times 40} = 13.9''$

$d = \sqrt{\frac{6M}{bf}} = \sqrt{\frac{36 \times 5830}{12 \times 60}} = \sqrt{292}$

$d = 17.1''$

make $\underline{d = 18''}$

DESIGN OF STEEL IN VERTICAL SLAB.

DESIGN OF CUT-OFF WALL

Passive Earth Pressure $= \left(\frac{1+\sin\phi}{1-\sin\phi}\right) wh = 3.5wh$

At A, $wh = 2180$ psf

Possible resistance $= 3.5 \times 2180 = 7630$ psf

If S.F. = 2 $P = 2 \times 7800 - .466 \times 21{,}040$

$P = 15{,}600 - 9770$

$P = 5830$#

$h = \frac{5830}{7630} = .764$

make $h = 1'-0"$

for Shear:

$d = \frac{P/V}{} = \frac{5830}{12 \times \frac{3}{8} \times 40} = 13.4"$

$d = \sqrt{\frac{P_t}{bM}} = \sqrt{\frac{36 \times 5830}{12 \times 60}} = \sqrt{242}$

$d = 17.1"$

make $d = 18"$

TOE DESIGN

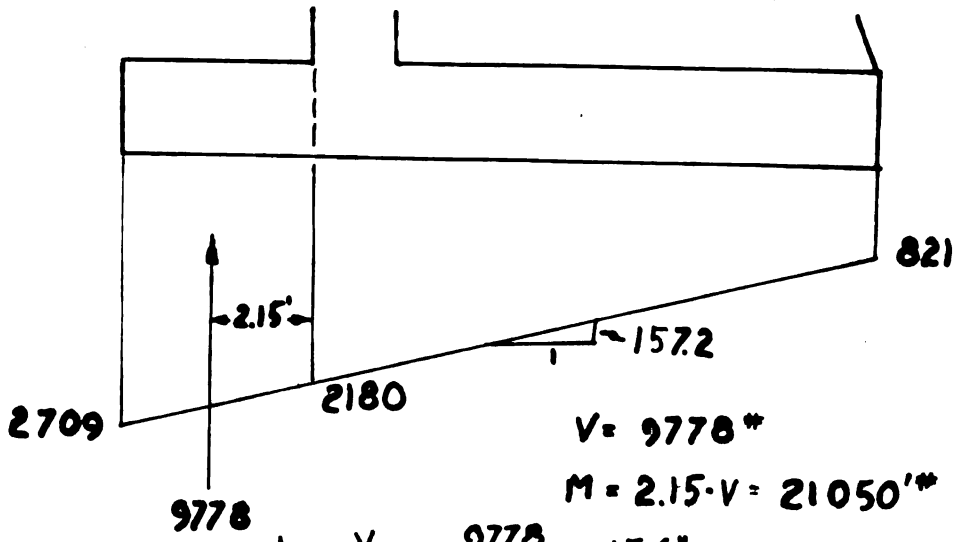

$V = 9778^{\#}$

$M = 2.15 \cdot V = 21050'^{\#}$

$d = \frac{V}{bjd} = \frac{9778}{12 \cdot 7/8 \cdot 60} = 15.6''$

$d = \sqrt{\frac{M}{Rb}} = \sqrt{\frac{21050}{140}} = 12.3''$ $\quad A_s = \frac{M}{f_s jd} = \frac{21050}{18000 \cdot 7/8 \cdot 21} = .0635^{\square''}/'$

Use $1''\phi$ at $12''$ c-c gives $.0655^{\square''}/'$

HEEL DESIGN

Weight of earth + surcharge above 1' section end of heel = $2420^{\#}/'$

$V = \frac{1}{2} wl = \frac{1}{2} \cdot 1520 \cdot 8.5 = 6460^{\#}$

$M = \frac{1}{12} wl^2 = \frac{1}{12} \cdot 1520 \cdot (8.5)^2 = 9150'^{\#}$

$M = \frac{1}{10} wl^2 = \frac{1}{10} 1520 \cdot (8.5)^2 = 11{,}000'^{\#}$

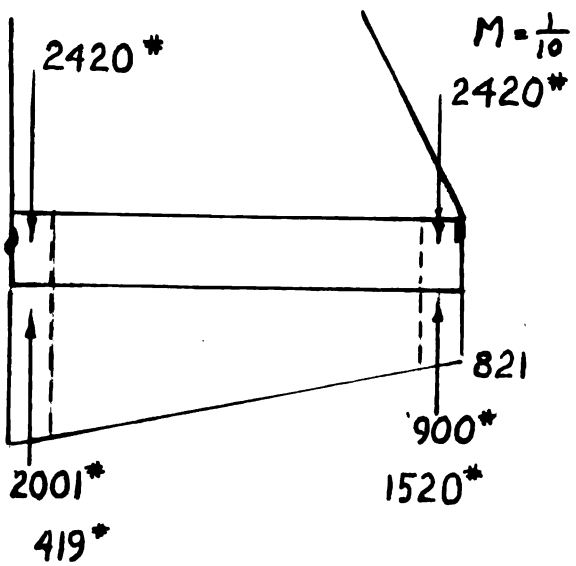

$d = \sqrt{\frac{11000}{140}} = 8.1''$

$d = \frac{V}{bjv} = \frac{6460}{12 \cdot 7/8 \cdot 40} = 15.4''$

Keep heel 24" thick.

$A_s = \frac{9150}{18000 \cdot 7/8 \cdot 21} = .0238^{\square''}/'$ Int.

$A_s = \frac{11000}{18000 \cdot 7/8 \cdot 21} = .0332^{\square''}/'$ Ext.

Counterfort Railroad Wall

TOE DESIGN

$V = 9278^{\#}$

$M = 2.15 \cdot V = 21050'^{\#}$

$d = \frac{V}{bjk} = \frac{9278}{12 \cdot \frac{7}{8} \cdot 60} = 15.6''$

$d = \sqrt{\frac{M}{Rb}} = \sqrt{\frac{21050}{140}} = 12.3''$ $\quad A_s = \frac{M}{f_s jd} = \frac{21050}{18000 \cdot \frac{7}{8} \cdot 21} = .0635\ \square''/'$

Use 1"φ at 12" c-c gives .0655 □"/'

HEEL DESIGN

Weight of earth + surcharge above 1' section end of heel = 2420 #/'

$V = \frac{1}{2} wl = \frac{1}{2} \cdot 1520 \cdot 8.5 = 6460^{\#}$

$M = \frac{1}{12} wl^2 = \frac{1}{12} \cdot 1520 \cdot (8.5)^2 = 9150'^{\#}$

$M = \frac{1}{10} wl^2 = \frac{1}{10} 1520 \cdot (8.5)^2 = 11000'^{\#}$

$d = \sqrt{\frac{11000}{140}} = 8.1''$

$d = \frac{V}{bjv} = \frac{6460}{12 \cdot \frac{7}{8} \cdot 40} = 15.4''$

Keep heel 24" thick.

$A_s = \frac{9150}{18000 \cdot \frac{7}{8} \cdot 21} = .0216\ \square''/'$ Int.

$A_s = \frac{11000}{18000 \cdot \frac{7}{8} \cdot 21} = .0332\ \square''/'$ Ext.

HEEL DESIGN

$M = \frac{1}{12}\, 419 \cdot (8.5)^2 = 2520'^{\#}$ Int. $\quad M = \frac{1}{10} \cdot 419 \cdot (8.5)^2 = 3020'^{\#}$ Ext.

$V = \frac{1}{2} \cdot 915 \cdot 8.5 = 1890^{\#}$

$d = \frac{1890}{12 \cdot \frac{7}{8} \cdot 40} = 4.5''$

$A_s = \frac{2520}{18000 \cdot \frac{7}{8} \cdot 21} = .0076^{\square''}/''$ Int. $\quad A_s = \frac{3020}{18000 \cdot \frac{7}{8} \cdot 21} = .0092^{\square''}/''$ Ext.

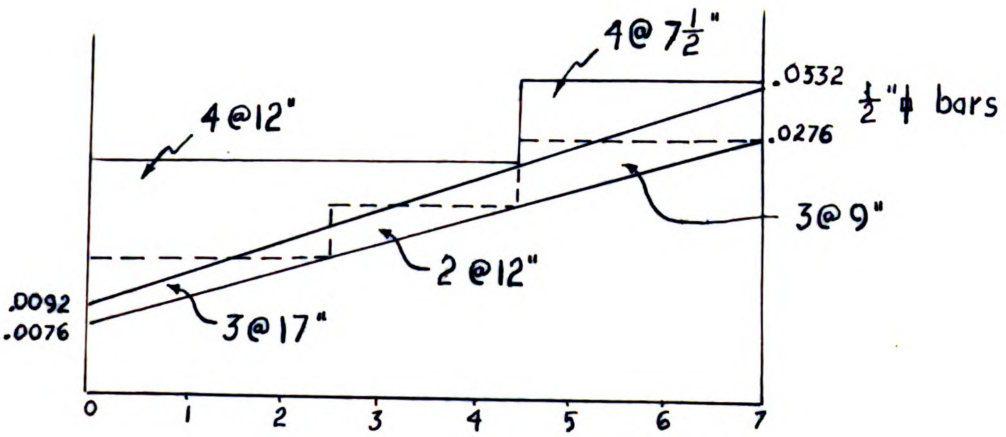

TENSION STEEL

Heel $\quad 6460 \cdot 2 = 12{,}920^{\#}$

$A_s = 12{,}920 \div 18{,}000 = .718^{\square''}/''$

$A_B = \frac{.718 \cdot 9}{2 \cdot 12} = .269^{\square''}/\text{bar}$ $\qquad L = \frac{18000 \cdot .5}{4 \cdot 100 \cdot .8} = 29''$ long

Hook $\frac{5}{8}''\phi$ bar every one

Vertical Slab $\quad 730 \cdot 8.5 = 7060$

$A_s = 7060 \div 18000 = .392^{\square''}/''$

$A_B = \frac{.392 \cdot 8}{2 \cdot 12} = .131$

$L = 18000 \cdot .5 \div 400 = 22.5''$

Hook $\frac{5}{8}''\phi$ bar every other one

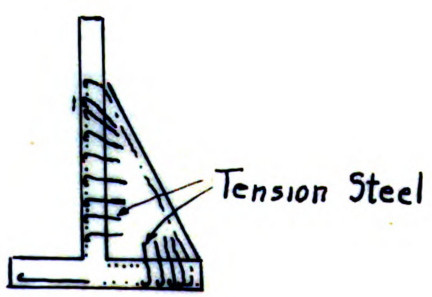

Counterfort Railroad Wall

HEEL DESIGN

$M = \frac{1}{12} \cdot 419 \cdot (8.5)^2 = 2520'^*$ Int. $\quad M = \frac{1}{10} \cdot 419 \cdot (8.5)^2 = 3020'^*$ Ext.

$V = \frac{1}{2} \cdot 919 \cdot 8.5 = 1890^*$

$d = \frac{1890}{12 \cdot \frac{7}{8} \cdot 40} = 4.5''$

$A_s = \frac{2520}{18000 \cdot \frac{7}{8} \cdot 21} = .0076 \square''/'$ Int. $\quad A_s = \frac{3020}{18000 \cdot \frac{7}{8} \cdot 21} = .0092 \square''/'$ Ext.

TENSION STEEL

Heel $6460 \cdot 2 = 12{,}920^*$

$A_s = 12{,}920 \div 18{,}000 = .718 \square''/'$

$A_b = \frac{.718 \cdot 9}{2 \cdot 12} = .269 \square''/\text{bar}$ $\quad L = \frac{18000 \cdot 5}{4 \cdot 100 \cdot 8} = 29''$ long

Hook $\frac{5}{8}$"ϕ bar every one

Vertical Slab $\quad 730 \cdot 8.5 = 7060$

$A_s = 7060 \div 18000 = .392 \square''/'$

$A_b = \frac{.392 \cdot 8}{2 \cdot 12} = .131$

$L = 18000 \cdot .5 \div 400 = 22.5''$

Hook $\frac{5}{8}$"ϕ bar every other one

Counterfort Railroad Wall

COUNTERFORT DESIGN

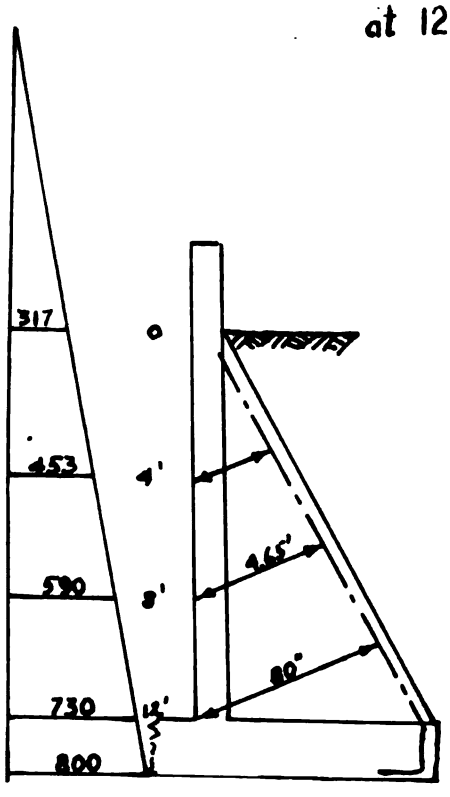

at 12'

$V = \frac{1}{2}(730+317)\cdot 12\cdot 10 = 62{,}800^{\#}$

$M = 62800\cdot 5.2 = 327{,}300'^{\#}$

$A_s = \frac{327300\cdot 12}{18000\cdot \frac{7}{8}\cdot 80} = 3.12^{\square''}$

Use 4 1"ϕ bars

$\mu = \frac{62800}{16\cdot \frac{7}{8}\cdot 80} = 56$ p.s.i.

at 8'

$V = \frac{1}{2}\cdot(590+317)\cdot 8\cdot 10 = 36{,}280^{\#}$

$M = 36280\cdot 3.61 = 131{,}000'^{\#}$

$A_s = \frac{131000}{18000\cdot \frac{7}{8}\cdot 4.65} = 1.79^{\square''}$

at 4'

$V = \frac{1}{2}(453+317)\cdot 4\cdot 10 = 15{,}400^{\#}$

$M = 15{,}400\cdot 1.84 = 28{,}300'^{\#}$

$A_s = \frac{28{,}300}{18000\cdot \frac{7}{8}\cdot 2.6} = .69^{\square''}$

$L = \frac{f_s d}{4\mu} = \frac{18000}{400} = 45''$

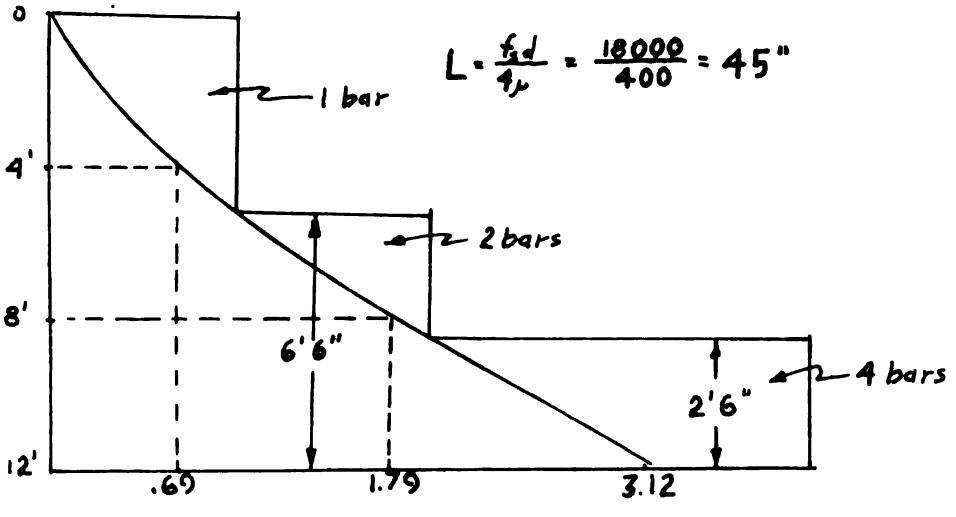

Use 1"ϕ bars cut off as shown.

Counterfort Railroad Wall

COUNTERFORT DESIGN

at 12'

$V = \frac{1}{2}(730+317)\cdot 12\cdot 10 = 62{,}800^{\#}$

$M = 62800\cdot 5.2 = 327{,}300'^{\#}$

$A_s = \frac{327300\cdot 12}{18000\cdot \frac{7}{8}\cdot 80} = 3.12^{\square''}$

Use 4 1"φ bars

$u = \frac{62800}{16\cdot \frac{7}{8}\cdot 80} = 56$ p.s.i.

at 8'

$V = \frac{1}{2}\cdot(590+317)\cdot 8\cdot 10 = 36{,}280^{\#}$

$M = 36280\cdot 3.61 = 131{,}000'^{\#}$

$A_s = \frac{131000}{18000\cdot \frac{7}{8}\cdot 4.65} = 1.79^{\square''}$

at 4'

$V = \frac{1}{2}(453+317)\cdot 4\cdot 10 = 15{,}400^{\#}$

$M = 15{,}400\cdot 1.84 = 28{,}300'^{\#}$

$A_s = \frac{28{,}300}{18000\cdot \frac{7}{8}\cdot 2.6} = .69^{\square''}$

$L = \frac{\phi d}{u} = \frac{18000}{400} = 45''$

Use 1"φ bars cut off as shown.

Counterfort Railroad Wall

DETAILS OF RAILROAD COUNTERFORT WALL INTERIOR PANEL

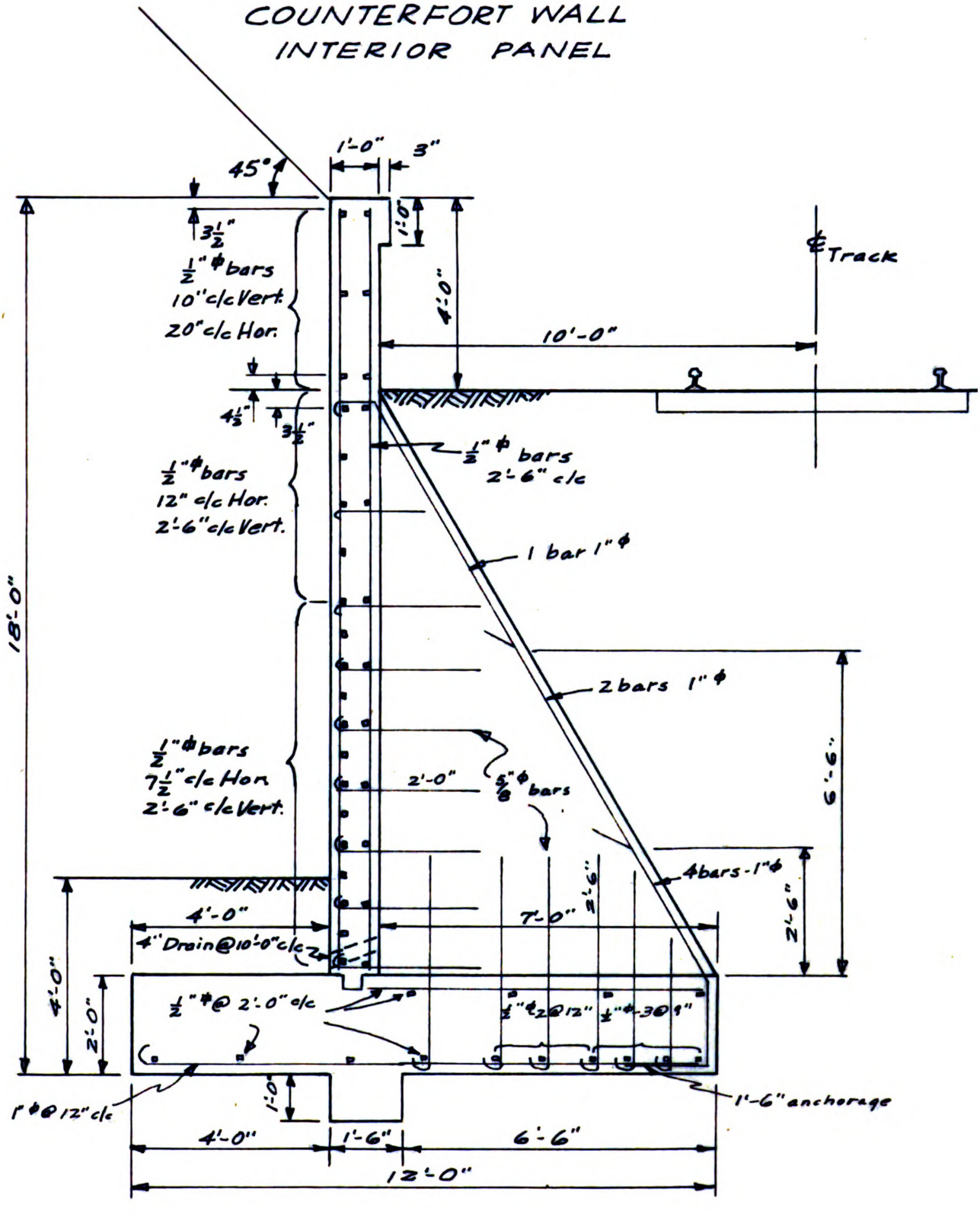

DETAILS OF RAILROAD COUNTERFORT WALL INTERIOR PANEL

DETAILS OF RAILROAD COUNTERFORT WALL EXTERIOR PANEL

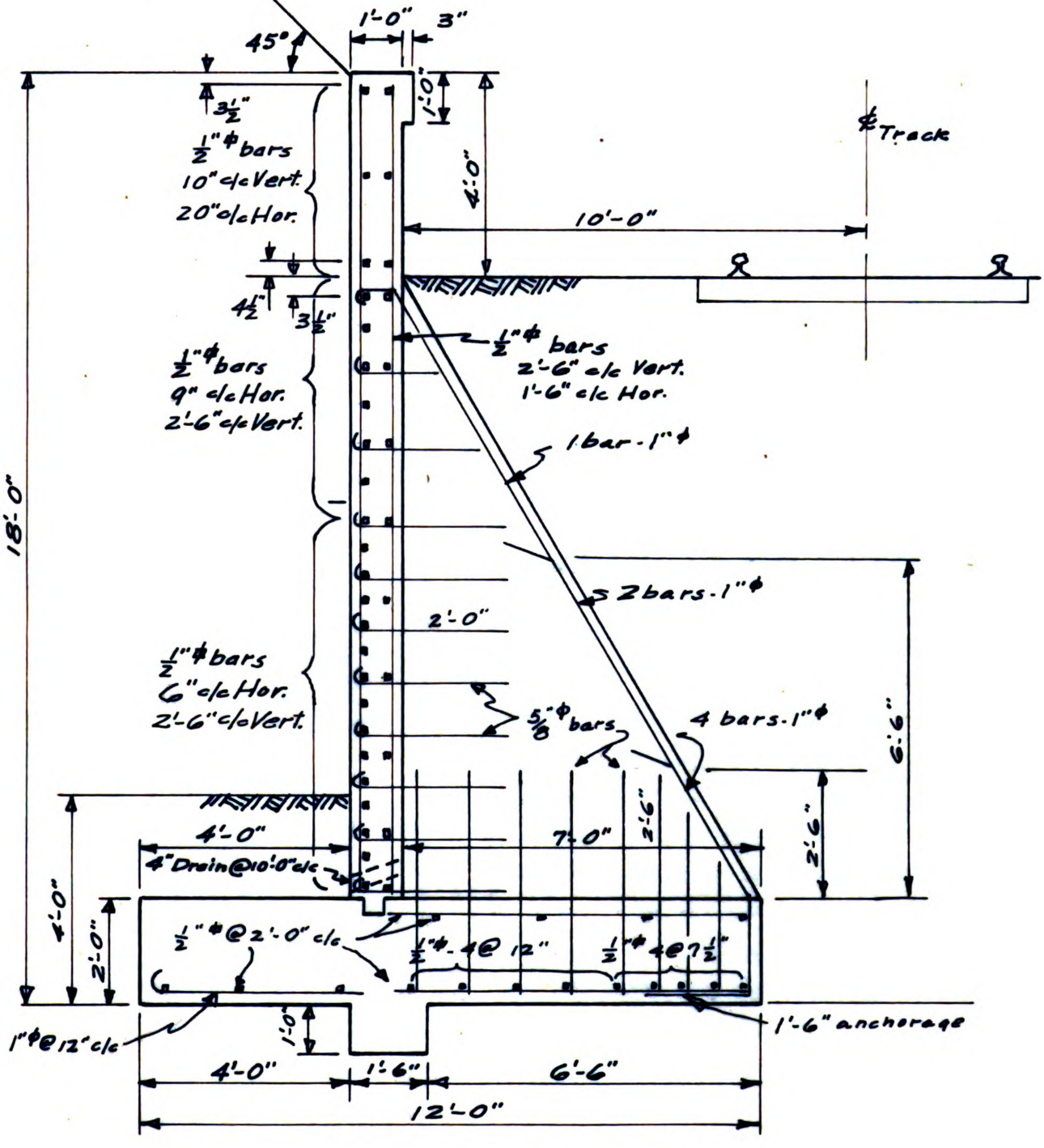

DETAILS OF RAILROAD COUNTERFORT WALL EXTERIOR PANEL

DESIGN OF VERTICAL SLAB

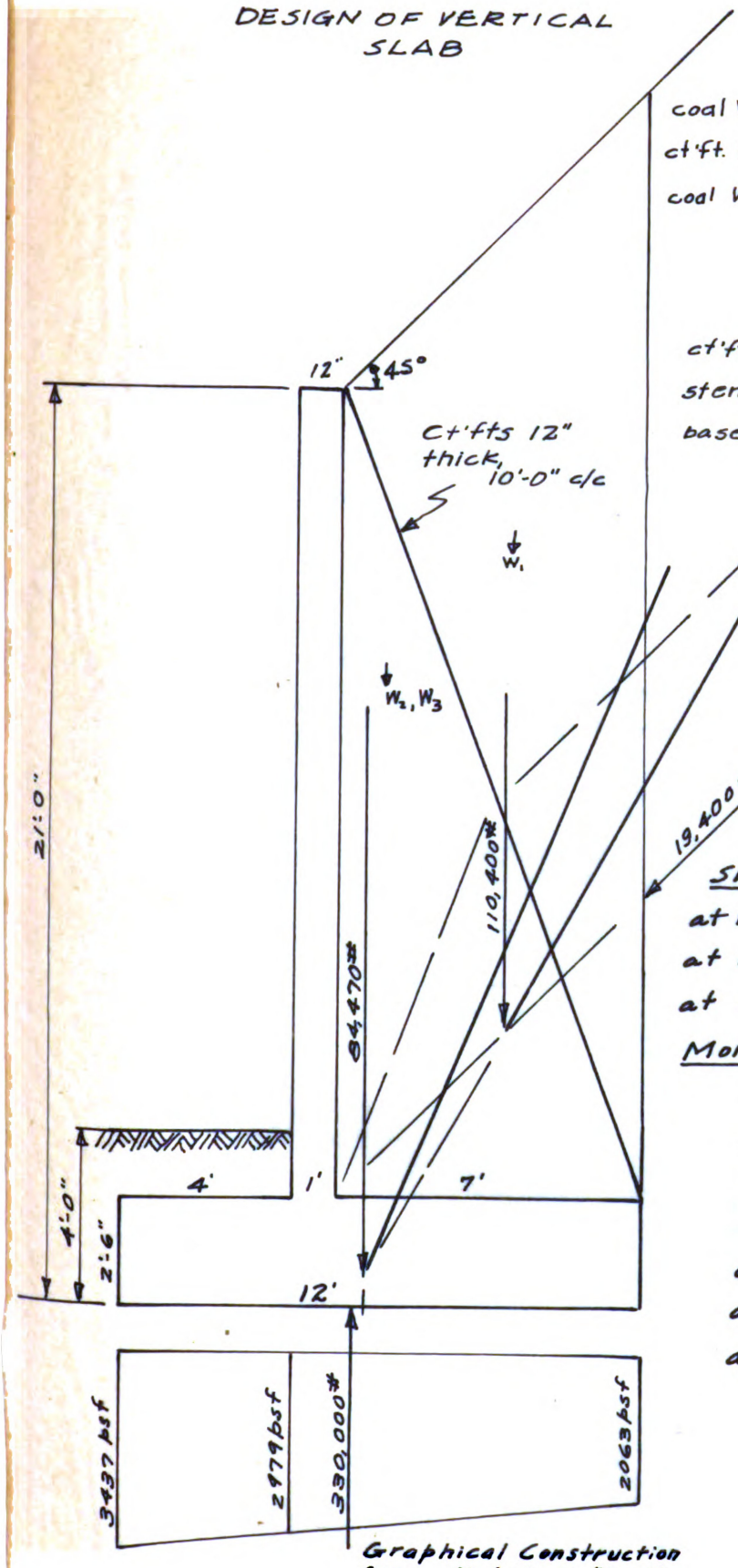

Graphical Construction from Ketchum "Walls Bins & Grain Elevators"

Coal Wt.

coal $W_1 = \frac{28}{2} \times 7 \times 70 \times 10 = 68,600^{\#}$

ct'ft. $W_2 = 18.5 \times \frac{78}{2} \times 150 \times 1 = 9720^{\#}$

coal $W_3 = 18.5 \times \frac{7}{2} \times 70 \times 9 = 41,800^{\#}$

total coal = $110,400^{\#}$ c.g. 8.76' from toe

c.g. of Wall

			arm	Mom.
ct'ft.		$9720^{\#}$	7.33'	$11,200^{\#\prime}$
stem	$18.5 \times 1 \times 150$	= 27,750	4.5'	$125,000^{\#\prime}$
base	$12 \times 2.5 \times 150$	= 45,000	6'	$270,000^{\#\prime}$
		82,470		466,200

5.65' from toe

e (scaled) = 0.4'

Vert. Pressure = 330,000 lb. 5.6' from toe

$p = Cwh$

at 18.5' $p = .707 \times 70 \times 18.5 = 915$ psf

at 12' $p = .707 \times 70 \times 12' = 594$ psf

at 6' $p = .707 \times 70 \times 6 = 297$ psf

Shear: $V = \frac{wl}{2}$

at 18.5' $V = 915 \times 4.5 = 4120$ lbs.

at 12' $V = 594 \times 4.5 = 2670$ lbs.

at 6' $V = 297 \times 4.5 = 1340$ lbs.

Moment: Interior Panel $M = \frac{1}{12} wl^2$

at 18.5' $M = \frac{915 \times 81 \times 12}{12} = 74,100$ lb-in.

at 12' $M = 594 \times 81 = 48,200$ lb-in.

at 6' $M = 297 \times 81 = 24,050$ lb-in.

Exterior Panel $M = \frac{1}{10} wl^2$

at 18.5' $M = 89,000$ lb.-in.

at 12' $M = 57,800$ lb.-in.

at 6' $M = 24,050$ lb.-in.

DESIGN OF VERTICAL SLAB

Coal Wt.

coal $W_1 = \frac{28}{2} \times 7 \times 70 \times 10 = 68,600$#

ct'ft. $W_2 = 18.5 \times \frac{70}{2} \times 150 \times 1 = 9720$#

coal $W_3 = 18.5 \times \frac{7}{2} \times 70 \times 9 = 41,800$#

total coal = 110,400# c.g. 8.76' from toe

C.G. of Wall

		arm	Mom.
ct'ft.	9720#	7.33'	11,200#'
stem 18.5×1×150 =	27,750	4.5'	125,000#'
base 12×2.5×150 =	45,000	6'	270,000#'
	82,470		466,200

5.65' from toe

e(Scaled) = 0.4'

Vert. Pressure = 330,000 lb. 5.6' from toe

p=Cwh

at 18.5' p=.707×70×18.5 = 915 psf

at 12' p=.707×70×12' = 594 psf

at 6' p=.707×70×6 = 297 psf

Shear: $V = \frac{wl}{2}$

at 18.5' V = 915×4.5 = 4120 lbs.

at 12' V = 594×4.5 = 2670 lbs.

at 6' V = 297×4.5 = 1340 lbs.

Moment: Interior Panel $M = \frac{1}{12} wl^2$

at 18.5' $M = \frac{915 \times 81 \times 12}{12} = 74,100$ lb-in.

at 12' M = 594×81 = 48,200 lb-in.

at 6' M = 297×81 = 24,050 lb-in.

Exterior Panel $M = \frac{1}{10} wl^2$

at 18.5' M = 89,000 lb.-in.

at 12' M = 57,800 lb.-in.

at 6' M = 24,050 lb.-in.

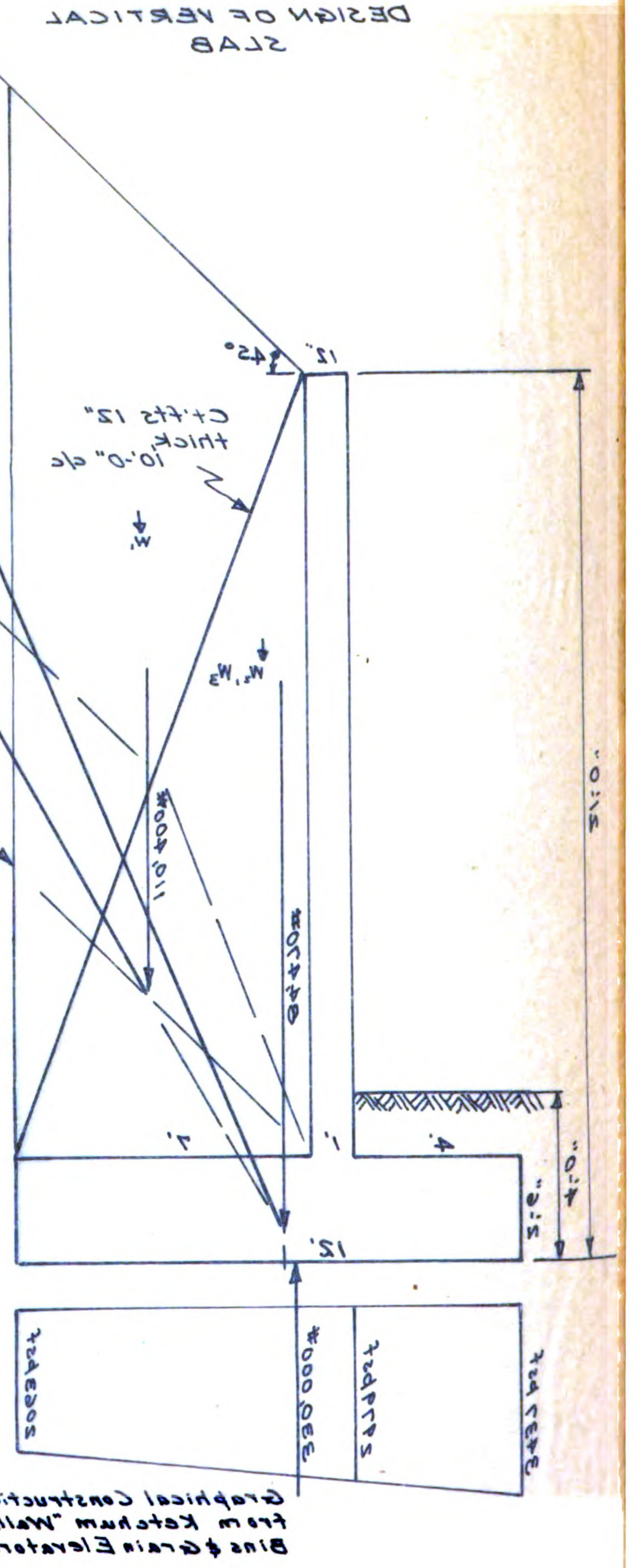

Graphical Construction from Ketchum "Walls Bins & Grain Elevators"

Counterfort Outside Wall.

DESIGN OF VERTICAL SLAB (CONT.)

For Moment: $d=\sqrt{\frac{M}{Rb}}$ Int. Panel, $d=\sqrt{\frac{74,100}{140\times 12}}=6.65''$

Ext. Panel $d=\sqrt{\frac{89,000}{140\times 12}}=7.28''$

For Shear: $d=\frac{V}{bjv}=\frac{4120}{12\times\frac{7}{8}\times 60}=6.54''$ (Spec. Arch. req'd)

Steel Req'd: $A_s=\frac{M}{f_s jd}$

	Int. Panel	Ext. Panel
at 18.5'	$A_s=.0436$ □"/in.	$A_s=.0524$ □"/in.
at 12'	$A_s=.0283$ □"/in.	$A_s=.034$ □"/in.
at 6'	$A_s=.0142$ □"/in.	$A_s=.017$ □"/in.

All $\frac{1}{2}$" # bars.

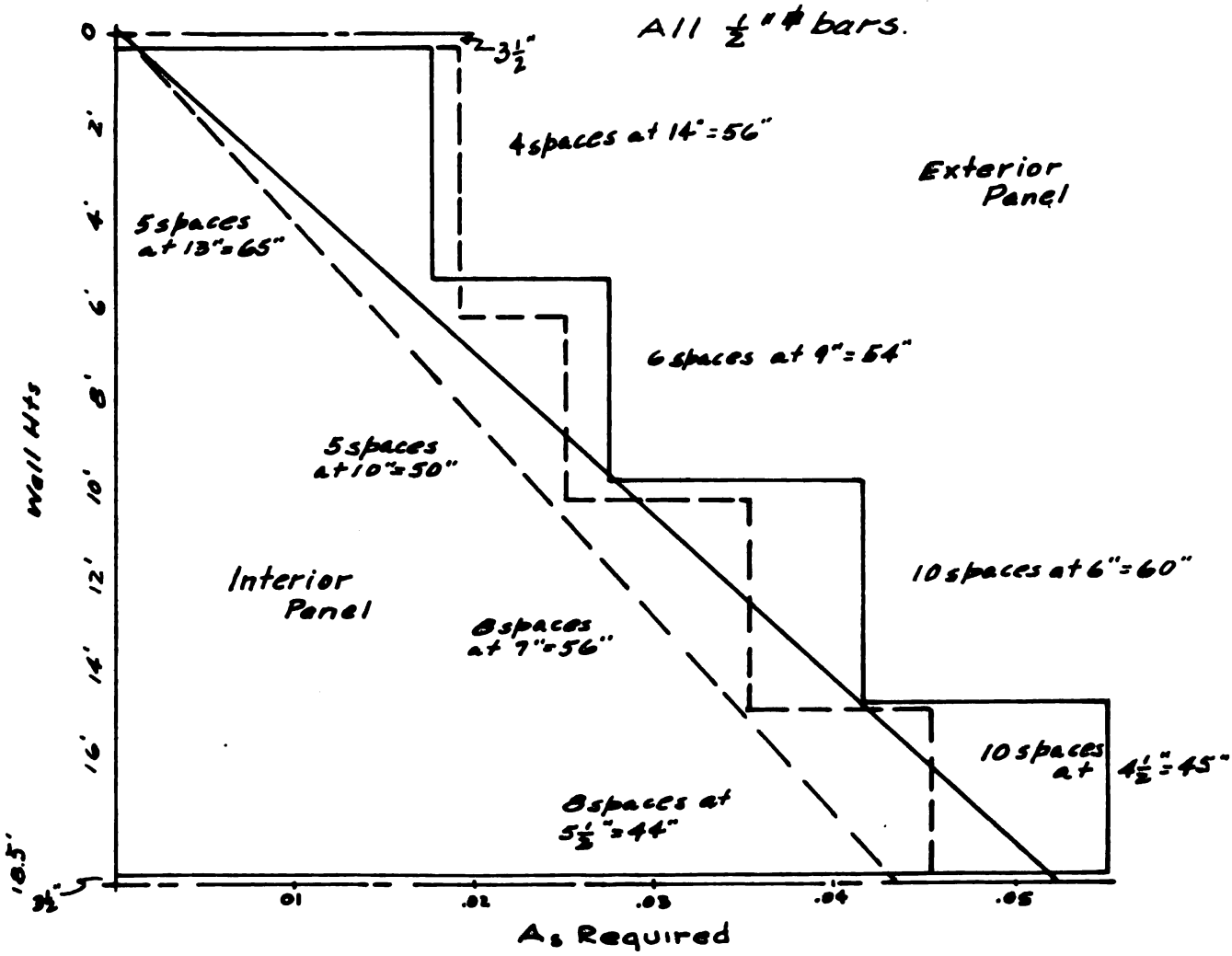

Bond: $u=\frac{V}{\Sigma o jd}=\frac{4120}{8\times\frac{7}{8}\times 9}=65.6$ psi

Counterfort Outside (1)

DESIGN OF VERTICAL SLAB (cont.)

For Moment: $d = \sqrt{\frac{M}{Kb}}$ Int. Panel $d = \sqrt{\frac{74{,}100}{140 \times 12}} = 6.65"$

Ext Panel $d = \sqrt{\frac{89{,}000}{140 \times 12}} = 7.28"$

For Shear: $d = \frac{V}{bjv} = \frac{4120}{12 \times \frac{7}{8} \times 60} = 6.54"$ (Spec. Anch. req'd)

Steel Req'd: $A_s = \frac{M}{f_s j d}$

	Int. Panel	Ext. Panel
at 18.5'	$A_s = .0436$ □"/in.	$A_s = .0524$ □"/in.
at 12'	$A_s = .0283$ □"/in.	$A_s = .034$ □"/in.
at 6'	$A_s = .0142$ □"/in.	$A_s = .017$ □"/in.

All $\frac{1}{2}"$ ϕ bars.

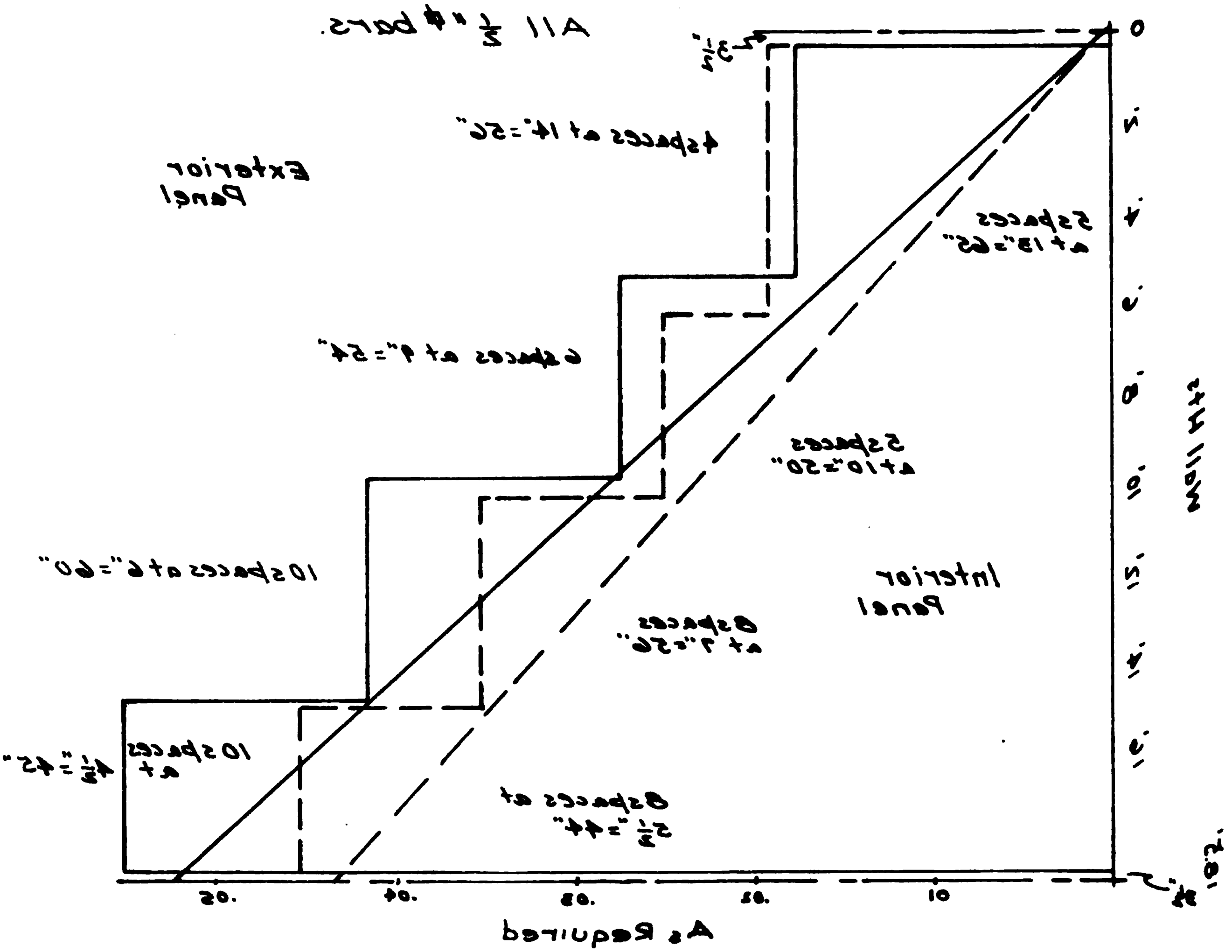

Bond: $u = \frac{V}{\Sigma o j d} = \frac{4120}{8 \times \frac{7}{8} \times 9} = 65.6$ psi

HEEL DESIGN

Sliding: $\frac{330{,}000 \cdot .466}{194{,}000 \cdot .707} = 1.12$ Must Anchor

Overturn: R Strikes within middle 3rd., wall is safe.

Heel design:

Weight of coal above 1' section at end of heel

Coal $25.5 \cdot 70 = 1785^{\#}$

Concrete $= \underline{375^{\#}}$

Total = 2,160 #/' on end of heel (at point of overturn)

$M = \frac{1}{12} w l^2 = \frac{1}{12} \cdot 2160 \cdot (9)^2 = 14{,}550'^{\#}$ Interior Panel

$M = \frac{1}{10} w l^2 = \frac{1}{10} \cdot 2160 \cdot (9)^2 = 17{,}500'^{\#}$ Exterior Panel

$V = \frac{1}{2} w l = \frac{1}{2} \cdot 2160 \cdot 9 = 9{,}700^{\#}$

For M $d = \sqrt{\frac{17500}{140}} = 11.2''$

For Shear $d = \frac{9700}{12 \cdot 7/8 \cdot 40} = 23.1''$ 27" Supplied

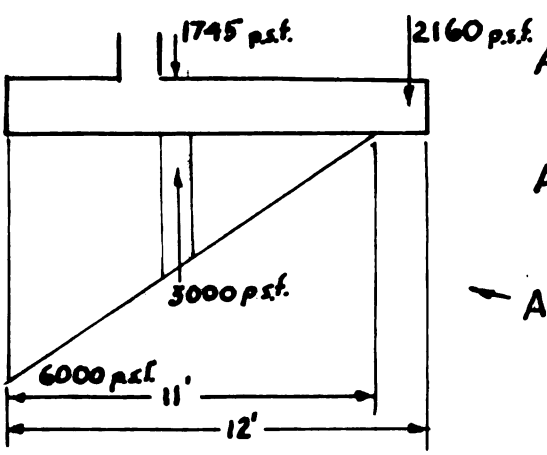

A_s Ext. $= \frac{17500}{18{,}000 \cdot 7/8 \cdot 27} = .0417^{\square''}/''$

A_s Int. $= \frac{14{,}550}{18000 \cdot 7/8 \cdot 27} = .0342^{\square''}/''$

← At point of overturn

Counterfort Outside Wall

HEEL DESIGN

Sliding: $\frac{330,000 \cdot .466}{194,000 \cdot .707} = 1.12$ Must Anchor

Overturn: R Strikes within middle 3rd., wall is safe.

Heel design:

Weight of coal above 1' section at end of heel

Coal $25.5 \cdot 70 = 1785^{\#}$

Concrete $= \underline{375^{\#}}$

Total = 2,160#/' on end of heel (at point of overturn)

$M = \frac{1}{12} w l^2 = \frac{1}{12} \cdot 2160 \cdot (9)^2 = 14,550'^{\#}$ Interior Panel

$M = \frac{1}{10} w l^2 = \frac{1}{10} \cdot 2160 \cdot (9)^2 = 17,500'^{\#}$ Exterior Panel

$V = \frac{1}{2} w l = \frac{1}{2} \cdot 2160 \cdot 9 = 9,700^{\#}$

For M $d = \sqrt{\frac{17500}{140}} = 11.2''$

For Shear $d = \frac{9700}{12 \cdot 7/8 \cdot 40} = 23.1''$ 27" Supplied

A_s Ext. $= \frac{17500}{18000 \cdot 7/8 \cdot 27} = .0417 \square''/'$

A_s Int. $= \frac{14,550}{18000 \cdot 7/8 \cdot 27} = .0342 \square''/'$

At point of overturn

Counterfort Outside Wall

HEEL DESIGN

At base of heel $V = 3000 - 1745 = 1255$ p.s.f. acting up.

$M = \frac{1}{12} \cdot 1255 \cdot (9)^2 = 8500'^{\#}$ Interior Panel

$M = \frac{1}{10} \cdot 1255 \cdot (9)^2 = 10{,}180'^{\#}$ Exterior Panel

$A_s = \frac{8500}{18000 \cdot 7/8 \cdot 27} = .02^{\square''}/''$ Int.

$A_s = \frac{10180}{18000 \cdot 7/8 \cdot 27} = .024^{\square''}/''$ Ext.

Heel Steel:

Use $\frac{1}{2}''\phi$ bars.

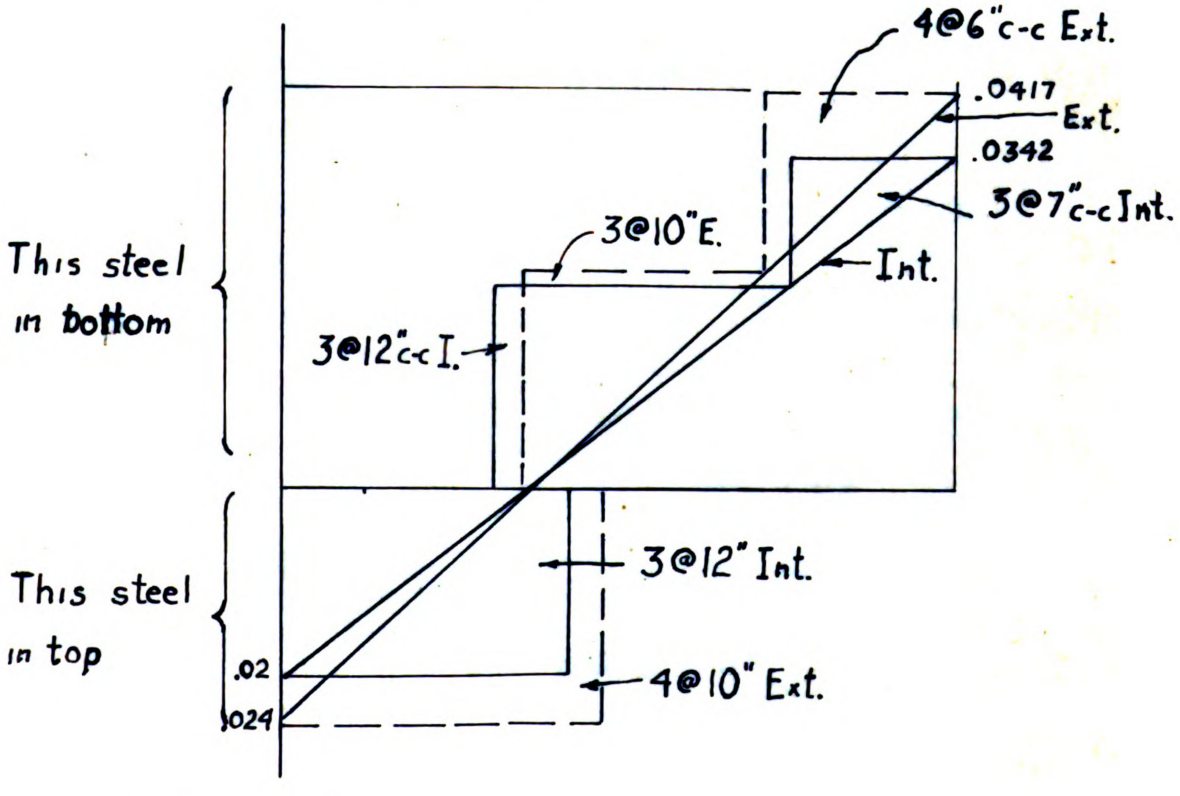

$\mu = \frac{9700}{4 \cdot 7/8 \cdot 27} = 102$ p.s.i.

Counterfort Outside Wall

HEEL DESIGN

At base of heel $V = 3000 - 1745 = 1255$ p.s.f. acting up.

$M = \frac{1}{12} \cdot 1255 \cdot (9)^2 = 8500'^{\#}$ Interior Panel

$M = \frac{1}{10} \cdot 1255 \cdot (9)^2 = 10{,}180'^{\#}$ Exterior Panel

$A_s = \frac{8500}{18000 \cdot 7/8 \cdot 27} = .02\,\square''/'$ Int.

$A_s = \frac{10180}{18000 \cdot 7/8 \cdot 27} = .024\,\square''/'$ Ext.

Heel Steel:

Use $\frac{1}{2}$" ϕ bars.

$\mu = \frac{9200}{4 \cdot 7/8 \cdot 27} = 102$ p.s.i.

Counterfort Outside Wall

DESIGN OF TOE

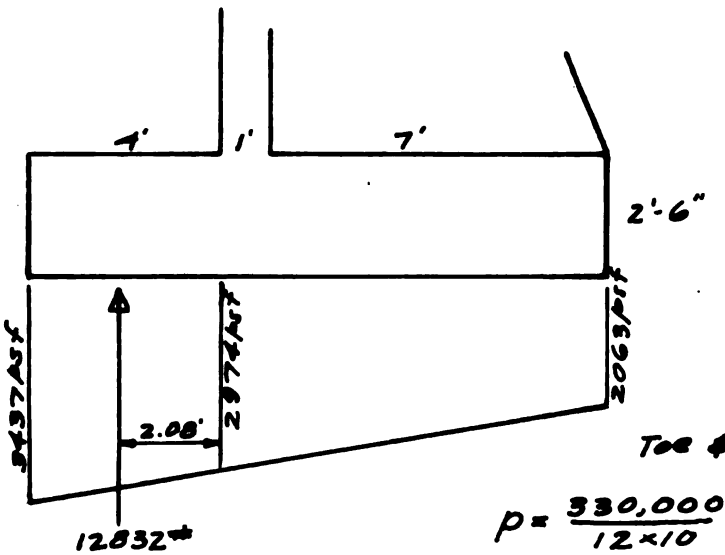

Toe & Heel Pressures

$$p = \frac{330{,}000}{12 \times 10} \pm \frac{6 \times 330{,}000 \times .5}{1440}$$

$p = 2750 \pm 687$

$p_t = 3437$ psf.

$p_h = 2063$ psf

Shear & Moment

$$V = \frac{3437 + 2974}{2} \times 4$$

$V = 12{,}832$ lbs.

$M = 12{,}832 \times 2.08$

$M = 26{,}700$ lb.-ft.

For Shear:

$$d = \frac{V}{bjr} = \frac{12{,}832}{12 \times \frac{7}{8} \times 60}$$

$d = 20.4''$ (Spec. Anch.)

For Moment:

$$d = \sqrt{\frac{M}{Rb}} = \sqrt{\frac{26{,}700}{140 \times 1}}$$

$d = 13.8''$

$$A_s = \frac{M}{f_s jd} = \frac{26{,}700}{18{,}000 \times \frac{7}{8} \times 27} = .0628 \square''/in$$

Use $\frac{3}{4}$" ϕ at 9" c-c.
Bottom

Counterfort Outside Wall.

DESIGN OF TOE

Toe & Heel Pressures

$$p = \frac{330{,}000}{12 \times 10} \pm \frac{6 \times 330{,}000 \times .5}{144^{\square}}$$

$$p = 2750 \pm 687$$

$$p_t = 3437 \text{ psf}$$

$$p_h = 2063 \text{ psf}$$

Shear & Moment

$$V = \frac{3437 + 2274}{2} \times 4$$

$$V = 12{,}832 \text{ lbs.}$$

$$M = 12{,}832 \times 2.08$$

$$M = 26{,}700 \text{ lb.-ft.}$$

For Shear:

$$d = \frac{V}{bjv} = \frac{12{,}832}{12 \times \frac{7}{8} \times 60}$$

$$d = 20.4'' \quad \text{(Spec. Anch.)}$$

For Moment:

$$d = \sqrt{\frac{M}{Rb}} = \sqrt{\frac{26{,}700}{140 \times 1}}$$

$$d = 13.8''$$

$$A_s = \frac{M}{f_s jd} = \frac{18{,}000 \times \frac{7}{8} \times 27}{} = .0628 \text{ □''/in}$$

Use $\frac{3}{4}$" ϕ at 9" c.c.
Bottom

Counterfort Outside Wall.

COUNTERFORT DESIGN

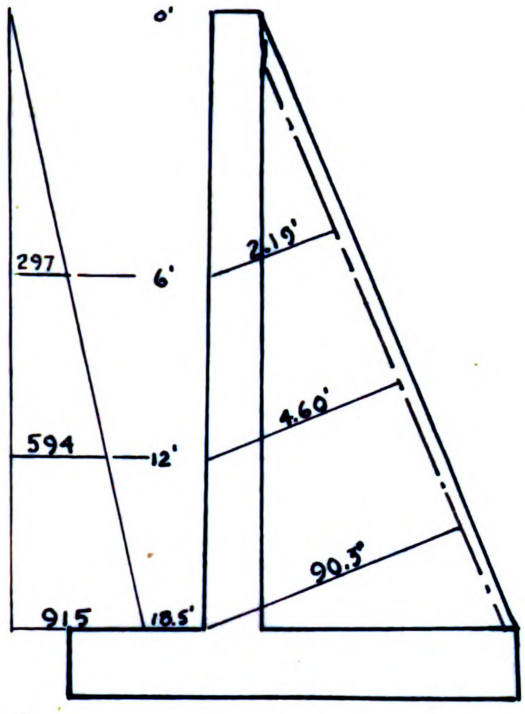

At 18.5'

$$V = \frac{915 \cdot 10 \cdot 18.5}{2} = 84{,}600^{\#}$$

$$M = 84600 \cdot \frac{18.5}{3} = 520{,}000'^{\#}$$

$$A_s = \frac{M}{f_s j d} = \frac{520{,}000 \cdot 12}{18000 \cdot 7/8 \cdot 90.3} = 4.39^{\square''}$$

6 - 1" ϕ bars gives $4.71^{\square''}$

At 12'

$$V = \frac{594 \cdot 10 \cdot 12}{2} = 35{,}600^{\#}$$

$$M = 35600 \cdot 4 = 142{,}000'^{\#}$$

$$A_s = \frac{142000}{18000 \cdot 7/8 \cdot 4.6} = 1.97^{\square''}$$

At 6'

$$V = \frac{297 \cdot 10 \cdot 6}{2} = 8900^{\#}$$

$$M = 8900 \cdot 2 = 17{,}800'^{\#}$$

$$A_s = \frac{17800}{18000 \cdot 7/8 \cdot 2.19} = .52^{\square''}$$

Use 6 - 1" ϕ bars cut off as shown below.

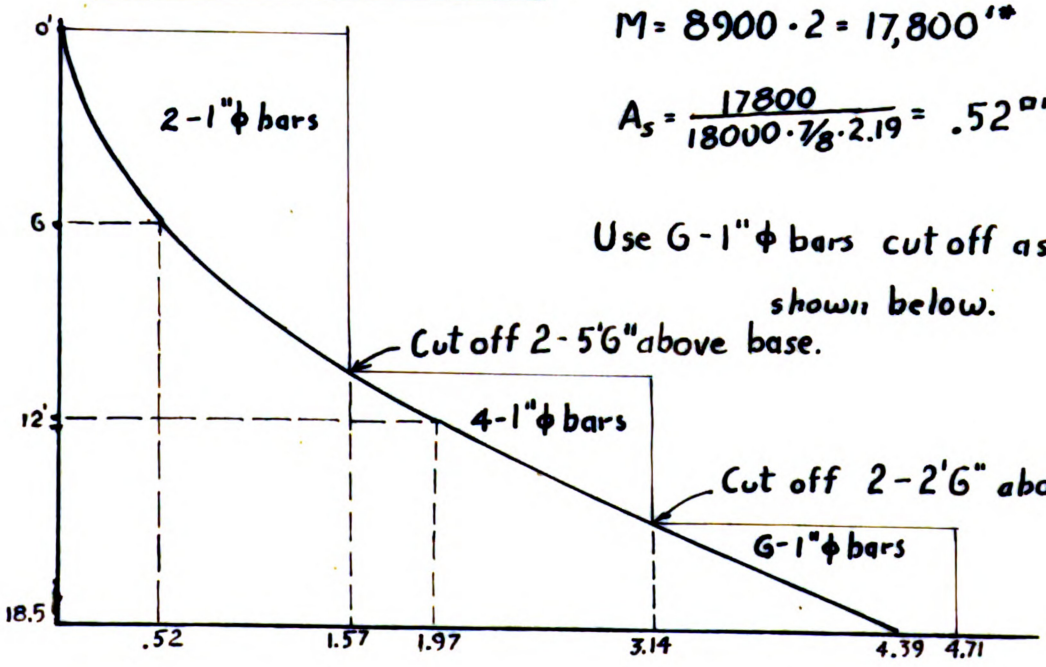

Counterfort Outside Wall

COUNTERFORT DESIGN

At 18.5'

$V = \frac{915 \cdot 10 \cdot 18.5}{2} = 84{,}600^{\#}$

$M = 84600 \cdot \frac{18.5}{3} = 520{,}000'^{\#}$

$A_s = \frac{M}{f_s j d} = \frac{520{,}000 \cdot 12}{18000 \cdot \frac{7}{8} \cdot 90.3} = 4.39^{\square''}$

6 - 1"ϕ bars gives $4.71^{\square''}$

At 12'

$V = \frac{594 \cdot 10 \cdot 12}{2} = 35{,}600^{\#}$

$M = 35600 \cdot 4 = 142{,}000'^{\#}$

$A_s = \frac{142000}{18000 \cdot \frac{7}{8} \cdot 4.6} = 1.97^{\square''}$

At 6'

$V = \frac{297 \cdot 10 \cdot 6}{2} = 8900^{\#}$

$M = 8900 \cdot 2 = 17{,}800'^{\#}$

$A_s = \frac{17800}{18000 \cdot \frac{7}{8} \cdot 2.19} = .52^{\square''}$

Use 6 - 1"ϕ bars cut off as shown below.

Counterfort Outside Wall

CUT OFF WALL

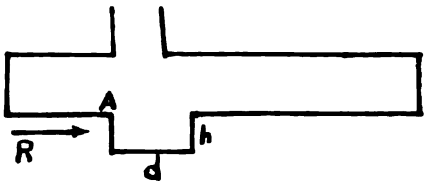

Passive earth pressure = 3.5 wh

At "A" wh = 2950

Possible resistance = 3.5·2950 = 10,300 psf.

If S.F. = 2

$R = 2 \cdot 19400 \cdot .707 - .466 \cdot 33000$

$R = 12{,}000$

$h = \frac{12000}{10300} = 1.17'$ Say 1'3" = h

$V = 12{,}000^{\#}$ $M = 12000 \cdot 7.5 = 90{,}000^{\#''}$

$d = \frac{12000}{12 \cdot 7/8 \cdot 40} = 28.6''$ $d = \sqrt{\frac{6 \cdot 90000}{12 \cdot 60}} = 27.4''$

Make d = 30"

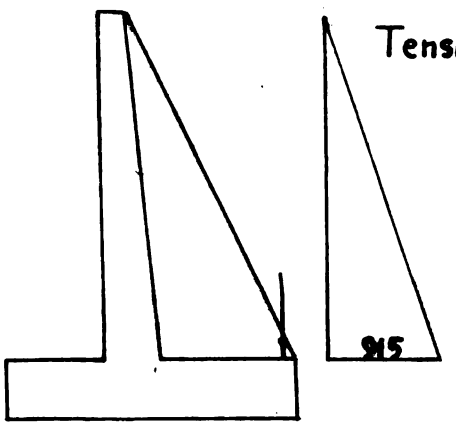

Tension Steel:

Vertical Slab

$P = 915 \cdot 9 = 8220^{\#}$

$A_s = \frac{8220}{18000} = .456^{\square''}/\text{ft.}$ (bottom strip)

$A_B = \frac{.456 \cdot 5}{12 \cdot 2} = .095^{\square''}/\text{bar}$

Use $\frac{1}{2}''\phi = .20^{\square''}$ hook on every other bar.

$L = \frac{f_s d}{4\mu} = \frac{18000 \cdot \frac{1}{2}}{4 \cdot 100} = 22.5''$

Heel Slab

$P = 9700 \cdot 2 = 19{,}400^{\#}$ $A_s = \frac{19400}{18{,}000} = 1.18^{\square''}/\text{ft.}$

$A_B = \frac{1.18 \cdot 6}{12 \cdot 2} = .27^{\square''}/\text{bar}$ $L = \frac{f_s d}{4\mu} = 29''$

Use $\frac{5}{8}''\phi$ hook on every bar

Counterfort Outside Wall

CUT OFF WALL

Passive earth pressure = 3.5 wh

At "A" wh = 2950

Possible resistance = 3.5·2950 = 10,300 psf

If S.F. = 2

$R = 2 \cdot 19400 \cdot .707 - .466 \cdot 33000$

$R = 12{,}000$

$h = \frac{12000}{10300} = 1.17'$ Say 1'3" = h

$V = 12{,}000^{\#}$ $M = 12000 \cdot 7.5 = 90{,}000^{\#''}$

$d = \frac{12000}{12 \cdot \frac{7}{8} \cdot 40} = 28.6''$ $d = \sqrt{\frac{6 \cdot 90000}{12 \cdot 60}} = 27.4''$

Make d = 30"

Tension Steel:

Vertical Slab

$P = 915 \cdot 9 = 8220^{\#}$

$A_s = \frac{8220}{18000} = .456 \square''/ft.$ (bottom strip)

$A_s = \frac{.456 \cdot 5}{12 \cdot 2} = .095 \square''/bar$

Use $\frac{1}{2}''\phi = .20\square''$ hook on every other bar.

$L = \frac{f_s d}{4\mu} = \frac{18000 \cdot \frac{1}{4}}{4 \cdot 100} = 22.5''$

Heel Slab

$P = 9700 \cdot 2 = 19{,}400^{\#}$ $A_s = \frac{19400}{18{,}000} = 1.18 \square''/ft.$

$A_s = \frac{1.18 \cdot 6}{12 \cdot 2} = .27 \square''/bar$ $L = \frac{f_s d}{4\mu} = 29''$

Use $\frac{5}{8}''\phi$ hook on every bar

Counterfort Outside Wall

DETAILS OF COUNTERFORT
OUTSIDE WALL - INTERIOR PANEL

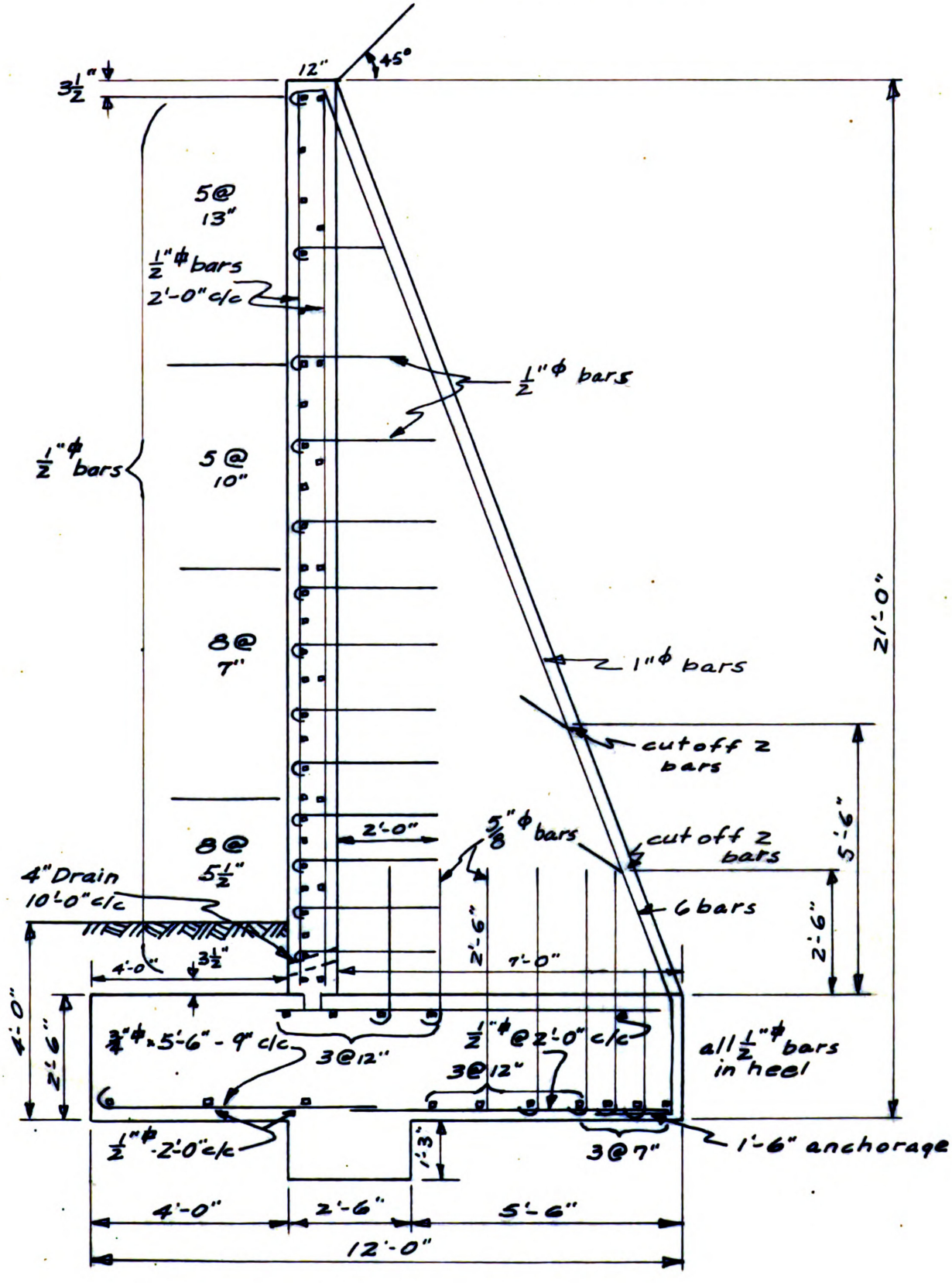

DETAILS OF COUNTERFORT
OUTSIDE WALL - INTERIOR PANEL

DETAILS OF COUNTERFORT
OUTSIDE WALL - EXTERIOR PANEL

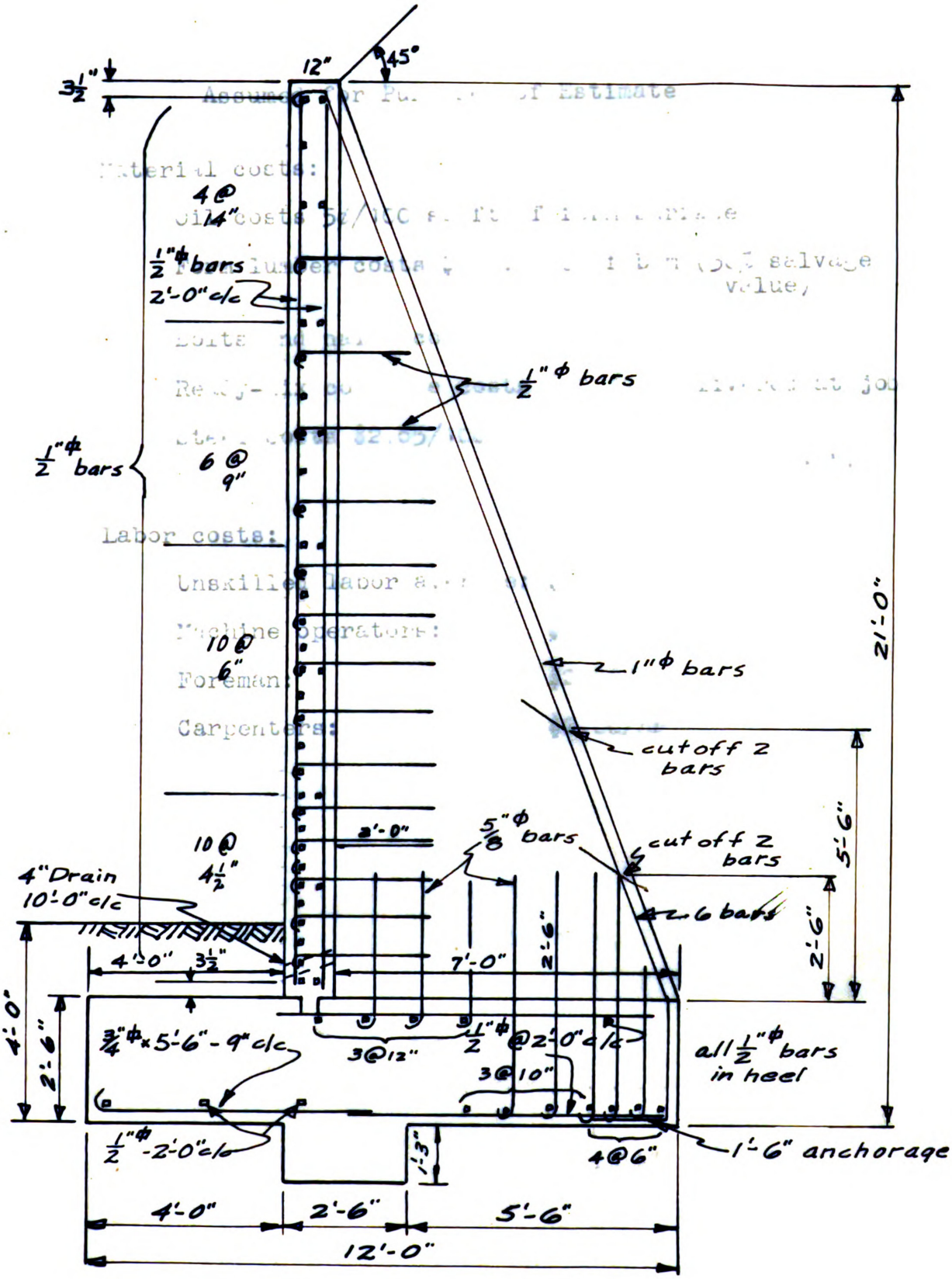

DETAILS OF COUNTERFORT OUTSIDE WALL - EXTERIOR PANEL

Assumed for Purposes of Estimate

Material costs:

Oil costs 5¢/100 sq ft of form surface

Form lumber costs $100./1000 f b m (50% salvage value)

Bolts and nails cost 6¢/lb

Ready-mix concrete costs $10./yd delivered at job

Steel costs $2.65/100 lb (incl.chairs,spacers and ties)

Labor costs:

Unskilled labor average:	$1.20/hr
Machine operators:	$1.50/hr
Foreman:	$2.00/hr
Carpenters:	$2.00/hr

Cost Estimate for Cantilever Wall

1. Materials:

(a).Forms

R.R.Wall 16x110x2 or 3520 sq ft of wall

35.3x250 fbm/100 sq ft or 8820 fbm reqd.

35.3x8 lbs/100 sq ft or 282 lbs nails reqd.

Lumber @ $50./1000, 8.82x50 or $441.00

Bolts @ 6¢/lb 282x.06 or $ 16.80

Oil @ 5¢/100 35.3x.05 or $ 1.80

$459.60

Outside Wall 18.5x2x220 or 8140 sq ft of forms

81.4x250 or 20350 fbm reqd.

81.4x8 or 650 lbs reqd.

Lumber @ $50./1000, 20.35x50 or $1017.50

Nails @ 6¢/lb 650x.06 or $ 39.00

Oil @ 5¢/100 81.4x.05 or $ 4.07

$1060.57

Total for forms $1520.17

(b) Concrete

192 yds in R.R.Wall

510 yds in Outside Wall

702 yds total (387 in base, 315 in stem)

$10.00x702 or $7020.00

(c) Steel in 10' of wall

1" rd bars (2.67 lb/ft)

3.75 bars, 18.5' long or 69.4'

7.5 bars, 9.0' long or 67.5'

12.5 bars, 7.0' long or 87.5'

224.4'x2.67 or 598 lbs

1/2" sq bars (.85 lb/ft)

4 bars, 18.5' long or 74.0'

36 bars, 10.0' long or 360.0'

434.0'x .85 or 369 lbs

3/4" sq bars (1.91 lb/ft)

200.0'x1.91 or 382 lbs.

1349 lbs/10'

1349x33 or 44500 lb total

Total for Steel - 445x$2.65 or $1180.00

Total Material Costs $9720.17

2. Labor

(a) Excavation

1 Foreman @ $2.00/hr.x64 hrs	$128.00
2 Trimmers @ $1.00/hr.x16x2	$ 32.00
1 Cat.Oper.@$1.50/hr.x64 hrs	$ 96.00
1 B'hoe.Op.@ 1.50/hr.x16 hrs	$ 24.00
	$280.00

(b) Forms

11670 sq ft of form surface

15 labor hrs/100 sq ft

Unit cost 30¢/sq ft

Total for forms 11670x.30 or $3501.00

(c) Concrete

Base: 387 yds @ 1hr/12 yds or 32 hrs

7 men x 32hrs x $1.20 or $269.00

Stem: 315 yds @ 1hr/2 yds or 158 man hrs

7 men take 4 days to place

7 x 8 x 4 x $1.20 or $269.00

Total for concrete $538.00

(d) Steel

25 hooks/10' 33x25 or 825 hooks

9 bends/10' 33x 9 or 297 bends

Bending: 2 hrs/100 bends x 297 or 7 hrs

Hooking: 3 hrs/100 hooks x 825 or 25 hrs

Placing:

1/2" bars 25x33 or 826 under 10'

@ 5 hr/100 or 42 hrs

45x33 or 1850 under 20'

@ 6 hr/100 or 90 hrs

1" bars 3.75x33 or 124 under 20'

@ 8.5 hr/100 or 11 hrs

18.5x33 or 610 under 10'

@ 6.5 hr/100 or 40 hrs

215 hrs

Total for steel 215x$1.20

$258.40

Total Labor Costs $4577.40

3. Plant

(a) Excavation

Remove 130' R.R.Track @ $1.50/lin.ft. $195.00

Reinstall 130' R.R.Track @ $3.00/lin ft $390.00

Strip off 1' over bin floor

55x110/27 or 224 yds

Excavate along R.R.

15x12x130/27 or 6650 yds

6874 yds

Use 2 Bulldozers @ 600 yds/day

$\frac{6874}{1200}$ or 8 days

$37.00/day x 2 x 8 or $512.00

Dig for base

306x4x12/27 or 545 yds

Backhoe @ 400 yds/day

$\frac{545}{400}$ or 2 days x $37.00 or $ 74.00

Total for excavation $1171.00

(b) Forms

1 power saw and hand tools-say $ 20.00

(c) Concrete

5 buggies @ 20¢ ea./dayx 4 days or $4.00

1 Vibrator @ 60¢/day x 8 days or $4.80

Misc. small tools $10.00

$ 18.80

(d) Steel

Bending and Cutting machines

@ $1.00/day x 4 days or $ 4.00

Total Plant Costs $1213.80

Total cost of Materials, Labor and Plant	$15511.37
4. Overhead	
15% of total cost	$ 2326.73
	$17838.10
5. Profit	
8% of total (incl. overhead)	$ 1427.05
GRAND TOTAL	$19265.15

Cost Estimate for Counterfort wall

1. Materials

(a) Forms

Outside Wall

20 ct'fts x 7 x 18.5 or 2590 sq ft

26x250 fbm/100 sq ft or 6500 fbm

Nails etc. 26x8 or 208 lbs

Lumber @ $50./1000, 6.5x50 or $325.00

Nails @ 6¢/lb, 208x.06 or $ 12.48

Oil @ 5¢/100, 26x.05 or $ 1.30

(ct'fts alone) $338.78

Wall $1060.57

$1399.27

R.R.Wall

10 ct'fts x 7 x 12 or 840 sq ft

8.4x250 fbm/100 sq ft or 2100 fbm

Nails etc. 8.4x8 or 67 lbs

Lumber @ $50 /1000, 2.1x50 or $105.00

Nails @ 6¢/lb, 67x.06 or $ 4.06

Oil @ 5¢/100, 8.4x.05 or $ .42

(ct'fts alone) $109.48

Wall $459.60

$569.08

Total for forms $1968.35

(b) Concrete

192 yds in R.R.Wall

465 yds in Outside wall and ct'fts

657 yds @ $10./yd or $6570.00

(c) Steel

1" rd bars

2 bars, 26.5' long or 53'

10.5 bars, 2' long or 21'

7.5 bars, 2' long or 15'

89'x2.67 or 238 lbs

1/2" sq bars

39 bars, 10' long or 390'

13 bars, 5' long or 65'

29.5 bars, 10' long or 295'

750'x .85 or 638 lbs

3/4" sq bars

13 bars, 5.5' long or 73.3'

73.3'x1.91 or 140 lbs

1/2 rd bars

24 bars 2.5' long or 60'

24 bars 5.0' long or 120'

180'x.67 or 121 lbs

1137 lbs/10'

1137x33 or 37500 lbs

Total for Steel - 375x2.65 or 994.00

Total Material Costs $9512.35

2. Labor

(a) Excavation

Same as for Cantilever $ 280.00

(b) Forms

15070 sq ft of form surface

15 labor hrs/100 sq ft or 30¢/sq ft

Total for Forms 15070x.30 or $4521.00

(c) Concrete

Base: 406 yds @ 1hr/12 yds or 36 hrs

7 men * 36 hrs x $1.20 or $320.00

Stem: 251 yds @ 1hr/2 yds or 125 man hrs

7 men take 3 days to place

7 x 8 x 3 x $1.20 or $202.00

Total for concrete $522.00

(d) Steel

47 hooks/ct'ft x 30 or 1410 1/2" rd hooks

13.5 x 33 or 445 3/4" sq hooks

2.25hrs/100 x 445 or 10 hrs

2 hrs/100 x 1410 or 29 hrs

11 x 30 or 340 bends

2 hrs/100 x 340 or 7 hrs

Placing Bars

10 hrs/100 x 30 or 3 hrs

8 hrs/100 x 120 or 10 hrs.

6.5 hrs/100 x 120 or 8 hrs

6 hrs/100 x 3175 or 185 hrs

4 hrs/100 x 432 or 17 hrs

269 hrs

Total for Steel 269 x $1.20 or $322.80

Total Labor Costs $5645.80

3. Plant

(a) Excavation

Same as Cantilever $1171.00

(b) Forms

Same as Cantilever $ 20.00

(c) Concrete

5 buggies @ $1./day

3 x $1.00 or $3.00

1 Vibrator @ 60¢/day

7 x .60 or $4.20

Misc. tools $10.00

$ 17.20

(d) Steel

Bending and cutting machines

@ $1.00/day x 6 days or $ 6.00

Total Plant Costs $1214.20

Total cost of Materials, Labor and Plant $16372.35

4. Overhead

15% of total cost $ 2455.85

$18828.20

5. Profit

8% of total (incl. overhead) $ 1506.25

GRAND TOTAL $20334.45

SUMMARY OF COST ESTIMATES

	Cantilever		Counterfort	
Materials				
Forms	$1520.17		$1968.35	
Concrete	$7020.00		$6570.00	
Steel	$1180.00	$9720.17	$ 974.00	$9512.35
Labor				
Excavation	$ 280.00		$ 280.00	
Forms	$3501.00		$4521.00	
Concrete	$ 538.00		$ 522.00	
Steel	$ 258.40	$4577.40	$322.80	$5645.80
Plant				
Excavation	$1171.00		$1171.00	
Forms	$ 20.00		$ 20.00	
Concrete	$ 18.80		$ 17.20	
Steel	$ 4.00	$1213.80	$ 6.00	$1214.20
		$15511.37		$16372.35
Overhead				
15%		$ 2326.73		$ 2455.85
Profit				
8%		$ 1427.05		$ 1506.25
GRAND TOTAL		$19265.15		$20334.45