THYROID FUNCTION IN THE NEONATAL RAT WITH NOTES ON HEART-RATE TEMPERATURE RELATIONSHIPS

Thesis for the Degree of Ph. D.
MICHIGAN STATE UNIVERSITY
Alex D. Beltz
1966

THESIS

LIBRARY
Michigan State
University

This is to certify that the

thesis entitled

Thyroid function in the neonatal rat
with notes on heart-rate
temperature relationships

presented by

Alex D. Beltz

has been accepted towards fulfillment
of the requirements for

Ph.D. degree in Physiology

E. P. Reineke
Major professor

Date 5/20/66

O-169

ABSTRACT

THYROID FUNCTION IN THE NEONATAL RAT WITH NOTES ON HEART-RATE TEMPERATURE RELATIONSHIPS

by Alex D. Beltz

Experiments to determine thyroid function were conducted with neonatal rats ranging in age from birth to twenty-days of age. The direct output method was used for the estimation of thyroid secretion rate (TSR). This method involved output slope determinations, per cent dose uptake, and direct measurement of thyroid iodine. The rats were labeled with I^{131} in two ways: (1) Intraperitoneal injection of 15 microcuries into pregnant rats near term, and (2) Single direct, subcutaneous injections of one microcurie per infant.

It was found that the rat thyroid glands are functional at birth, but at a low level which persists until the infant weighs about 20 grams. At this time, the TSR and the thyroid iodine content abruptly increase as a straight-line function of the log body weight. This continues, in this manner, at least until a weight of 244 grams is reached at an age of about sixty days.

The existence of an iodine cycle between the mother and infant rat was confirmed. Several litters of rats

were labeled with I^{131}, by a single subcutaneous dose of 1 microcurie per rat on the day of birth. At that time, an untagged newborn infant was placed with the litter. In vivo counts were taken every forty-eight hours, and after each count the foster litter mate was removed and another untagged infant of the same age substituted. The counts of the substitutes were compared with the counts of the tagged litter mates, and it was found that approximately 9.35% of the average individual count was transferred to the substituted rat every forty-eight hours from his tagged litter mates through the mother's mammary gland. The number in the litter, age of the rats, and body weight, did not affect the amount of I^{131} transferred to the foster rats.

Heart-rate temperature relationships were investigated by placing one rat at a time in an immobilization apparatus which held the rat immersed to the neck in a water bath. The water was cooled by the addition of ice. Intraperitoneal temperatures, ambient temperatures, and an ECG record were taken simultaneously with a Grass Polygraph.

It was found that the relation between the neonatal rat heart rate and body temperature can be best described by the Arrhanius equation within the limits of 16° - $30^{\circ}C$. The previously published data of six other investigators were replotted by the author, and it was shown that the heart rate of several species of animals (both poikilotherms and homeotherms) conform to the Arrhenius equation. It was

also found that the age of the rat was inversely proportional to survival if the heart was stopped by cold. Mass and age did not influence the response of the heart to variations in body temperature.

It is hypothesized that many more species of animals may have similar heart-rate temperature relationships and that some of the current concepts of the influence of exercise on heart rate may have to be re-evaluated.

THYROID FUNCTION IN THE NEONATAL RAT WITH NOTES ON HEART-RATE TEMPERATURE RELATIONSHIPS

By

Alex D. Beltz

A THESIS

Submitted to
Michigan State University
in partial fulfillment of the requirements
for the degree of

DOCTOR OF PHILOSOPHY

Department of Physiology

1966

G40285
10-24-66

DEDICATION

This thesis is dedicated to my wife Caryl in deepest appreciation for her patience, forbearance, assistance, and firm support throughout the entire course of study at Michigan State University.

ACKNOWLEDGEMENTS

The author wishes to express his appreciation for the privilege of having been able to work in association with Dr. E. P. Reineke. The completion of this thesis, as well as any possible future success of the author, can be attributed to the friendship and support given him by Dr. Reineke.

Gratitude is also expressed to Mrs. Judy Anderson who cheerfully assisted with infant injections and radioactive counting, Miss Barbara Brace, who contributed all the art work, Mrs. Beverly Wandel, who bred and cared for the rats used in these experiments, and Mrs. Linda Allison, who made infant thyroid iodine analyses.

Appreciation is also expressed to the Michigan Agricultural Experiment Station for a Special Research Fellowship, as well as laboratory expenses through the course of the experiments.

TABLE OF CONTENTS

	Page
INTRODUCTION	1
REVIEW OF LITERATURE	2
Thyroid Function in the Neonatal Rat	2
Heart-Rate Temperature Relationships	9
MATERIALS AND METHODS	15
Thyroid Function in the Neonatal Rat	15
Heart-Rate Temperature Relationships	21
DATA	23
Thyroid Function in the Neonatal Rat	23
Heart-Rate Temperature Relationships	29
DISCUSSION	33
Thyroid Function in the Neonatal Rat	33
Heart-Rate Temperature Relationships	36
SUMMARY AND CONCLUSIONS	40
LITERATURE CITED	50

Fig

1

2

3

LIST OF FIGURES

Figure		Page
1.	Micrograms thyroxine secreted daily plotted against weight	24
2.	Total micrograms of thyroid iodine plotted against weight	25
3.	Neonatal heart-rate temperature relationship conforms to the Arrhenius equation	30

Table

1.

2.

3.

LIST OF TABLES

Table		Page
1.	Neonatal thyroid function. A listing of rat weight, times of maximum uptake, release slopes (K'_4 and K_4), thyroid iodine content, micrograms of daily thyroxine secretion rates	42
2.	Mother infant iodine cycle average individual per cent dose, number of labeled rats in the litter, foster per cent counts from labeled litter, age of litter and substitute, days counted	44
3.	Heart-rate temperature relationships. Animals whose heart-rate response to cold fits the Arrhenius equation, temperature ranges for the application of the Arrhenius plot, Q_{10}, names of original investigators whose data was replotted by the present author .	45

Table
Table
Table
Compar
Linear
Immob
Arrhe
D
R
R
R
R
T
F
F

LIST OF APPENDICES

Page

Table 1 42

Table 2 44

Table 3 45

Comparison of K_4 and K'_4 Values 46

Linear Regression Equations 47

Immobilization Apparatus 48

Arrhenius Plots of Heart-Rate Versus Temperature . . . 49

Dog
Rabbit
Rat Adult Intact
Rat Adult Swimming
Rat Infant
Turtle
Frog
Fish

its bo

more a

tions

to det

and wh

thyroi

thyroi

with t

that c

that

These

neona

rate,

list

selec

repre

will

funct

ships

INTRODUCTION

The newborn rat is known to have little control of its body temperature. As it matures, it becomes more and more able to regulate its body temperature against fluctuations in the ambient temperature. This study was initiated to determine the level of function of the neonatal thyroid and whether any parallel exists between the development of thyroid function and age.

Immobility of the test animals was required for thyroid hormone output determinations, and was achieved with the application of cold. Subsequently, it was observed that complete immobility resulted from the treatment and that the time required for quiescence increased with age. These observations, and others, prompted a study of the neonatal heart rate as it is related to temperature.

The literature on cooling as it affects the heart rate, is quite extensive and no attempt will be made to list every reference. The author sincerely hopes that the selected lists of references will not, by omission, misrepresent known work as it pertains to this study.

Under each of the major divisions of this paper there will be two sections: one having to do with neonatal thyroid function, and the other with temperature heart rate relationships.

as

SURVEY OF LITERATURE

Thyroid Function in the Neonatal Rat

The function of the neonatal rat thyroid has been, as yet, relatively unexplored.

Jacobson et al (1959) reported that the fetal thyroid first concentrates iodine at the fourteenth to fifteenth day of gestation in mice, whose gestational period is nineteen days. This concentrating ability precedes the formation of follicles and colloid by more than one day. The fetal thyroid gland of the rat shows functional differentiation about the eighteenth day of gestation (Gorbman and Evans, 1943), and one-day-old rats have thyroid gland follicles, colloid, mitotic figures, and colloid droplets in the acinar cells (Phillips and Gordon, 1954). Later (1955) they reported that the thyroid glands of two to four-day-old rats, according to histological evidence after administration of TSH and blood chromatograms, are capable of function.

In the fetal rabbit the first uptake of radioactive iodine by the thyroid gland was detected at the fifteenth day of gestation (Waterman and Gorbman, 1956) when the gland itself was made up of epithelial cords and plates interspersed with mesenchyme. At seventeen to eighteen days the first follicles had appeared and indications of the formation

of

da

Ho

of

in

ti

wi

ge

19

st

si

la

na

la

ra

te

TS

The

ind

day

In

of

but

Hwa

thy

by

of thyroxine and its precursors were found. At nineteen days the precursors and thyroxine had reached adult levels. However, it was not until twenty-one to twenty-two days of gestation that the thyroid abruptly began to accumulate increasing amounts of iodide. This level of activity continued until term. Sheep also seem to follow this pattern with greater variation which is probably due to the longer gestation time (Gorbman et al, 1957, Wright and Sinclair, 1959).

Pituitary-thyroid relationships in the rat were studied by Phillips and Gordon (1954). They found that significant quantities of thyrotropin (TSH) did not circulate in the blood until the eleventh to twelfth postnatal day. They also noted a greater metamorphosis-stimulating activity in the pituitaries of seven to nine-day-old rats than in those of newborn rats, and that rats of fourteen to fifteen days of age with open eyes had less pituitary TSH than those of the same age whose eyes had not yet opened. These findings were associated with an observed gradual increase in rat thyroid cell heights from one to fifteen days of age, with a sudden spurt when the eyes opened. In their next report (1955), they stated that the pituitaries of one to fifteen-day-old rats store relatively little TSH but synthesize and release it at a fairly constant rate. Hwang and Wells (1959) gave evidence that the hypophysis-thyroid system begins to function by birth. They did this by retarding the fetal thyroid with subcutaneous injections

of

tre

efi

ver

by

sur

lir

occ

in

dep

ove

and

ser

fet

thy

thy

int

tra

His

for

by

lif

eli

vit

gla

tha

196

of thyroxine (T_4) and triiodothyronine (T_3), the combined treatment of T_3 and TSH in which the TSH prevents the usual effects of T_3, and hypophyseoprivia, whose effects are prevented by injected TSH. Hypophyseoprivia was accomplished by subtotal decapitation of near term feti which had been surgically removed from the mother and decapitated with the line of severance extending from approximately the external occipital protruberance dorso-ventrally through the mouth in a transverse plane. Fifteen feti survived this hypophysis deprivation for 40 - 77 hours. After the experiment was over the vasculature of the thyroid glands was examined and found to be intact. Myant (1963) also believes that the servo mechanism of thyroid-pituitary control acts during fetal life. Feldman (1960) presumed that the neonatal rat thyroid was responsive to TSH after noting hyperactive thyroids in newborn pups from thyroidectomized dams. In intact dams, he found that exogenous TSH either did not traverse the placenta or did so to a very slight degree. His reasons for this view were that the injected TSH was a foreign protein and, therefore, might have been rejected by the animal, and secondly, that TSH has a very brief half-life and with two injections per day, might have been eliminated too rapidly to affect the fetal thyroid. In vitro studies with incubated fetal and newborn rat thyroid glands, showed a much greater response to thyrotropin (TSH) than did the thyroid glands of adult rats (Nataf and Chaikoff, 1964).

Th

the mother

(1958), an

states tha

the placen

Th

developmen

Gorbman (1

usual prin

operated i

then an im

existed, a

that the t

life for t

developmen

states, is

in those s

mature sta

hormone re

divided th

(1) Hypoth

mothers go

day of ges

four weeks

were produ

daily dosa

Newborn ra

The passage of thyroxine and triiodothyronine from the mother to the fetus in rabbits was reported by Myant (1958), and in rats by Hamburgh et al, (1962). Myant (1963) states that the maternal thyroid hormone can readily cross the placenta in the later stages of pregnancy.

The function of the thyroid hormones in the fetal development of mammals has yet to be fully explored. Gorbman (1958) states that it must be assumed that if the usual principles of evolutionary adaptation and selection operated in the phylogeny of the vertebrate thyroid system, then an important use or value of the system must have existed, and in fact still exists. Myant (1963) suggests that the thyroid hormone is probably required during fetal life for the normal development of some tissues whose earlier development from anlage is independent of it. This, he states, is why thyroid deficiency has a more marked effect in those species in which the young are born in a relatively mature state. Hamburgh et al, (1964) worked on the thyroid hormone requirements of the rat for normal maturation. He divided the experimental animals into several groups:

(1) Hypothyroid neonatal rats were prepared by giving the mothers goitrogen (phenyl-thio-uracil or PTU) on the fifteenth day of gestation and continuing the treatment for three to four weeks postparturition, (2) Hyperthyroid neonatal rats were produced by daily injections of l-thyroxine (T_4). The daily dosages which were given varied with the age of the rat. Newborn rats were given one microgram T_4 per day. The dosage

was increa

given to ra

established

neonatal ra

given with

that thyrox

cerebral an

regulatory

It

hyperactive

gators have

Gorbman (19

by the thyro

this experim

cows and sac

distribution

serum, and v

The blood se

radioactivit

their feti,

amount of thy

hand, had a c

unit weight t

the maternal

of the feti.

Jacobson and

data from sev

was increased gradually until three micrograms T_4 were given to rats twenty-one days and older. This amount was established as the maximum non-lethal dose, (3) Control neonatal rats were injected with normal saline in the amount given with thyroxine to the experimental animals. He found that thyroxine was needed for the normal development of cerebral and cerebellar cortical tissue and the thermo-regulatory mechanism, as well as conditioning and behavior.

It is commonly believed that the thyroid gland is hyperactive during fetal and neonatal life, and many investigators have reported this (Review by Waterman, 1958). Gorbman (1952) published data which showed high I^{131} uptake by the thyroid gland of the bovine fetus near term. For this experiment, he injected I^{131} into two near-term pregnant cows and sacrificed them twenty-four hours later. The distribution of I^{131} was determined in thyroids, blood serum, and various organs of the adult and fetal animals. The blood sera of the feti contained only slightly more radioactivity than those of the cows, and in both cows and their feti, this was in the form of iodide, with a small amount of thyroxine (T_4). Fetal thyroids, on the other hand, had a concentration of I^{131} 6 to 7 times greater per unit weight than did those of the mothers. Histologically, the maternal thyroids appeared much less active than those of the feti. These findings were confirmed in mice by Jacobson and Brent (1959). Van Middlesworth (1954), with data from seven newborn human infants which had received

1 microcurie

Gorbman with

thyroid glan

for I^{131} de

extrapolati

obtained a

thyroid gla

tively high

newborn inf

lated that

uterine ho

that the P

4 or 5, th

levels nor

that these

thyroid b

reported

seven-day

over rate

It was fo

of I^{131} i

more thyr

maternal

however,

turnover

have bee

1 microcurie of I^{131} came to the same conclusion as had Gorbman with bovine feti. He made *in vivo* counts of the thyroid glands 24 hours after injection. With the corrections for I^{131} decay, he obtained a release slope (K), and by extrapolating this release slope line to zero time, he obtained a total theoretical per cent dose uptake by the thyroid glands. Fisher and Oddie (1964) observed a relatively high rate of thyroidal radioiodine clearance in the newborn infant during the "first hour of life," and speculated that this may be related to a relatively high intrauterine hormone secretion rate. Marks *et al* (1960) found that the PBI values of human infants rose from birth to day 4 or 5, then slowly fell during the first year of life to levels normal for older children and adults. They found that these values are not merely the result of increased thyroid binding globulin (TBG). Slebodzinski (1965) also reported neonatal hyperactivity of the thyroid gland in seven-day-old pigs. He based his conclusions on the turnover rates of labeled thyroxine in the serum of these animals. It was found that one hour after intraperitoneal injection of I^{131} into pregnant rats, the fetal thyroid contained more thyroxine and triiodothyronine per mg. than the maternal thyroid gland (Waterman, 1958). Myant (1963), however, states that in the fetal rat the thyroid hormone turnover is much slower than in the adult animal.

Most of the studies with neonatal thyroid glands have been based on radioactive iodine uptake rates, protein-

bound iodi

turnover r

the functi

of the ass

do not tak

activity o

release by

factors su

immature r

This would

gland with

values (Sa

findings o

by Jacobso

Van Middle

factors in

question,

of measure

In

of the neo

direct out

by Bhatnag

of a numbe

They are:

slope (K'_4

iodine det

estimate o

of thyroid

bound iodine (PBI) values, and injected I^{131} thyroxine turnover rates. Values which consider only one phase of the functioning thyroid gland are open to question because of the assumptions that have to be made. These assumptions do not take into account sudden increase or decrease in activity of the iodine trapping mechanisms, inhibition of release by various exogenous and endogenous factors, or other factors such as the apparently reduced ability of some immature rat kidneys to excrete iodine at an adult rate. This would account for the high I^{131} uptake by the thyroid gland with high serum iodide as well as high thyroid iodine values (Samel and Caputa, 1965). This may explain the findings of Gorbman (1952) in the bovine feti, and in mice by Jacobson and Brent (1959). The release slopes (K) of Van Middlesworth (1954), because of insufficient correction factors in determination of the output slope, are open to question, as are all his assumptions based on only one type of measurement.

In the experiments reported herein, the function of the neonatal thyroid will be shown by application of the direct output method (worked out by Reineke, and reported by Bhatnagar, 1963). This method includes the combination of a number of measurements for the determination of TSR. They are: (1) per cent dose uptake, (2) I^{131} release slope (K_4' and K_4) corrected for decay, and (3) total thyroid iodine determination. With a combination of these factors an estimate of TSR can be made in terms of the actual amount of thyroid hormone secreted daily.

The

times, to th

that metabol

did admit th

neonatal ra

other inves

Hill, 1947)

temperature

atures (25°

and at ambi

of the infa

These data

by the infa

adds that

ature and

heterother

early in l

Th

heart rate

heart rate

kittens ar

conditions

between he

on the oth

should be

temperatu

Temperature Heart Relationships

The term "poikilothermic" has been applied, many times, to the neonatal rat. Gulick (1937), however, reported that metabolic studies did not support this concept but he did admit that, all things taken into consideration, the neonatal rat is "essentially poikilothermic." Several other investigators concurred in this view (Brody, 1943; Hill, 1947). Poczopko (1961), however, reported that the temperatures of even one-day-old rats, at low ambient temperatures (25°- 30°C), were higher than those of the environment, and at ambient temperatures of 35°C, the body temperatures of the infant rats were "at most" equal to the environment. These data show the existence of body temperature control by the infant rat even though it is of a low order. Poczopko adds that human infants also exhibit a variable body temperature and he suggests that such neonatal individuals be termed heterothermic to indicate incomplete temperature control early in life.

The first investigator to work with temperature and heart rates was Hall (1832). Hamilton et al (1937) measured heart rates as related to rectal temperatures of restrained kittens and adult rats in an ice box with ambient temperature conditions of 35°- 42°F. He reported a linear relationship between heart rate and rectal temperature. Fairfield (1948), on the other hand, showed that intraperitoneal temperatures should be taken in order to more closely approximate "core temperature." She worked with neonatal rats of zero to

seventeen da

dual suscept

rates were l

and that new

or lower whi

lower than l

lowered colo

His temperat

by Fairfield

(Hannon, 195

1964). Rich

to rectal te

were taken o

old, and sho

of six to se

Biörek and J

South Africa

the homeothe

water temper

(dogs, frogs

Adolph and t

activities o

rats were re

auricles of

6°C while th

The rate of

logarithmic

seventeen days of age and found much variability in individual susceptibility to cold. She also found that heart rates were lower in the younger as compared with older infants, and that newborn rats recover from body temperatures of 7°C or lower while adult rats seldom recover from temperatures lower than 14°- 16°C. Adult rat heart rates in relation to lowered colonic temperatures were reported by Adolph (1950). His temperature heart-rate curve was similar to that plotted by Fairfield, as are the curves of many other investigators (Hannon, 1958; Lipp and Folk, 1960; Baker and Horvath, 1964). Richards et al (1953) reported heart rates in relation to rectal temperatures of newborn mice. The ECG recordings were taken of three litter mates from birth to twenty-days-old, and showed a marked increase of heart rate at the age of six to seven days as the animals developed hair.

Biörek and Johansson (1955) worked with dogs, hedgehogs, South African frogs, and fish using rectal temperatures for the homeotherms, cloacal temperatures for the frogs, and water temperatures for the fish. Three of the curves plotted (dogs, frogs, and fish) were similar in shape to those of Adolph and the other workers cited earlier. Spontaneous activities of isolated auricles of hedgehogs, hamsters, and rats were reported by Hirvonen (1955). He stated that the auricles of hibernating mammals stopped beating at 1.5°-6°C while the nonhibernator heart beat ceased at 16° - 18°C. The rate of the hamster auricle was reported as a linear logarithmic function of the temperature. The rabbit and rat

auricle did

others (Lyma

rat auricle

even the han

ventional Ar

step-wise de

colonic tem

that if the

temperature

effect of c

of the rabb

using recta

the result

(1958) fou

rate of th

were taken

showed a h

to a recta

more abrup

Bullard (1

but pointe

heart rat

colonic i

on isolat

done by L

seven spe

Sigmodon

auricle did not fit the same pattern. This was taken by others (Lyman and Blinks, 1959) to mean that the rabbit and rat auricle did not follow the Arrhenius equation. However, even the hamster data were not plotted according to the conventional Arrhenius Method. Nardone (1955b) reported a step-wise decrease in heart rate with a decrease in the colonic temperatures of the opossum. He stated, in addition, that if the mean heart rates are plotted against mean colonic temperatures a straight-line relationship is obtained. The effect of cold on the isolated as well as the intact heart of the rabbit was examined by Covino and Beavers (1958) using rectal temperatures for the intact rabbit. Both of the resulting curves resembled those of Adolph. Hannon (1958) found that the effect of anesthesia on the heart rate of the rat was quite significant. Rectal temperatures were taken and it was found that rats with less anesthesia showed a higher heart rate at all temperatures ranging down to a rectal temperature of 18°C where the heart rate dropped more abruptly than in the deeply anesthesized subjects. Bullard (1959) agreed with the results of Hamilton et al, but pointed out that a true linear relationship between heart rate and temperature could not be established since colonic instead of heart temperatures were measured. Studies on isolated hearts of hibernators and nonhibernators were done by Lyman and Blinks (1959). They stated that of the seven species studied (Sciurus carolinensis-grey squirrel, Sigmodon hispidus-cotton rat, Aplodontia rufa-mountain beaver,

Mescoricetus

thirteen-lin

and Marmota

over the en

not present

relationshi

did not agr

relationshi

plotted aga

with hamste

which were

that hiber

killed non

relationsh

Baker and

with Adolp

heart rate

ments the

in the es

of this d

heart bea

per minut

isolated

ature in

agreed w

hibernat

bat hear

Mescoricetus auratus-golden hamster, Citellus tridecimlineatus-thirteen-lined ground squirrel, Tamius striatus-chipmunk, and Marmota monax-woodchuck), none fit the Arrhenius equation over the entire temperature range. However, actual data were not presented. The graph showing the heart rate temperature relationships for hamsters in the above group of animals did not agree with that of Hirvonen (1955) in that no linear relationship was found when the logarithm of heart beat was plotted against temperature. Lipp and Folk (1960) worked with hamsters, white rats, and thirteen-lined ground squirrels which were restrained and put into a cold box. They found that hibernators recovered from body temperatures which killed nonhibernators. Heart rate and rectal temperature relationships in swimming adult rats were determined by Baker and Horvath (1964) who reported curves which agreed with Adolph. Dahlen (1964) found that with cold, the cat heart rate decreased in a linear fashion. In these experiments the body temperature was taken from a thermistor placed in the esophagus at the level of the heart. The linearity of this decrease was measured from 35° to 20°C, and the heart beat was reduced from one-hundred and seventy-five per minute to thirty-eight per minute. The heart rates of isolated bat hearts was found to be a function of temperature in both summer and winter animals, and, in general, agreed with those of isolated hearts of several species of hibernators as reported by Michael and Menaker (1963). The bat heart rate temperature curves fit the Arrhenius equation

over the ent

-25°C), and

et al (1960)

in the turtl

metically a

plotted for

(1960) conc

as well as

and reheati

time in min

jected to d

digested wi

and culture

elaborated

other hear

a Q_{10} of a

Th

by Wekstei

first thre

of sympath

to sixteen

to be a fu

nervous sy

reached by

regulatio

states th

thermoreg

developme

over the entire temperature range of the study (-1.0°C - -25°C), and can be described by a Q_{10} of 3.5. Hutton et al (1960) reported a temperature heart rate relationship in the turtle (Pseudemys scripta) which, when plotted arithmetically against temperature, is similar to that previously plotted for rats and several animals. Löfgren et al (1960) concerned themselves with times to cardiac arrest as well as heart rates under conditions of extreme cold and reheating. Heart rates were stated in relation to the time in minutes the animals (rat, frog, and toad) were subjected to different ambient temperatures. Rat hearts were digested with trypsin and single beating cells were isolated and cultured by Harary and Farley (1960). These cells elaborated protoplasmic extensions which, when they contacted other heart cells, synchronized the beat. These cells had a Q_{10} of about three.

The control of the rat neonatal heart beat is said by Wekstein (1965) to be divided into two periods: (1) the first three days of life when the heart rate is independent of sympathetic nervous system activity, and (2) days six to sixteen "when the observed increase in heart rate appears to be a function of the level of activity of the sympathetic nervous system." This is in agreement with the conclusions reached by Alimukhamedov (1962) about the phases of thermoregulation development in young rodents. In this work he states that during the first days of post natal development thermoregulation is accomplished by muscle action with later development of chemical thermoregulation.

Prod

the heart is

state that

primarily o

of ion tran

stated that

linked to c

and time, a

depolariza

fibers. V

cold appar

diffusion

says that

exposure t

time lag.

not aboli

of potent

accounted

increase

Production of the impulse and its conduction over the heart is not well understood. Hollander and Webb (1955) state that the duration of the action potential depends primarily on the rate of repolarization and thus on the rate of ion transport through the membrane. Hecht (1965) has stated that the self-excitation of pacemaker tissues is linked to changes in membrane currents depending on voltage and time, and that threshold, resting potential, and diastolic depolarization interact in controlling automaticity of cardiac fibers. Van Harreveld and Christensen (1957) report that cold apparently reduces nerve metabolism so that the ionic diffusion gradient cannot be maintained. Deleze (1960) says that on rapid heating of Purkinje fibers after cold exposure there is a rapid rise in their potential with no time lag. He also reports that temperature sensitivity is not abolished by sodium-free solutions, and that the drop of potential at a body temperature below 20°C cannot be accounted for by extracellular potassium accumulation or an increase of inward sodium current.

Th

were bred

Al

ml Tubercu

needle ins

the muscu

the outer

a small b

technique

through t

ways: su

curie ca

of fifte

rats one

by the t

extremel

the meth

turnover

On the c

ferred

MATERIALS AND METHODS

Thyroid Function of the Neonatal Rat

The rats used were all of Carworth CFN strain and were bred in this laboratory.

All injections of infant rats were given with a one ml Tuberculin syringe through a 1/2 inch twenty-seven gauge needle inserted at the base of the tail and pushed through the musculature of the hind leg, emerging subcutaneously on the outer thigh. Injections were of 0.1 ml volume and raised a small bleb on the outer surface of the skin. With this technique there was very little loss of injected material through the puncture wound.

In these experiments I^{131} was administered in two ways: subcutaneous injection of the infants with one microcurie carrier-free I^{131}, and (2) intraperitoneal injection of fifteen microcuries of carrier-free I^{131} into pregnant rats one or two days before parturition. Since I^{131} uptake by the thyroid gland took place in the infants at an extremely slow rate (in relation to adult uptake rates), the method No. 2 was used to determine the thyroid I^{131} turnover rates in young rats of one to ten days of age. On the day of birth, the young of tagged mothers were transferred to untagged lactating rats.

forty-eig

cold. A

inch NaI

analyzer

scaler-a

Model 16

counting

on the s

neath ar

25 mm di

four in

35 cm.

region

of the

Body ba

Standar

given

correc

body b

Thyr

% Inj.

log gr

inspec

culate

In vivo external thyroid counts were taken every forty-eight hours from the neonatal rats immobilized by cold. A heavily shielded scintillation probe with a two inch NaI crystal, was attached to a transistorized scaler-analyzer (Nuclear-Chicago, Model 8725). Connected to the scaler-analyzer was a count rate meter (Nuclear-Chicago, Model 1620 CS) which was used to determine the optimal counting geometry before recording the count for each rat on the scaler. The scintillation probe was mounted beneath an aperature 19 mm in diameter for infant rats, and 25 mm diameter for thirty- and sixty-day-old rats, located four inches from the end of a lead plate 2.5 cm x 38 cm x 35 cm.

The in vivo counts were taken by centering the thyroid region over the hole in the lead plate, adjusting the position of the rat for maximum count as seen on the count rate meter. Body background counts were taken over the epigastric region. Standards were made up with dosages ten per cent of those given the experimental animals. The counts thus taken were corrected for physical decay as well as environmental and body background with the formula established by Wolff (1951).

$$\text{Thyroid counts} - \left(\frac{\text{body background} + \text{environ. backgrnd}}{2}\right) \times 100$$

$$\% \text{ Inj. Dose} = \frac{}{(\text{Standard counts} - \text{Environmental background}) \times 10}$$

The per cent dose was then plotted on two cycle semi-log graph paper, and the line of best fit was drawn by inspection. The daily thyroid iodine output rates were calculated from the line of best fit on the semi-log graph in

the follow

a. $\frac{0.6}{T_{1/}}$

b. K i
exp

c. K'_4

d. U =

e. Th

f. K_4

T

determine

cited by

over rat

the body

weighed.

until th

procedur

blood pl

taken fr

2 Ce^{+++}

(yello

Iodine

zation

the ext

present

the following manner:

a. $\frac{0.693}{T_{1/2}(\text{days})} = K$ (the semi-log constant for the line)

b. K is converted to e^{-x} from a table of negative exponential functions.

c. $K_4' = 1 - e^{-x}$

d. U = maximal per cent uptake of the injected I^{131} dose by the thyroid. This is estimated from a line extrapolated to zero time on the semi-log graph.

e. Then $K_4 = \frac{K_4'}{1 - U}$

f. K_4 = daily output rate of thyroidal iodine

The thyroid secretion rates for neonatal rats were determined by the direct output method (worked out by Reineke, cited by Bhatnagar, 1963). After daily thyroid iodine turnover rate (K_4) has been established, each rat is killed, the body weight taken, and the thyroid gland removed and weighed. The glands are then placed in Dietrich's solution until they can be analyzed for total iodine content.

Total thyroid iodine determinations were made by a procedure modified from the method of Barker et al (1951) for blood plasma PBI. The chemical reaction for this method was taken from work done by Sandell and Kolthoff (1937).

$$2\ Ce^{++++} = H_2AsO_3^- + H_2O \xrightarrow[\text{(catalysis)}]{I^-} 2\ Ce^{+++} + H_2AsO_4^- + 2\ H^+$$

(yellow) (colorless)

Iodine catalyzes the reduction of cerium causing decolorization of the solution. If time and temperature are constant, the extent of declolorization measures the quantity of iodine present.

The
100 mm tube
and its con
overnight.
were incin
an electri
up to 1100
ml of 2 N
tilled wat
tube were
at 2000 R
For infan
4 ml of t
the dupli
water. T
solution
in a warm
incubatio
the thyr
20 minut
27°C wer
0.5 ml o
the give
was adde
were rer
Coleman
blue fi

The gland from each rat was placed in a pyrex 25 x 100 mm tube with one ml of 4 N sodium carbonate. The tube and its contents were dried in an oven at 90° to 95°C overnight. The next day the tube and its dried contents were incinerated for two to three hours at 625° to 650°C in an electric muffle furnace equipped with a pyrometer ranging up to 1100°C. After the tubes were removed and cooled, two ml of 2 N HCl, two ml of 7 N H_2SO_4, and 6 ml of glass distilled water were added to the ash. The contents of the tube were mixed well and centrifuged for twenty minutes at 2000 RPM (International Centrifuge, Model UV, Head 240). For infant rat thyroids, two duplicates were made with 2 and 4 ml of the supernatent solution from each tube. Each of the duplicates was made up to 5 ml with glass distilled water. To each tube was added 0.5 ml of arsenious acid solution with a blow-out pipette. The tube was then placed in a warming bath. The temperature of the water bath and incubation time varied with the age of the rats from which the thyroids were taken. For example, for one-day-old rats 20 minutes at 50°C and for ten-day-old rats 15 minutes at 27°C were used. After a fifteen minute warming period, 0.5 ml of Ceric ammonium sulfate was added. At the end of the given time period, 0.5 ml of a 0.1% solution of Brucine was added to each tube to stop the reaction. The tubes were removed from the water bath and read directly on a Coleman Universal Spectrophotometer (Model 11, with a PC-4 blue filter) at a wave length of 480 millimicrons. The

instrument
water. In
as describ
for the re
the standa
each of th
curves pre
been plott
T
thyroxine
plied by
is the mi
each day.
worked ou
Multiply
will giv
secretes
this lab
iodine a
thyroid
Rivers
release
secrete

Parts
Potency

instrument was set for 100% transmittance with distilled water. In each age group, two reagent blanks were prepared as described above excepting the thyroid tissue. The values for the reagent blanks were subtracted from the readings of the standards and unknowns. The concentrations of iodine in each of the tubes were read directly from the standard iodide curves prepared under identical conditions and which had been plotted on arithmetic graph paper.

To calculate the daily thyroid secretion rate in thyroxine (T_4) equivalents, the output rate (K_4) was multiplied by the total iodine content of the gland. The result is the micrograms of hormonal iodine secreted by the rat each day. Conversion of this value involved calculations worked out by Reineke, and cited by Bhatnagar (1963). Multiplying the micrograms of daily iodine secretion by 1.529 will give thyroxine equivalents. However, the gland also secretes triiodothyronine (T_3) which has been determined in this laboratory as being 4.85 times as potent per unit of iodine as T_4 in suppressing TSH release in the rat. The rat thyroid contains 6 parts of T_4 to 1 part T_3 iodine (Pitt-Rivers and Rall, 1961). Then the relative potency of the released compounds are calculated in relation to the amounts secreted as follows:

	T_4	T_3	Totals
Parts	6.00	1.00	7.00
Potency	1.00	4.85	
	6.00	4.85	10.85

To adjust
potencies
and T_3), t
The values
1.529 x 1
This will
activity.

T
iodinated
with I^{131}
thyroid i
T_3), and
same prop

F
cycle bet
micturit
mother wh
lation o

Jelinek,
of her y
and Capu
infant t
thyroid
portion
rats nur
iodine c
specific

To adjust the T_4 equivalents in proportion to the relative potencies of the two compounds assumed to be released (T_4 and T_3), the factor which is used is $\frac{10.85}{7} = 1.55$. The values then are combined in the equation below:

1.529 x 1.55 x Thyroid iodine content = ug daily of secreted T_4

This will express the total hormonal effect in terms of T_4 activity.

The assumptions of this method are: (1) that the iodinated compounds in the thyroid are uniformly labeled with I^{131}, and (2) that all the iodine released from the thyroid is in the form of thyroxine (T_4) or triiodothyronine T_3), and (3) that these two compounds are released in the same proportions in which they occur in the thyroid.

Experiments were conducted to determine the iodine cycle between mothers and infants. It is known that micturition of the very young infant is controlled by the mother who, at regular intervals, voids the young by stimulation of the perineal region with her tongue (Capek and Jelinek, 1956). The mother, while stimulating the perineum of her young also ingests at least some of the urine (Samel and Caputa, 1965). In this way, iodine is cycled from the infant to the mother and partitioned between the mother's thyroid and mammary glands. Thence, by way of the milk, a portion of the iodine is given back to the infant. Young rats nurse about every hour. Therefore, every hour, the iodine coming into the infant would slightly increase the specific activity of the thyroid iodine, and concomittantly,

reduce th

would the

However,

so that a

method wo

experimen

F

subcutane

injection

to each t

young, we

described

and anoth

infants w

magnitude

ranging

were pla

diagram,

until th

on three

Medical

recordin

temperat

channels

reduce the output slope (K_4). The direct output method would then underestimate the daily thyroid secretion rate. However, the infants nurse throughout the experimental period so that any estimate of the thyroid secretion rate by this method would vary by a fairly constant amount from one experiment to another.

Forty-five rats in several litters were injected subcutaneously with one microcurie of I^{131}. On the day of injection, a nonradioactive infant of the same age was added to each tagged litter. The litters, with the substituted young, were then counted every other day as heretofore described. After each count, the substituted rat was killed and another of the same age put in its place. Fifteen infants were examined in this way to determine the approximate magnitude of the iodide cycle between the infant and mother.

Heart-Rate Tempeature Relationships

Seventy-two neonatal rats were used in this study, ranging in age from one-day to twenty-days. The subjects were placed in an apparatus devised by the author (see diagram, Appendix p.48) and gradually cooled in a water bath until the heart stopped. The data were recorded simulateously on three channels of a Grass Model Five Polygraph (Grass Medical Instrument Company, Quincy, Mass.). Two of the recording needles traced the ambient and intraperitoneal temperatures and the third recorded the ECG. All three channels had Grass Model Five Driver Amplifiers. Temperatures

were take

probe (No

Chicago,

with Poin

gauge).

temperatu

experimen

intraperi

a Tele-th

Model 840

these, in

Preamplif

made with

the head,

to the di

The above

which led

The EEG P

of suffic

were taken by two thermistors: a general purpose flexible probe (No. 8430 Cole-Parmer Instrument and Equipment Company, Chicago, Illinois), and a Semi-solid Insertion Thermistor with Pointed Tip (No. 8481 Cole-Parmer Instrument Co. 20 gauge). The general purpose thermistor took the ambient temperature being placed next to, but not touching, the experimental animal. The pointed-tip thermistor took the intraperitoneal readings. Each thermistor was attached to a Tele-thermometer (Yellow Springs Instrument Co., Inc. Model 8400 Cole-Parmer Instrument and Equipment Co.) and these, in turn, were attached to Model 5 P 1 Low Level Preamplifiers of the Grass Polygraph. ECG recordings were made with a subcutaneous needle electrode at the back of the head, and a second lead connected with an alligator clip to the distal end of the intraperitoneal thermistor probe. The abovementioned leads were connected to an ECG cable which led to a Model 5 P 5 EEG Preamplifier in the Polygraph. The EEG Preamplifier was found necessary to produce tracings of sufficient amplitude to be counted.

T

and it wa

iodine an

equations

secretion

iodine ar

T

secreted

shown in

secretio

There is

order, a

reaches

abrupt a

conclusi

coeffici

is not s

efficien

level.

in comp

the tot

DATA

Thyroid Function of the Neonatal Rat

The raw data were plotted several different ways and it was found that weight is related more clearly to thyroid iodine and daily thyroid secretion rate than to age. The equations for the lines on both the graph for daily thyroid secretion rate with weight, and the graph for total thyroid iodine and weight are shown in Figures 1 and 2, respectively.

Thyroxine secretion, in terms of micrograms T_4 secreted per day was plotted against body weight in gm, as shown in Figure 1. Slope I represents daily thyroxine secretion rate (TSR) for infant rats weighing up to 22 gm. There is a TSR for these rats although it is of a very low order, and it continues at the same level until the infant reaches a weight of 22 grams. At this time there is an abrupt and continuous increase in the TSR extending to the conclusion of the experiment. It will be noted that the coefficient of correlation (r) for slope I is 0.479 which is not significant at the 5% level. Slope II has a coefficient of correlation (r) of 0.9586 which is at the 1% level.

Figure 2 shows total micrograms of thyroid iodine in comparison with grams body weight. Slope I represents the total thyroid iodine of neonatal rats weighing up to

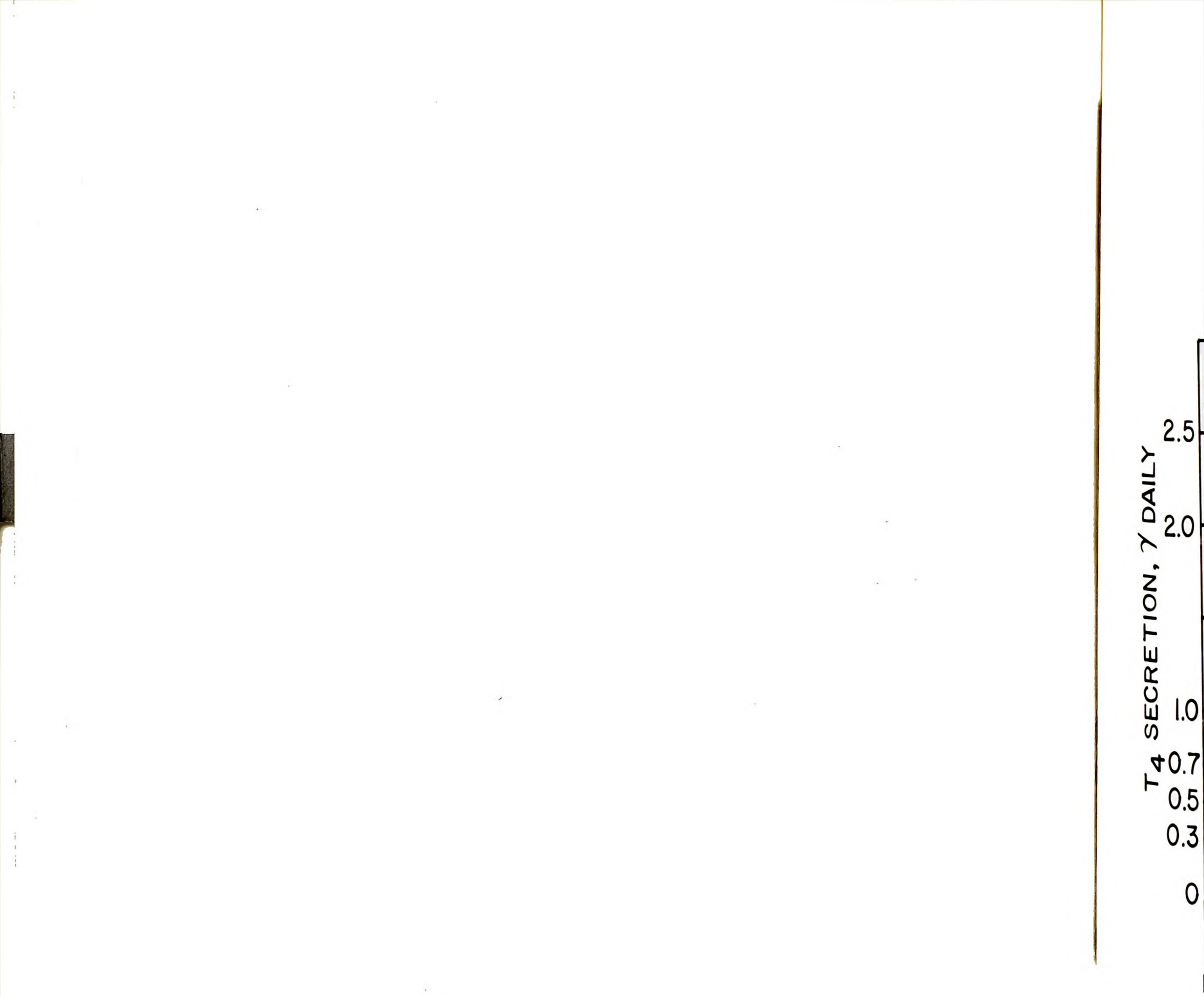

Figure

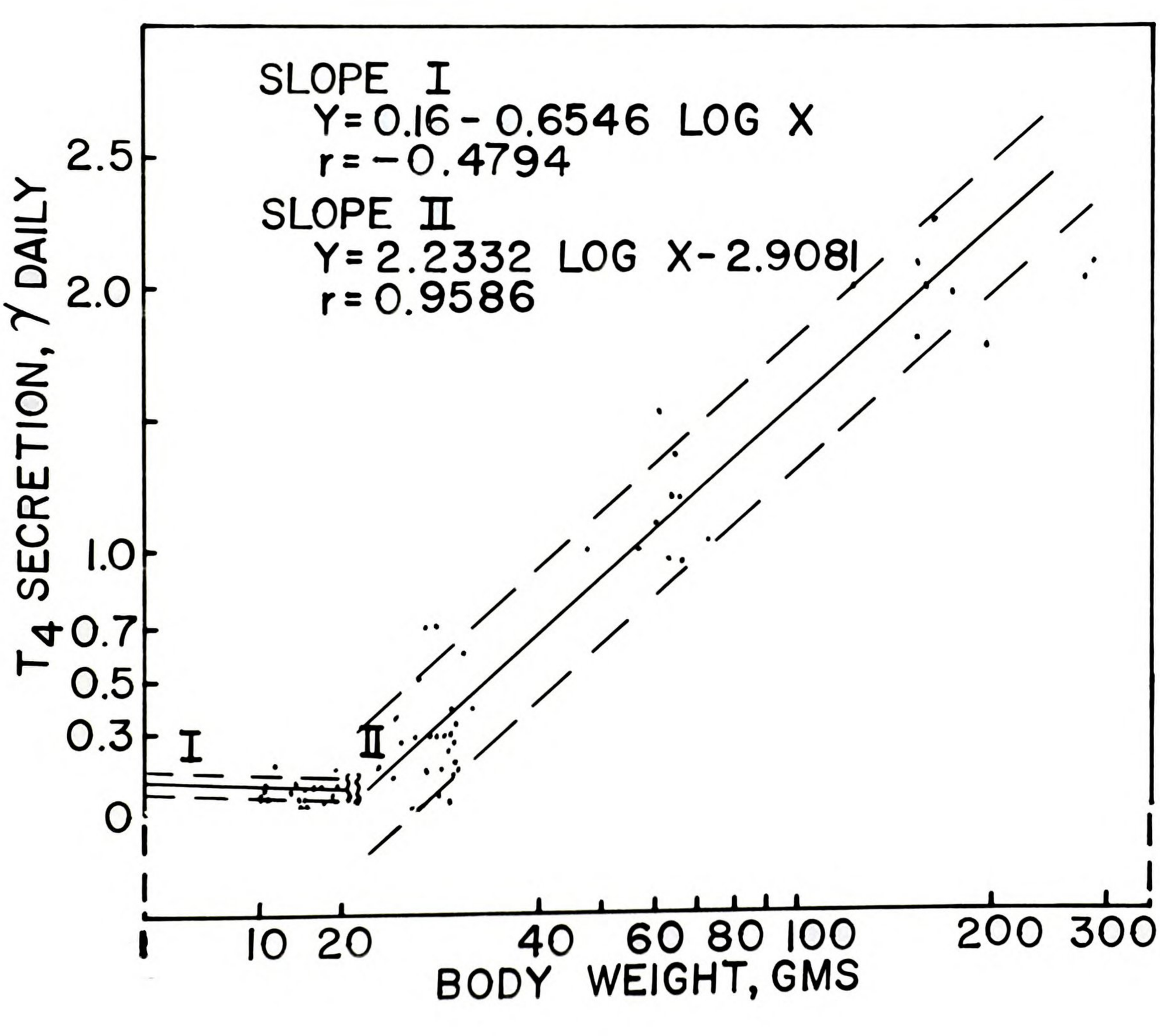

Figure 1. Micrograms thyroxine secreted daily plotted against weight.

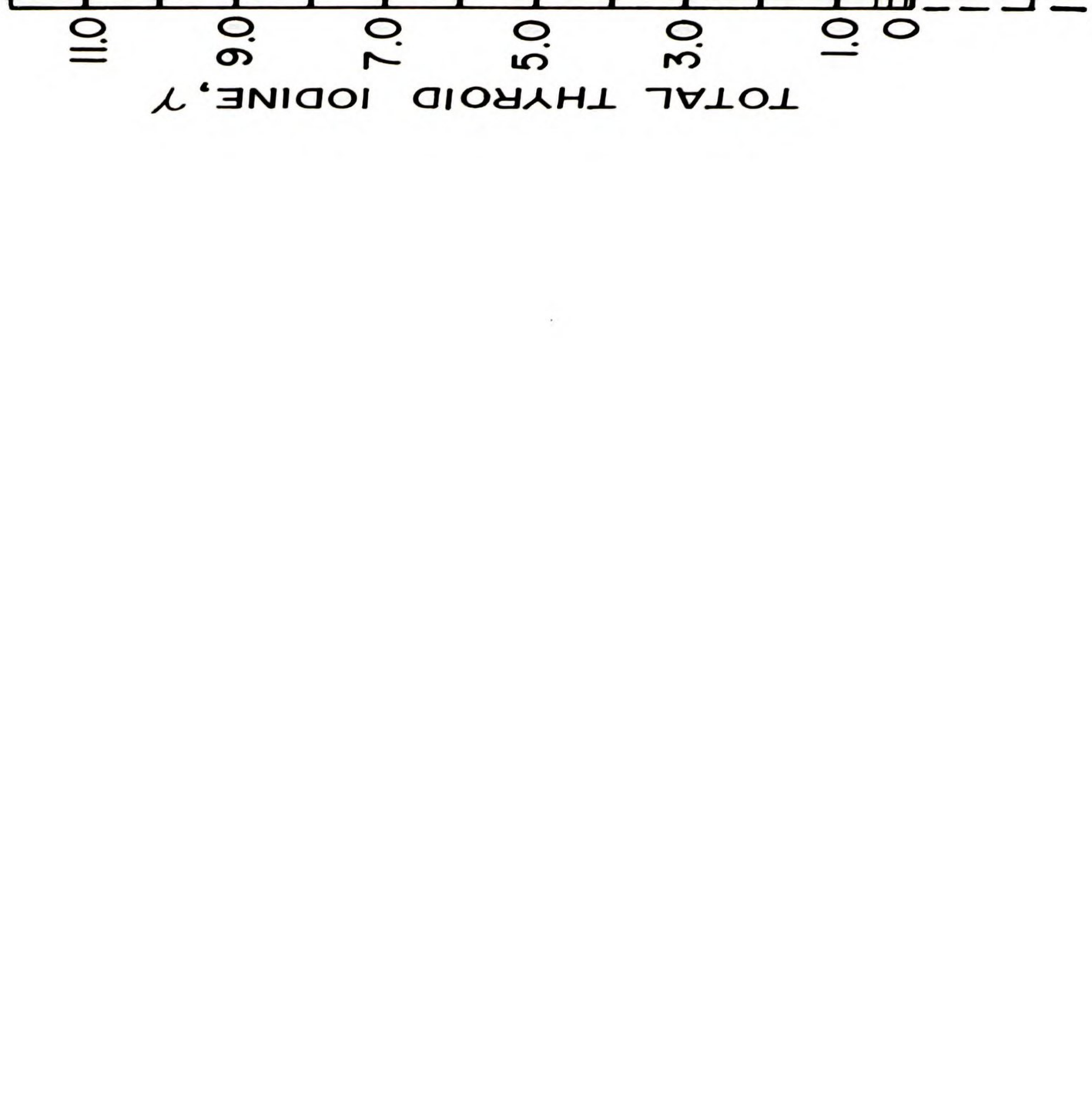

Figure

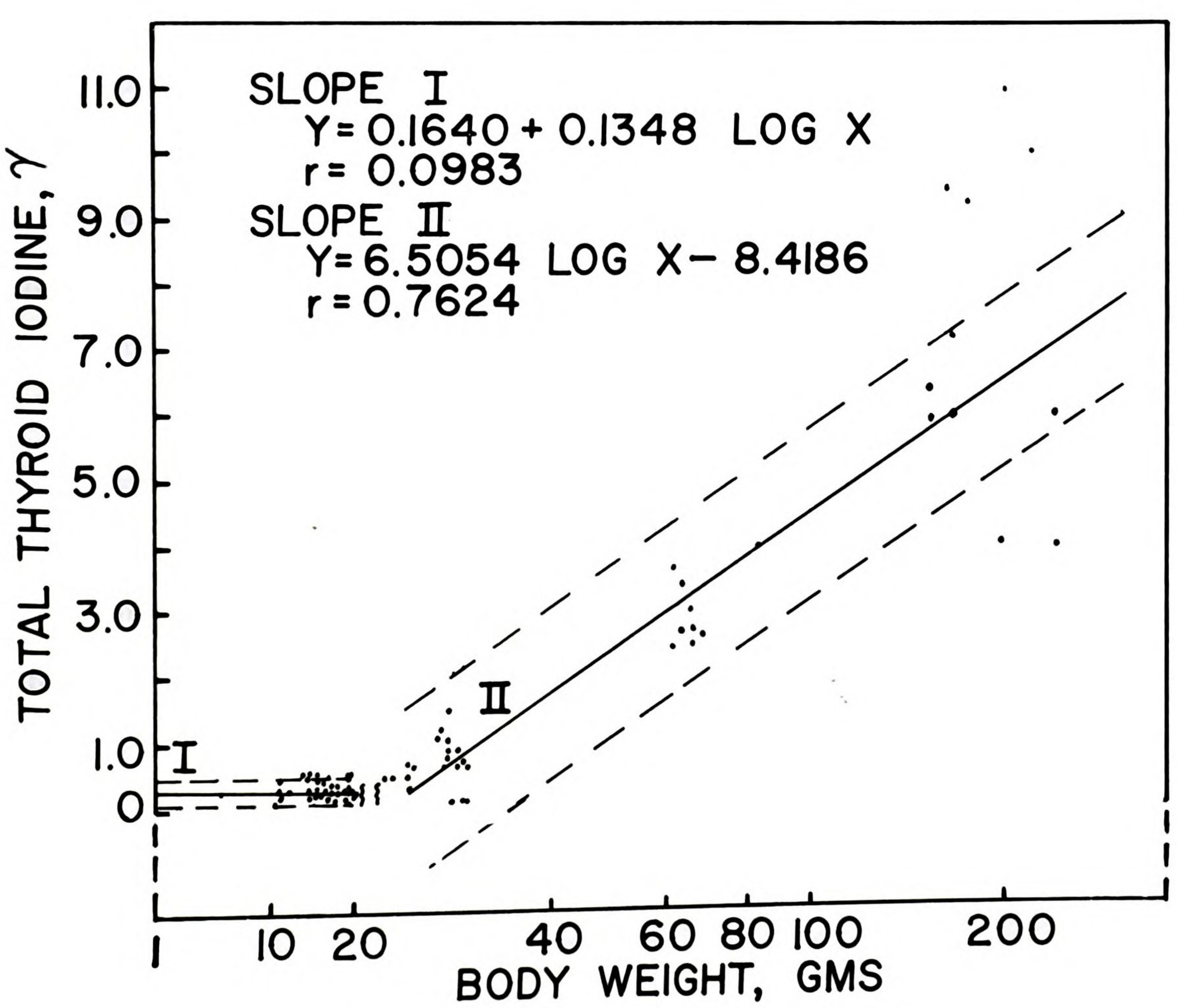

Figure 2. Total micrograms of thyroid iodine plotted against weight.

22 gm. It
functional
the level
gm, there
contained
Slope II,
line funct

The coeffi
which is n
is 0.7624

Th

Figures1 a
Appendix,
was applie
The TSR, p
at the 10%
weight rel
iodine con
at the 0.1
related, w
were used.

Ta

weight, an
parative p
weighing u
gm. Rats
27.41 ± 0.

*Standard

22 gm. It must be pointed out that, although there is a functional thyroid gland in the very young rats of Group I, the level of function is quite low. When the rat reaches 22 gm, there is a marked increase in the amount of iodine contained by the thyroids of Groups II, III, and IV. Slope II, which shows this increase, is again a straight-line function throughout the remaining time of the experiment. The coefficient of correlation (r) for slope I is 0.0983 which is not significant at the 5% level, while r for slope II is 0.7624 which is significant at the 1% level.

The equation for the lines of regression plotted in Figures 1 and 2 were determined with formulae shown in the Appendix, p. 47. The non parametric Corner Test of Association was applied to the data to find if other trends existed. The TSR, plotted against age was found to be non-significant at the 10% level, as were age and weight, and both age and weight relationships to slope (K_4). However, the thyroid iodine content and age values were significantly correlated at the 0.1% level. Since age and TSR were not significantly related, weight relationships for both TSR and iodine content were used.

Table 1 was arranged in an ascending order of rat weight, and arbitrarily divided into four groups for comparative purposes. Group I represents data from rats weighing up to 20 gm, with a mean weight of 14.08 gm $\pm$ 0.039* gm. Rats in Group II weighed 20-32 gms with a mean of 27.41 $\pm$ 0.414 gm. Rats in Group III weighed 60-70 gm with

*Standard error of the mean.

a m
wei

tot
put
zer
ra
pr
th
ra
of
3.
be

af
hi
ca
to
va
f
t
b
A
i

d
r
l

a mean value of 63.98 ± 1.84 gm, and rats in Group IV weighed 152.4 - 244 gm with a mean of 186.95 ± 12.36 gm.

The U values of Table 1 represent the theoretical total maximum I^{131} uptake and are taken from the true output slope line (on the per cent dose graph) extrapolated to zero time. There are no U values for Group I since all rats in this group gained their radioactive iodine from a preparturition injection of their mothers. After birth, these animals were transferred to a nonradioactive lactating rat. Group II values are from .62 -3.0%, having a mean value of 1.544 ± 0.72%, Group III U values range between 2.2 and 3.5% with a mean of 3.044 ±0.172%. Group IV values vary between 6.4 and 9.8% with a mean of 7.43 ± 0.39%.

The "time to maximum uptake" is the length of time, after injection, at which the thyroid count reaches its highest point. Group I again can have no values in this category for the following reasons: (1) fetal proximity to the needle used for the intraperitoneal I^{131} injection varied greatly, (2) the unknown partitioning of the I^{131} from the blood stream between the developing mammary gland, thyroid, and feti. Group II times for maximal uptake varied between four and six days, with a mean of 4.25 ± 0.11 days. All of the animals in Group III and IV had maximal uptake in two days.

The true daily output slope (K_4) cannot be accurately determined for Group I, since the calculation of this slope requires a U value (see Materials and Methods for the calculation). Therefore, K_4' values which are similar to, but not

identic

the dai

iodine

large

tion i

of the

the fo

about

mates

rat i

perio

mamma

had n

was c

by th

which

is c

Neon

have

infa

inje

fro

had

the

the

identical with K_4 estimations, had to be used to calculate the daily secretion of thyroxine (T_4) equivalents.

In Table 2 are the results of the mother-infant iodine cycle experiment. The individual variation is quite large but is approximately the same as the individual variation in all of the neonatal thyroid studies. The mean value of the iodine transferred from the radioactive litter via the foster mother to the untagged, substituted infant is about 9.36 $\pm$ 0.20%, of the mean thyroid count of the litter mates. This means that 9.36% of the thyroid count of a single rat in the litter was transferred, in a forty-eight hour period, to the substituted, untagged infant through the mammary gland of the foster mother. Inasmuch as the mother had not been given I^{131}, it is clear that the radioactivity was obtained by ingestion of urine of the tagged infants by the untagged mother, who cycles it through her milk, which, in turn, is ingested by the untagged infant. This is consistent with data obtained by Samel and Caputa (1965). Neonatal age, weight, and the number in the litter apparently have no effect on the amount of iodine received by each infant.

The average I^{131} counts in the thyroids of the injected litters were compared with the counts obtained from the thyroids of the substituted, untagged young which had been with the litter for forty-eight hours. Even though the counts from the substituted young were of a lower order, they paralleled those of the average litter count. That is

to say

in suc

of the

ciated

ature

shown

is an

rate

absol

who,

ation

in te

line

again

this

temp

rati

Q_{10}.

must

whic

as a

abov

lim

to say, the thyroid counts of the rats that were substituted in succession maintained the same slope as the average counts of the I^{131} injected litter with which they had been associated for forty-eight hours.

Heart-Rate Temperature Relationships

The relationship between the intraperitoneal temperature and heart rate of infant rats used in this study is shown on Figure 3. It will be noted that this illustration is an Arrhenius plot in which the logarithm of the heart rate is plotted against the reciprocal of the intraperitoneal absolute temperature multiplied by one thousand.

The Arrhenius equation is named after the originator who, in 1889, proposed it as an explanation for the acceleration in the rate of thermochemical reactions with a rise in temperature. For the equation to be valid a straight line must result when the logarithm of activity is plotted against the reciprocal of the absolute temperature. From this line one can compare the rate of activity at a given temperature to the rate at a temperature 10°C lower. This ratio is called the temperature coefficient, and is designated Q_{10}. Two limits to the Arrhenius plot in this experiment must be noted: (1) a lower limit of 289 K (16°C) below which the heart approaches a complete cessation of the beat as a result of cold, and (2) an upper limit of 312 K (29°C) above which the heart rapidly approaches its upper rate limit.

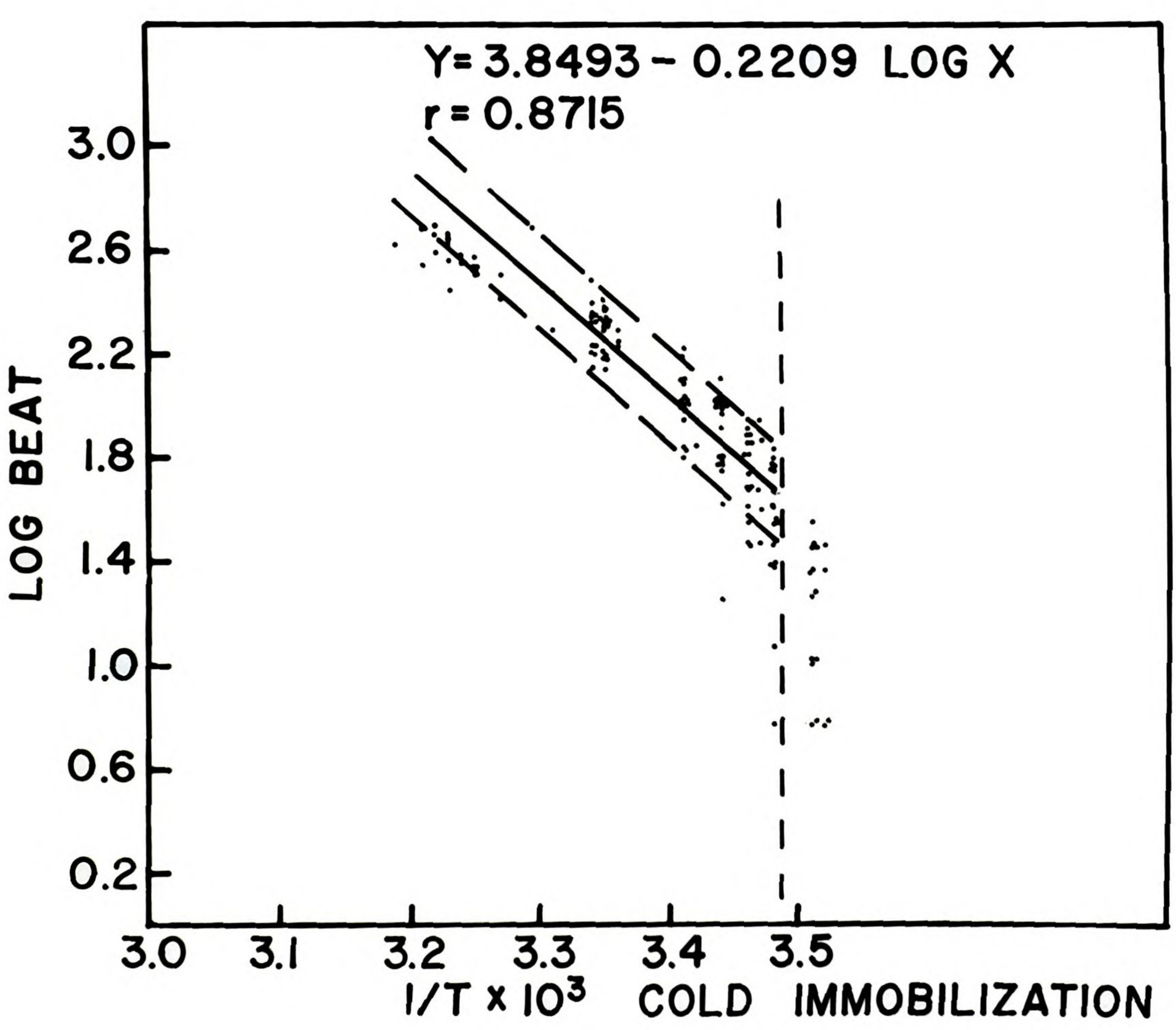

Figure 3. Neonatal heart-rate temperature relationship conforms to the Arrhenius equation.

(1)

Arr

plo

x l

was

wa

an

ra

pe

th

of

qu

in

r

a

(

D

b

s

t

V

The raw data were plotted in several different ways: (1) Arithmetic, (2) Log-linear, (3) Log-Log, and (4) the Arrhenius equation where the logarithm of the beat was plotted against the reciprocal of the absolute temperature x 10^3. The only way in which a straight-line relationship was obtained, was by application of the Arrhenius plot.

In this experiment the Q_{10} of the neonatal heart was found to be 3.05. Age and weight of the experimental animals had no influence on the reduction of the heart rate in response to cooling.

For this reason an attempt was made to recalculate pertinent published experiments to determine whether or not the results agree with those of the present work. The data of six investigators were replotted in accordance with requisites for the Arrhenius equation, Appendix p. 49.

As cited from the review of literature, numerous investigators have reported relationships between heart rate and temperature. In only two cases, were the temperature and heart rate data described by the Arrhenius equation (Michael and Menaker, 1963, and Harary and Farley, 1960). In another case (Lyman and Blinks, 1959), there seemed to be some confusion as to the criteria for an Arrhenius plot.

It was noted that all of the infant rat hearts stopped between 11.5° and 16°C, and that the period of time the hearts could remain stopped, with survival after rewarming, was inversely proportional to the age of the rat. Rats between seventeen and twenty days of age did not survive

fo

co

ra

mi

for longer than one hour after rewarming if the heart stopped completely. This was attributed to CNS damage since the rats were quite uncoordinated and exhibited primitive swimming motions in their attempts at locomotion.

va

ra

po

te

IV

m

n

s

t

a

DISCUSSION

Thyroid Function of the Neonatal Rat

The ages of the rats in this experiment were highly variable in relation to their weights. Group I represented rats from the day of birth to between the ninth to twelfth post natal day. Group II ranged in age from nine to nineteen days, Group III were twenty-nine day males, and Group IV rats were males which were sixty-days old.

It was noted that I^{131} injections of pregnant rats must be made within three days of parturition or they were not effective in labeling the fetal thyroids. This is consistent with published tables which state that the fetal thyroid gland becomes functional for both iodide uptake and hormonal release on the eighteenth to nineteenth day of gestation (Gorbman, 1958).

As is shown in Figure 1, the TSR of neonatal rats is quite low until the rat weighs approximately 22 gm. At this time, it is abruptly increased. This increase continues as a straight-line function of log weight, at least until the rat weighs about 250 gm and is about sixty days of age. Figure 2 shows that the neonatal rat thyroid contains relatively little iodine until the rat weighs about 22 gm. It then increases its iodine content as a straight-line function of log weight for the remainder of the

experimental period. It would be interesting to determine the physiological mechanisms that trigger these sudden changes.

The I^{131} per cent dose uptake (U) for newborn rats could not be measured since they obtained their I^{131} from a preparturition injection of the mother. The times of uptake for these rats are quite variable. This is probably due to the undigested milk from their first feeding after birth and before they could be transferred to an untagged lactating rat. The degree of individual variability is probably due to the time of birth in relation to the time of transferral.

The times to maximal I^{131} uptake by infants which were injected on the day of birth varied from four to six days with most of them reaching maximum uptake in five days. For Group II, however, the maximal uptake took four days and had values of seven to nineteen per cent. This is the point at which thyroid iodine uptake by the gland, as well as hormone release, is greatly accelerated.

It is of interest to note that the release rates as represented by the K_4' and K_4 values are approximately the same for all groups when each group is considered by itself. Apparently, the rat, as it attains mass and surface area, increases the total amount of iodine in the gland, thereby increasing its secretion of thyroid hormone with little or no change in output rate. This is one reason for the utilization of the direct output method to determine the

neonatal TSR, since there is a direct determination of total thyroid iodine as a part of the procedure. As has been shown by the data, neonatal rats, upon reaching a body weight of 22 gm abruptly alter their iodide trapping mechanism and there is no way, other than a total thyroidal iodine determination, to discover when this phenomenon occurs.

It has been mentioned in the literature survey (Gorbman, 1952) that there is an increased I^{131} uptake by the bovine fetus near term. Marks et al (1960), states that the PBI of newborn infants rose from birth to day 4 or 5 and then slowly fell over the first year of life to levels normal for older children and adults. Neonatal pigs have also been reported to have high neonatal thyroid activities on the basis of injected thyroxine I^{131} degradation values (Slebodzinski, 1965). On the other hand, Myant (1963) states that the fetal rat thyroid turnover is much slower than that of the adult animal. The present experiments show that this is also the situation in rats weighing up to twenty-two grams. The rat, at birth, is less mature than other animals on which work has been done (bovine, swine, and human infants). It can be speculated that the thyroid secretion of the fetal and very young neonatal rat, even though small, has a definite purpose. It is known that the thyroid hormone is specifically responsible for the differentiation of cerebellar and cerebral cortical tissue, the development of the thermoregulatory mechanism, and conditioning behavior (Hamburgh, 1964). It has been stated

that, in rats of eight to ten days of age, chemical thermoregulation augments the muscular movements which up to that time served as the sole mechanism of thermoregulation (Alimukhamedov, 1962). If the thyroid secretion is concerned in the development of this chemical thermoregulating mechanism, then the data of these experiments lend weight to this hypothesis.

The iodine cycle between the infant, mother, and back to the infant has an effect on the determination of TSR of the infant. Iodine in the mother's milk acts to reduce the infant thyroidal release rate. Since the infant nurses continually, this flattens the output slope and gives an underestimation of K_4' and K_4 values, with a corresponding underestimation of TSR with the direct output method. However, since the Group I and Group II rats nursed throughout the experimental period, this value would be constant for different age and weight groups and comparative secretion rates could be, and were, determined.

An attempt was made to apply the substitution method Reineke and Singh, 1955) for neonatal TSR determination but consistent data were not obtained. Whether this was due to a low level of function of the hypothalamo-pituitary-thyroid axis or a lack of sufficiently sensitive experimental technique cannot be stated.

Heart Rate Temperature Relationships

The individual rats in this study showed much variation in the reduction of heart rate as the body cooled. This

is in agreement with the work of Fairfield (1948), Adolph (1950), Lipp and Folk (1960), and Baker and Horvath (1964).

The heart rate of the neonatal rat to twenty-days of age conforms to the Arrhenius equation within temperature limits of 16° - 30°C. The data of six original investigators was replotted by this author to show heart rate temperature conformity, by both poikilotherms and homeotherms, with the Arrhenius equation. Possibly many more examples may be found that have this temperature-heart relationship. The correlation between the points on the graphs and the line drawn through them is admittedly not the best. It is very difficult to obtain accurate points from a published curve for several reasons: (1) Published curves have a minimal number of reference points of the ordinate and abcissa, and (2) The curves have usually been photographed and reduced in size. In this process the scale to which they were originally drawn is reduced necessitating a rough measurement for each point.

It can readily be seen that the heart rate Q_{10} can roughly divide the homeotherms from the poikilotherms, although there is some overlap with certain animals. Generally, in accordance with Table 3, homeotherms have a Q_{10} of 2.85 and above while poikilothermic animals are below 2.7.

It appears from the results of this study that the heart rate is more dependent on temperature than previously supposed. It is believed that the pacemaker tissue of the

heart is that tissue which can intracellularly induce depolarization. The means by which these tissues accomplish depolarization is not known, although recently Hecht (1965), has stated that most cardiac investigators agree on an ionic theory of excitation in vertebrates. This is based on the interplay of sodium, potassium, and chloride ions as intracellular current carriers, and on the cellular membrane with calcium ions as intermediates. The passage of the nerve impulse is also known to be related to ionic flux. Therefore, the initiation of the impulse, as well as its passage over the heart, is essentially chemical in nature. This apparently, is especially true of the atrial conduction of the impulse since no histological evidence has been introduced to show specific transmitting structures. Baker and Horvath (1964) in reporting on work done with swimming unanesthetized rats, stated that if the circulation of the limbs of the rats swimming in 20°C water was sufficiently reduced as a consequence of cold vasoconstriction, then a build-up of chemical by-products of muscular contraction should have increased the heart rate. The heart rate apparently was not affected. This could be interpreted to mean that the increase in heart rate in response to exercise either is temperature dependent, or that the effects of a cooling body temperature override other reflex actions. Ebert *et al*, (1964) state that in their experiments, hypothermia directly slowed the heart but no reflex effects were noted. It seems that further work should be done to explore this problem.

In planning both phases of these experiments it seemed likely that some correlation would be found between the level of thyroid function in the neonatal rat and the responses of heart-rate to body temperature with increasing age and size. While interesting changes were observed in both of these functions, no clear-cut relationship between them has been found.

SUMMARY AND CONCLUSIONS

Thyroid Function in the Neonatal Rat

With these experiments, it was found that the neonatal rat has a low level of thyroid function at birth, and this condition persists until the animal weighs 22 gms. At this time there is an abrupt increase in the thyroxine secretion rate (TSR) and thyroid iodine content, both of which, from that time on, have a straight-line relationship with the logarithm of body weight. This rate of increase is maintained at least until a weight of 244 grams is reached and an age of about sixty days.

The existence of a mother infant iodine cycle was confirmed and it was found that approximately 9.36% of the I^{131} in the average thyroid gland of the individual tagged litter mates, was transferred to an untagged rat of the same age within 48 hours. This rat received this I^{131} from his litter mates whose urine was ingested (at least in part) by the mother and partitioned between her thyroid and mammary glands. The portion of I^{131} which was taken up by the mammary tissue was subsequently released to the infants via the milk. The number of rats in the litter, their age, and weight had no influence on the amount of the cycled iodine.

The neonatal heart rate in relation to intraperitoneal temperatures was studied. The data show it to be best described by the Arrhenius equation within temperature limits of 16° and 30°C. The published work of six other investigators was replotted by the author and several different species of animals (both poikilothermic and homeothermic) were shown to have the same heart rate temperature relationship. The Q_{10} of the neonatal rat heart was also calculated, and it has a value of 3.05. It was also found that the age of the rat is inversely proportional to survival if the heart is stopped by cold. Mass and age do not affect the Arrhenius plot for infants 1 - 20 days of age.

It is possible with the data shown in this paper and certain publications of others, to speculate that many more animals may show this relationship. It may also mean that some of the current concepts of the heart-rate relationship to exercise may have to be re-evaluated.

Table 1. Neonatal thyroid function. A listing of rat weight, times of maximum uptake, release slopes (K_4' or K_4), thyroid iodine content, micrograms of daily thyroxine secretion rates.

Rat Wt.	U**	Time to Maximum Uptake	K_4' or K_4*	Micrograms Thyroid Iodine	Micrograms T_4 Secreted Daily
10.0	Mother injected	One day	K_4'	0.0788	0.2732	0.0510
10.2	"	Three days		0.1427	0.2500	0.0846
10.3	"	One day		0.1555	0.1656	0.0574
10.35	"	One day		0.1488	0.3150	0.1111
10.35	"	One day		0.1371	0.2101	0.0661
10.45	"	One day		0.1319	0.3800	0.1188
10.9	"	One day		0.1523	0.5450	0.1967
11.85	"	One day		0.1319	0.3102	0.0970
15.0	"	Four days		0.1144	0.4525	0.1227
15.2	"	Four days		0.1590	0.1313	0.4949
15.5	"	Two days		0.0861	0.1063	0.2169
15.5	"	Two days		0.1488	0.1550	0.0489
15.6	"	Six days		0.1627	0.3163	0.1220
15.9	"	Two days		0.1026	0.4282	0.1041
16.0	"	Four days		0.0969	0.1519	0.0348
17.8	"	Four days		0.1225	0.1538	0.0447
18.55	"	Four days		0.1627	0.2013	0.0776
19.0	"	Two days		0.1184	0.5825	0.1634
19.1	"	Two days		0.1344	0.1688	0.0526
Group II						
22.9	.017	Six days	K_4	0.1319	0.4500	0.1715
24.0	.018	Four days		0.1427	0.3325	0.1372
24.0	.0185	Four days		0.2204	0.6838	0.3572
24.7	.0155	Four days		0.1762	0.6625	0.2599
25.4	.0126	Four days		0.1310	0.0125	0.0039
25.7	.0195	Four days		0.1932	0.6275	0.2873
26.7	.013	Four days		0.1606	1.1350	0.4319
26.7	.030	Four days		0.2566	1.2110	0.7366
26.8	.012	Six days		0.1498	0.6000	0.2131
27.1	.0258	Four days		0.2302	0.5360	0.2924
27.2	.0125	Four days		0.1353	0.6088	0.1952
27.4	.0218	Four days		0.2184	1.4250	0.7379
27.4	.0175	Four days		0.1540	1.0738	0.2924
27.4	.0170	Four days		0.1917	0.4913	0.2232
27.8	.0170	Four days		0.1451	0.9550	0.3286
28.0	.0095	Four days		0.1758	0.1485	0.0619
28.2	.0093	Four days		0.1025	0.6300	0.1530
28.7	.0062	Four days		0.0403	0.9350	0.0377
29.0	.013	Four days		0.1621	0.6500	0.2497

Table 1. Continued.

Rat Wt.	U**	Time to Maximum Uptake	K'_4 or K_4*	Micrograms Thyroid Iodine	Micrograms T_4 Secreted Daily
29.1	.019	Four days	0.2006	2.7938	0.3920
29.4	.0074	Four days	0.0804	0.7400	0.1410
29.4	.012	Four days	0.1418	0.8300	0.2790
29.8	.012	Four days	0.1301	0.6350	0.1958
30.0	.0115	Four days	0.1338	0.5525	0.1752
30.4	.0175	Four days	0.1365	1.8550	0.6002
31.3	.0165	Four days	0.1395	1.8875	0.3824
Group III					
60.8	.0265	Two days	0.1894	2.5532	1.0977
61.0	.0370	Two days	0.1774	3.8250	1.5401
63.0	.0220	Two days	0.1555	2.7344	0.9654
63.1	.0305	Two days	0.1604	3.4000	1.2379
64.9	.0350	Two days	0.2018	3.0063	1.3772
65.6	.0285	Two days	0.2062	2.5782	1.2066
66.1	.0340	Two days	0.1541	2.7219	0.9523
67.3	.0300	Two days	0.1852	2.6063	1.0956
Group IV					
152.4	0.680	Two days	0.1415	6.4625	2.1669
155.3	0.640	Two days	0.1287	5.9875	1.8256
162.3	0.725	Two days	0.1016	9.4813	2.2837
172.8	0.670	Two days	0.2211	4.2250	1.9925
175.6	0.800	Two days	0.1287	9.3125	2.8400
195.2	0.980	Two days	0.1763	4.2250	1.7655
238.5	0.780	Two days	0.1404	6.1500	2.0461
243.5	0.670	Two days	0.2211	4.1000	2.1482

*from semi-log slope.

**calculated theoretical value from intercept of zero time from true release slope.

Table 2. Mother infant iodine cycle average individual per cent dose, number of labeled rats in the litter, foster per cent counts from labeled litter, age of litter and substitute, days counted.

Litter % dose Indiv. Ave.	No. Rats In Litt.	Foster % Indiv. Ave.	Age	Litter % dose Indiv. Ave.	No. Rats In Litter	Foster % Indiv. Ave.	Age	Litter % dose Indiv. Ave.	No. Rats In Litt.	Foster % Indiv. Ave.	Age	Litter % dose Indiv. Ave.	No. Rats In Litt.	Foster % Indiv. Ave.	Age
11.0	9	9.64	4	6.72	8	10.71	6	4.60	5	12.64	8	3.69	4	4.18	10
7.12	4	5.84	7												
6.18	8	12.78	8	4.19	8	9.79	10	2.55	5	9.43	12				
7.39	8	6.26	9					3.57	7	7.58	13	2.91	7	7.55	15
5.39	8	10.4	11	4.15	7	6.03	13	2.82	6	14.18	15	2.66	5	13.38	17

1st Count Day — Second Count Day — Third Count Day — Fourth Count Day

$\bar{x}$ = 9.358

Standard deviation = 3.05. Standard error 0.2033.

Table 3. Heart-rate temperature relationships, animals whose heart-rate response to cold fits the Arrhenius equation, temperature ranges for the application of the Arrhenius plot, Q_{10}, names of original investigators whose data was replotted by the present author.

Animal	Type	Q_{10}	Temp. Range	Original Investigator
*Dog (Canis sp.)	Homeotherm	3.63	20° - 30°C	Biörck & Johansson, 1955
*Rabbit				
adult intact	Homeotherm	3.10	16° - 30°C	Covino & Beavers, 1958
adult isolated	"	3.02	16° - 30°C	
**Bat (Myotis lucifugus)	"			
adult isolated		3.5	-1.0 - 25°C	Michael & Menaker, 1963
*Rat (Rattus norvegicus)	"			
adult intact		4.23	16° - 30°C	Adolph, 1950
*adult swimming	"	2.80	20° - 30°C	Baker & Horvath, 1964
**Isolated heart cells	?	"about" 3.0	(didn't say)	Harary & Farley, 1960
*infant	Heterothermic	2.86	16° - 30°C	Fairfield, 1948
*infant	"	3.05	16° - 30°C	Beltz, (present study)
*Turtle (Pseudemys scripta)	Poikilotherm	2.58	20° - 30°C	Hutton et al, 1960
*Frog (Xenopus laevis)	Poikilotherm	1.55	10° - 30°C	Biörok & Johansson, 1955
*Fish (Pleuronectes flesus L.)	Poikilotherm	2.71	10° - 20°C	Biörck & Johansson, 1955

*Replotted data by present author.

**Arrhenius plot by original author.

A comparison of K values with K'_4 values

$$K = \frac{0.693}{T_{1/2}} \qquad K'_4 = 1 - e^{-x}$$

One-day comparison of values of release for different slopes (I, II, III, IV)

K = 0.693 or 69.3% of the total value

K'_4 = 0.49993 or 49.993% of the total value

K = 0.5290 or 52.90% of the total value

K'_4 = 0.4993 or 49.93% of the total value

K = 0.3465 or 34.65% of the total value

K'_4 = 0.2928 or 29.28% of the total value

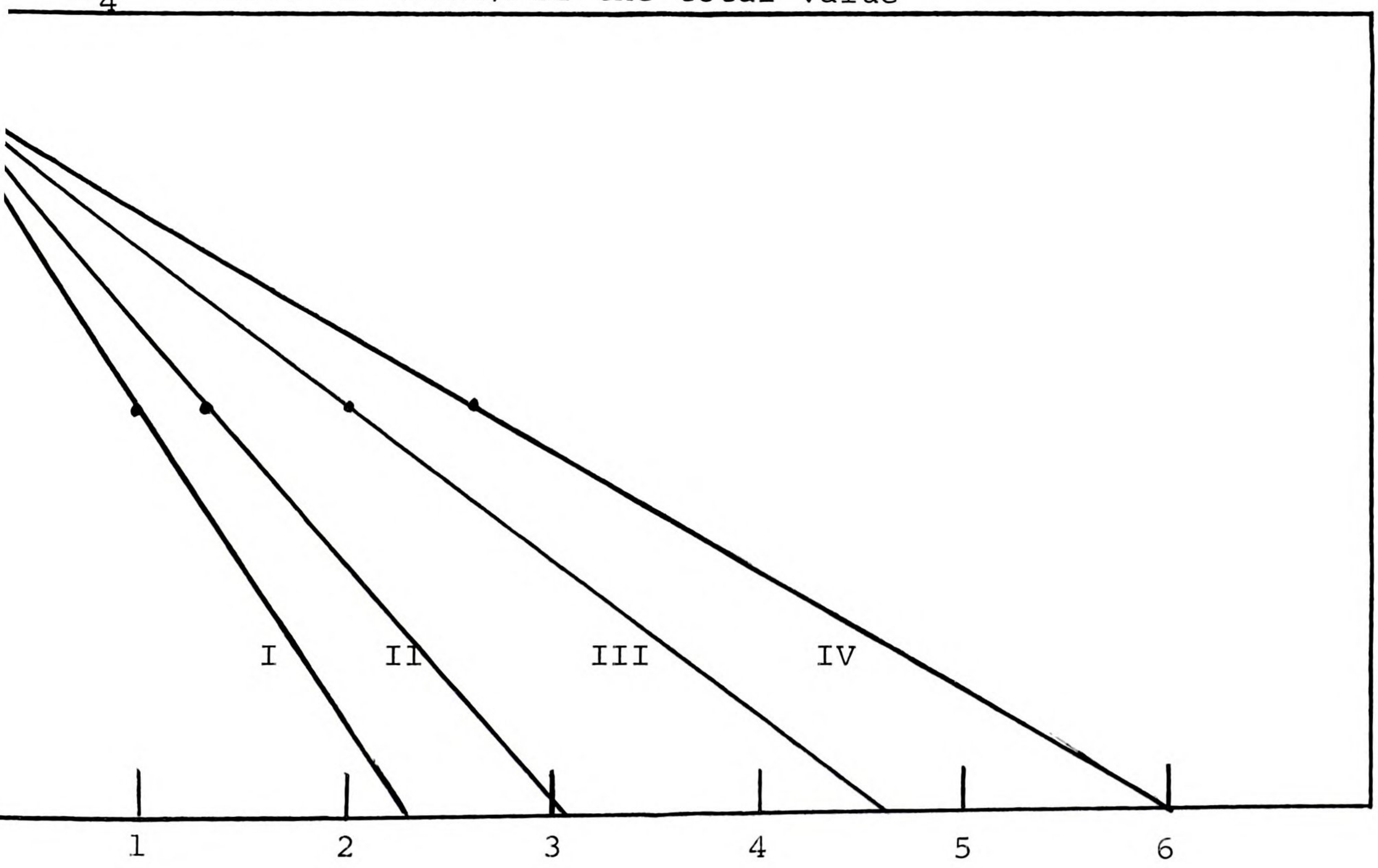

K = 0.26653 or 26.653% of the total value

K'_4 = 0.23395 or 23.395% of the total value

Plot out the supposedly identical values (K and K'_4) and compare. Read Materials and Methods for an explanation of how to convert K to K'_4.

Equations for the calculation of a linear regression line from a graphed logrithmic-linear plot.

y = linear values

x = logarithmic values

N = number of subjects or observations

y = a + blog x ----- the values of a and b are determined by the following simultaneous equations:

$$E\ (y) = Na + b\ E\ (\log x)$$

$$E\ (\log xy) = a\ E\ (\log x) + b\ E\ (\log x^2)$$

The Coefficient of Correlation is calculated by the following equation:

$$r^2 = \frac{a\ E\ (y) + b\ E\ (\log xy) - N\ y^2}{E\ (y^2) - N\ y^2}$$

Then -

$$\text{The Coefficient of Correlation } (r) = \sqrt{r^2}$$

$$\text{The Standard of } y^2 = \frac{E\ (y^2) - a\ E\ (y) - [b\ E\ (\log xy)]}{N - 2}$$

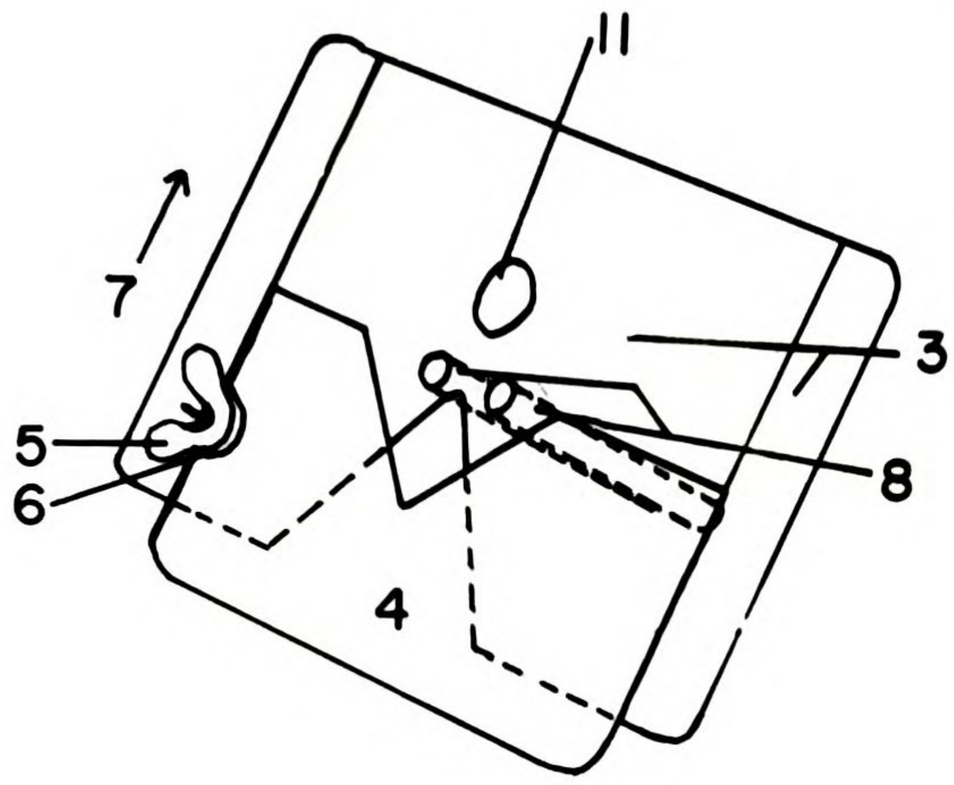

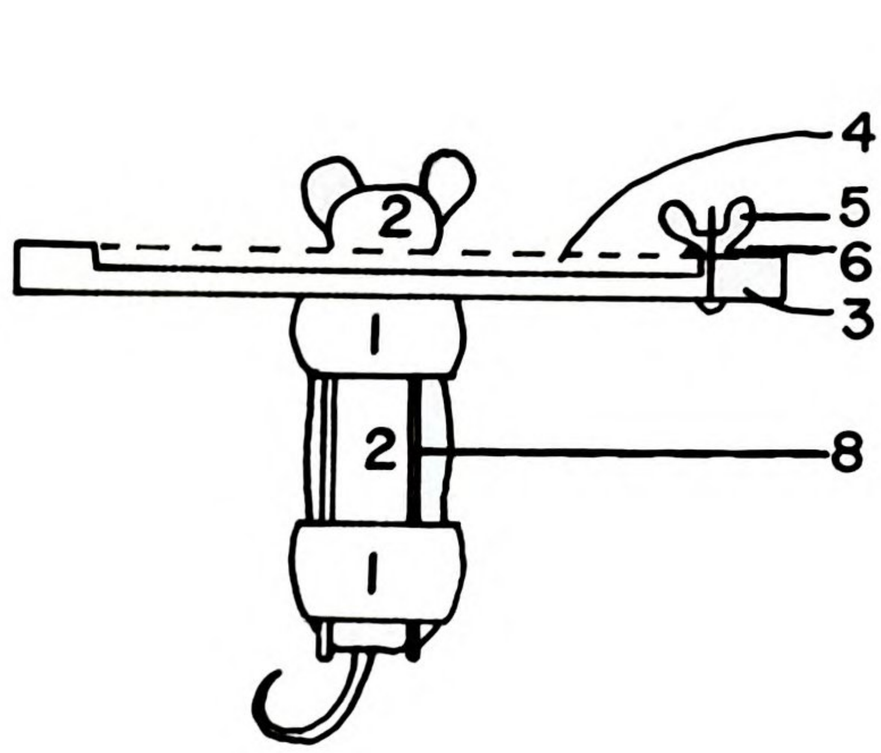

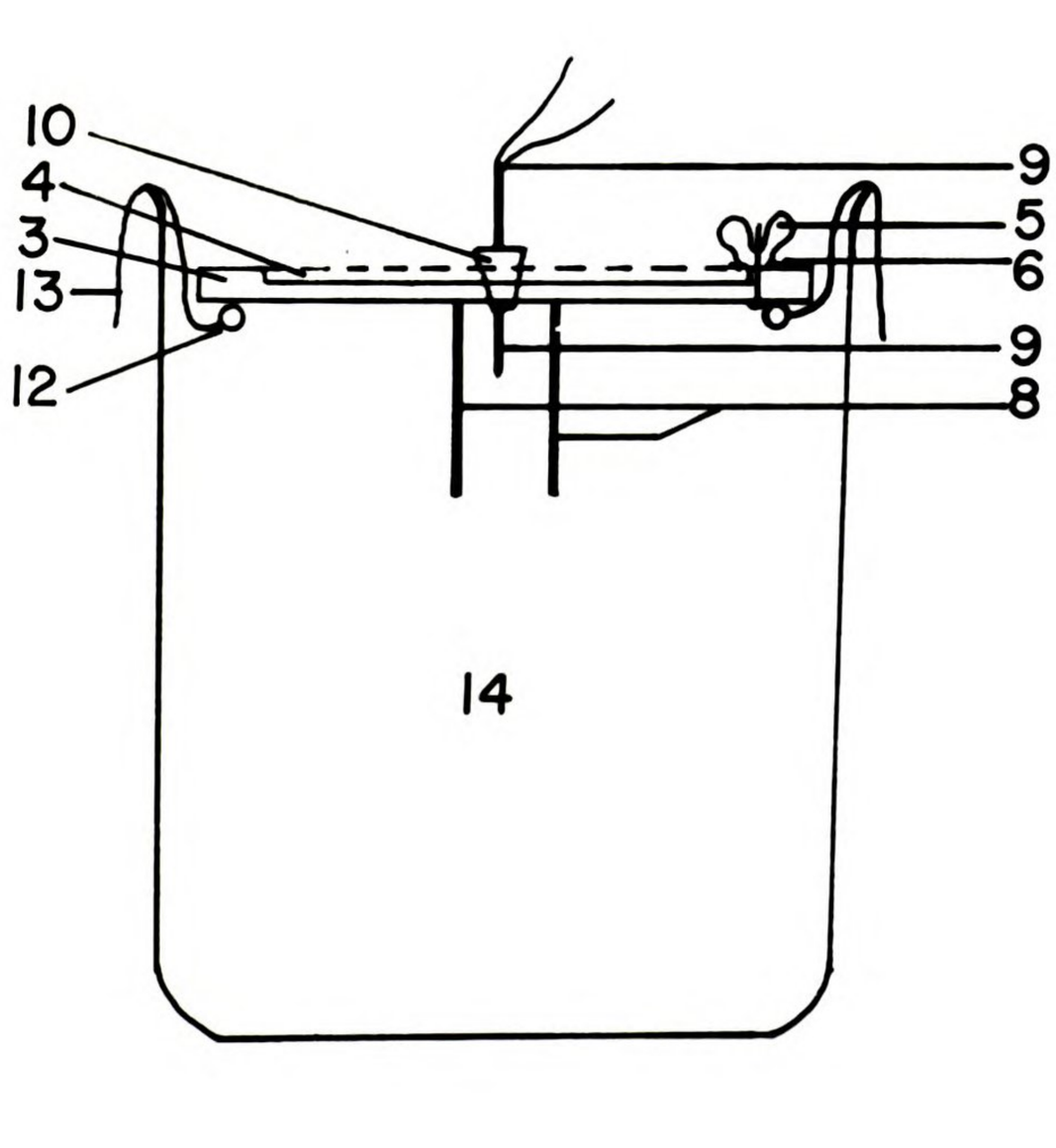

1. MASKING TAPE
2. RAT BODY
3. PLATE BASE
4. SLIDE
5. SLIDE WING NUT (FOR TIGHTENING SLIDE)
6. WASHER
7. DIRECTION RAT FACES
8. ANCHORING POSTS
9. INTRAABDOMINAL THERMISTOR PROBE
10. CORK HOLDING PROBE
11. HOLE FOR CORK
12. SUPPORTING RODS
13. WIRE HOLDING SUPPORTING RODS
14. WATER AND ICE TO BASE OF PLATE

Immobilization apparatus.

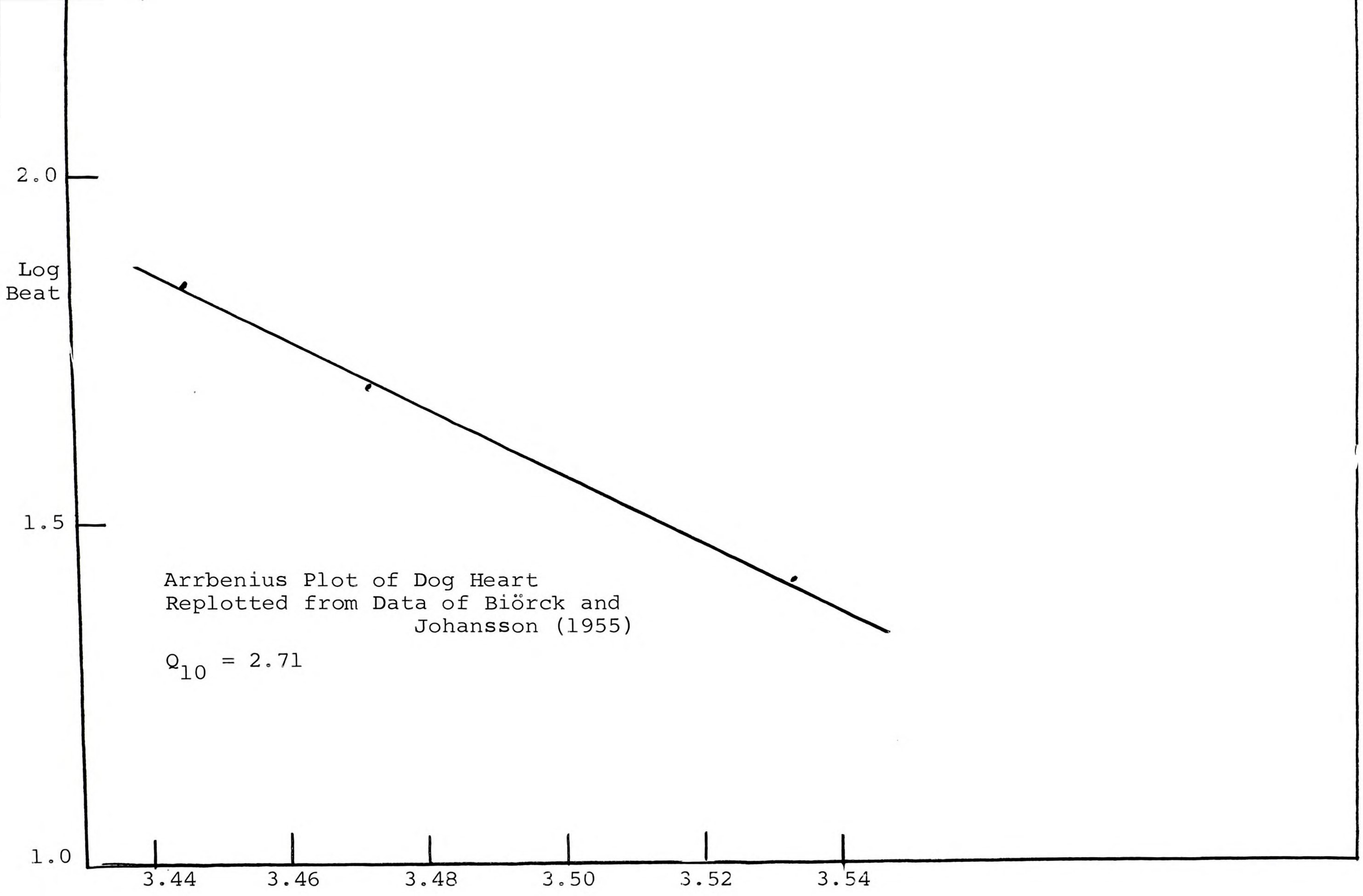

Arrbenius Plot of Dog Heart
Replotted from Data of Biörck and
Johansson (1955)

$Q_{10} = 2.71$

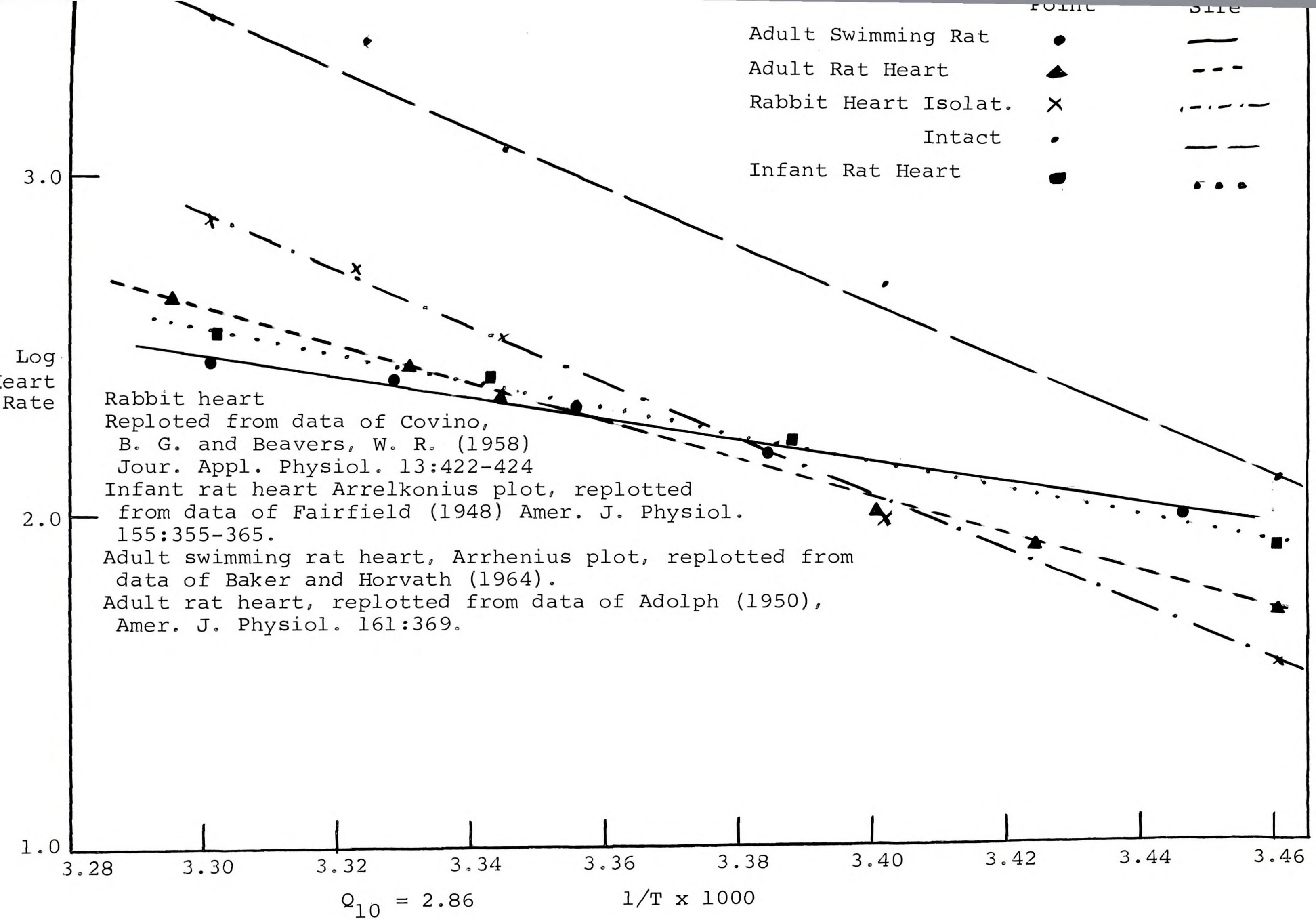

Rabbit heart
Reploted from data of Covino,
B. G. and Beavers, W. R. (1958)
Jour. Appl. Physiol. 13:422-424
Infant rat heart Arrelkonius plot, replotted
from data of Fairfield (1948) Amer. J. Physiol.
155:355-365.
Adult swimming rat heart, Arrhenius plot, replotted from
data of Baker and Horvath (1964).
Adult rat heart, replotted from data of Adolph (1950),
Amer. J. Physiol. 161:369.

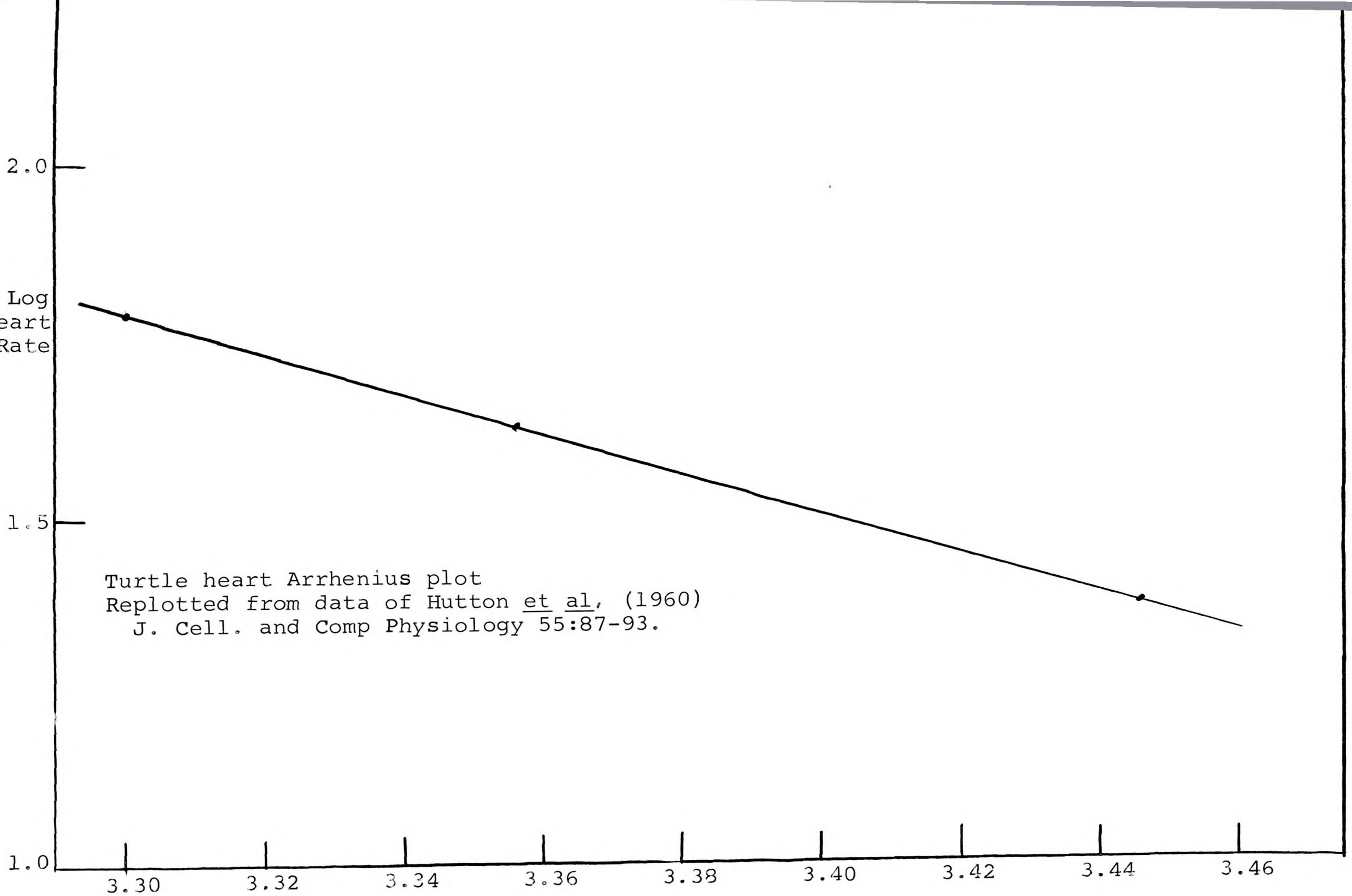

Turtle heart Arrhenius plot
Replotted from data of Hutton et al, (1960)
J. Cell. and Comp Physiology 55:87-93.

$Q_{10} = 2.58 \quad 1/T \times 1000$

LITERATURE CITED

Adolph, E. F., 1950. Heat production in hypothermia. Amer. J. Physiol. 161:369.

Alimukhamedov, A. A., 1962. Phases of thermo-regulation development in early ontogenesis in rodents. Voprosy ekologii (Problems of ecology) Vysshaya Shkola: Moscow 6:10-11. Referat.Zhur., Biol. 1962 No. 201275 (from Biol. Abs.).

Baker, Mary Ann, and Steven M. Horvath. 1964. Heart rate and rectal temperature of swimming rats. Amer. J. Physiol. 270:1073-1076.

Barker, S. B., Humphrey, M. J., and Soley, M. H., 1951. The chemical determination of protein-bound iodine. Jour. Clin. Invest. 30:55-62.

Bhatnager, R. K., 1963. Interactions of Reserpine, Serotonin and Related drugs, as indicated by energy metabolism, thyroid and adrenal function of the rat. Master's Thesis. Michigan State University.

Biörck, Gunnar, and Bengt Johansson, 1955. Comparative studies on temperature effects on the ECG in some vertebrates. Acta Physiologica Scandinavica, 34:257-272.

Brody, E. B., 1943. Metabolism and growth rate of rats. J. Nutrition 24:461-468.

Brownell, S. Z. 1951. Analysis of techniques for the determination of thyroid function with radioiodine. J. Clin. Endocrinology 11:1095-1105.

Bryce-Smith, R., H. G. Epstein, and P. Glees. 1960. Physiological studies during hypothermia on monkeys. Jour. Appl. Physiol. 15:440-444.

Bullard, Robt. W. 1959. Cardiac output of the hypothermic rat. Amer. J. Physiol. 196:415-419.

Capek, K., and J. Jelinek. 1955. The development of the control of water metabolism. I. The excretion of urine in young rats. Physiol. Bohemoslov. 5:76.

Covino, Benjamin G., and W. R. Beavers. 1958. Effect of cold on the isolated, intact rabbit heart. Jour. Appl. Physiol. 13:422-424.

Dahlen, R. W., 1964. Some effects of hypothermia on the cardiovascular system and ECG of cats. Proc. Soc. Expl. Biol. and Med. 115:1-4.

Dawson, Wm. R., and George A. Bartholomew. 1958. Effects of temperature on Dipsosaurus (desert iguana). Physiol. Zool. 31:100-111.

Deleze, J. 1960. Possible reasons for drop of resting potential of mammalian heart preparations during hypothermia. Circulation Research, 8:553-557.

Draper, M. H., and M. Mya-Tu. 1959. A comparison of conduction velocity in cardiac tissues of various mammals. Quar. Jour. Expl. Physiology 44:91-109.

Ebert, Paula A., W. Gerald Austin, L. J. Greenfield, H. W. Bender, and Andrew G. Morrow. 1964. Amer. J. Med. Electron. 3:162-168.

Feldman, Joseph D. 1960. Iodine deficiency in newborn rats. Amer. Jour. Physiol. 199:1081-1083.

Fisher, D. A., and T. H. Oddie. 1963. Thyroxine secretion rate during infancy: Effect of estrogen. J. Clin. Endocrinology and Metabolism 23:811-819.

Giese, Arthur C. 1962. Cell Physiology. W. B. Saunders Co., Philadelphia.

Gorbman, A., 1958. Thyroid development. In: Comparative Endocrinology, A. Gorbman (ed.), John Wiley & Sons, New York.

_____., Evans, H., 1943. Beginning of function in the thyroid of the fetal rat. Endocrinology 32:113-115.

_____., Lissitsky, S., O. Michel, and J. Roche. 1952. Metabolism of radioiodine by the near term bovine fetus. Endocrinology 51:546-561.

_____., Allyn Waterman, C. M. Barnes, and L. K. Bustad. 1957. Thyroidal function in fetal and pregnant sheep given chronic low level dosages of I^{131}. Endocrinology 60:565-566.

Gulick, Addison. 1937. Development of temperature control in the intact rat. Amer. J. Physiol. 119:322.

Hall, M. 1832. Phil. Trans. B (1832) 335 (as referred to by Löfgren (1960).

Hamburgh, Max, Edward Lynn, and Earl P. Weiss. 1964. Analysis of the influence of thyroid hormone on prenatal and postnatal maturation of the rat. Anat. Record 150:147-162.

_____., Edna Sobel, Robert Koblin, Alan Rinestone. 1962. Passage of thyroid hormone across the placenta in intact hypophysectomized rats. Anat. Record 144:219-228.

Hamilton, James B., Melvin Dresback, and Ruth S. Hamilton. 1937. Cardiac changes during progressive hypothermia. Amer. J. of Physiol. 161:369.

Hannon, John P. 1958. Effect of temperature on the heart rate, electro-cardiogram, and certain myocardial oxidations of the rat. Circ. Res. 6:771-778.

Harary, Isaac, and Barbara Farley. 1960. In vitro organization of single beating rat heart cells into beating fibers. Science 132:1839-1840.

Hecht, Hans H. 1965. Comparative physiology and morphological aspects of pacemaker tissues. Ann. N. Y. Acad. Sci. 127:113-116.

Heggestad, C B., and L. J. Wells. 1954. Lack of compensatory changes in the developing thyroid in fetal rats from hypophysectiomized mothers. Anat. Record 118:390-398.

Hill, R. M., 1947. The control of body temperature in white rats. Amer. Jour. Physiol. 149:650-656.

Hirvonen, Leo. 1955. Temperature range of spontaneous activity of isolated hedgehog, hamster, and rat auricle. Acta Physiologica Scandinavica 36:38-46.

Hollander, Phillip B., and J. Leyden Webb. 1955. Cellular membrane potentials and contractility of normal rat atrium and the effects of temperature, tension, and stimulus frequency. Cir. Research 3:604-612.

Hutton, Kenneth E., Don R. Boyer, James C. Williams, and Peter M. Campbell. 1960. Metabolic and heart rates in turtles. Jour. Cell. and Comp. Physiol. 55:87-93.

Hwang, Ung Kee, and Lemen J. Wells. 1959. Hypophysis-thyroid system in the fetal rat: Thyroid after hypophyseoprivia, thyroxine, triiodothyronine, thyrotropin, and growth hormone. Anat. Record 134:125-141.

Jacobson, Antone G., and Robert L. Brent. 1959. Radioiodine concentration by the fetal mouse thyroid. Endocrinology 65:408-416.

Lepeshkin, Eugene. 1951. Modern Electrophysiology. Vol. I. Williams and Wilkins Co., Baltimore.

Lindsay, H. A., Kullman, V. S. 1966. Pentobarbitol Sodium: variation in toxicity. Science 151:576-577.

Lipp, James A., and G. Edgar Folk Jr. 1960. Cardiac response to cold of two species of mammalian hibernators. Ecology 41:377-378.

Lister, John W., Brian F. Hoffman, and Frederick Kavaler. 1964. Reversible cold block of the specialized cardiac tissues of the unanesthetized dog. Science 145:723-725.

Löfgren, L., T. Pettersson, and G. Hjelmman. 1960. The effect of extreme cooling followed by rewarming on the cardiac rate in some test animals. Cardiologica 37:85-98.

Lyman, Charles P., and Doris Blinks. 1959. The effects of temperature on the isolated hearts of closely related hibernators and nonhibernators. Jour. Cell. Comp. Physiol. 54:53-64.

Marks, J., J. Wolfson, and R. Klein. 1960. Neonatal thyroid function. Amer. Journ. Dis. Children 100:549.

Michael, C. R. and M. Menaker. 1963. Effect of temperature on the isolated heart of the bat (Myotis lucifugus). Jour. Cell. Comp. Physiol. 62:355-358.

Middlesworth, L. van. 1954. Radioactive iodide uptake of newborn infants. Amer. Jour. Dis. Children 88: 439-442.

Moore, C. R. 1950. The role of the fetal endocrine glands in development. J. Clin Endocrinology 10:942-985.

Moore, E. Niel. 1965. Atrioventricular transmission in newborn calves. Ann. N.Y. Acad. Sci., 727:113-116.

Myant, N. B. 1958. The passage of thyroxine and triiodothyronine from mother to foetus in pregnant rabbits, with a note on the concentration of protein-bound iodine in foetal serum. Jour. Physiol. 142:329-342.

_____. 1963. Tarczyca a roswoj ploda (the thyroid and fetal development [Lampetra planeri]. Postepy Biochemii 9:19-34. (English summary in Biol. Abs.)

Nardone, Roland M. 1955a. Electrocardiogram of the Arctic Ground squirrel during hibernation and hypothermia. Amer. J. Physiol. 182:364-368.

_____, Charles G. Wilker, and X. J. Musacchia. 1955b. Electrocardiograms of the opossum during exposure to cold. Amer. J. of Physiol. 181:352-356.

Nataf, B. M. and I. L. Chaikoff. 1964. Effect of injected thyrotropic hormone on *in vitro* uptake and metabolism of I^{131} by thyroid glands of fetal and newborn rats. Endocrinology 75:547-553.

Phillips, J. B., and A. S. Gordon. 1954. A study of the pituitary-thyroid relations in the 1- to 15-day-old rat. Anat. Record 120:702-703.

_____. 1955. A study of pituitary-thyroid relations in immature rats. Anat. Record 123:487-508.

Pitt-Rivers, R., and Rall, J. E. 1961. Radioiodine equilibrium studies of thyroid and blood. Endocrinology 68:308-316.

Poczopko, Piotr. 1961. A continuation to the studies on changes of energy metabolism during prenatal development. I. Development of mechanisms of body temperature regulation in rats. J. Cell. Comp. Physiol. 57:175-184.

Reineke, E. P., and Singh, O. N. 1955. Estimation of thyroid hormone secretion rate of intact rat. Proc. Soc. Expl. Biol. and Med. 88:203-207.

Richards, A. G., E. Simonsen, and M. B. Visscher. 1953. Electrocardiogram and phonogram of adult and newborn mice in normal conditions and under the effect of cooling, hypoxia, and potassium. Amer. J. Physiol. 174:293-298.

Samel, M., and Caputa, A. 1965. The role of the mother in I^{131} metabolism of suckling and weanling rats. Canad. J. Physiol. and Pharmacol. 43:431-436.

Sandell, E. B., Kolthoff, I. M. 1944. Mikrochem. acta., 1:9 Cited by Salter, W. T., and McKay, E. A. Iodine in blood and thyroid of man and small animals. Endocrinology 35:380-390.

Slebodzinski, A. 1965. Physiological significance of thyroxine-binding globulin capacity and the daily utilization of thyroxine in the newborn pig. Jour. Endocrinology 32:65-75.

Torres, Joseph C., Rachelle Warschaw, and Evangelos T. Angelakos. 1962. Influence of hypothermia on atrial rhymicity and excitability. Circulation 26:797.

Van Harreveld, A., and Eleanor Christensen. 1957. Effects of temperature on the membrane potential of mammalian nerve. Physiol. et Pharmacol. Neerland 6:597-607.

Walker, H. M., and Joseph Lev. 1953. Statistical Inference. Henry Holt and Company, New York, p. 447-449.

Waterman, Allyn J. 1958. Development of thyroid-pituitary systems in warm-blooded amniotes. In: Comparative Endocrinology. Gorbman, A. (ed.). John Wiley and Sons, New York, pp. 351-367.

_____., and A. Gorbman. 1956. Development of the thyroid gland of the rabbit. Jour. Expl. Zool. 132:509-538.

Wekstein, David R. 1965. Heart rates of the pre-weanling rat and its autonomic control. Amer. J. Physiol. 208:1259-1262.

Wiedmann, S. 1961. Membrane excitation in cardiac muscle. Circulation 24:499-505.

Wolff, J. 1951. Some factors that influence the release of iodine from the thyroid gland. Endocrinology 48:284.

Wright, Evan, and D. P. Sinclair. 1959. The concentration of radioiodine by the foetal thyroid gland and its relation to congenital goitre in sheep. New Zealand Jour. Agri. Res. 2:933-937.



L. A. BELTZ

PH.



PH.D
102
008
THS



MICHIGAN STATE UNIVERSITY LIBRARIES
3 1293 00056 7911
THESIS
2027 3394
LIBRARY
Michigan State
University

This is to certify that the

dissertation entitled

Suppression of Human T Lymphocyte Responses By Trypanosoma Cruzi

presented by

Lisa Ann Beltz

has been accepted towards fulfillment
of the requirements for

Ph.D. degree in Microbiology & Public Health

Major professor

Date July 21, 1988

MSU is an Affirmative Action/Equal Opportunity Institution

O-12771

MSU
LIBRARIES

RETURNING MATERIALS:
Place in book drop to remove this checkout from your record. FINES will be charged if book is returned after the date stamped below.

MAY 0 2 2010

APR 1 1 3 2002

SUPPRESSION OF HUMAN T LYMPHOCYTE RESPONSES BY *Trypanosoma cruzi*

By

Lisa Ann Beltz

A DISSERTATION

Submitted to
Michigan State University
in partial fulfillment of the requirements
for the degree of

DOCTOR OF PHILOSOPHY

Department of Microbiology and Public Health

1988

5/2 - 3872

ABSTRACT

SUPPRESSION OF HUMAN T LYMPHOCYTE RESPONSES BY Trypanosoma cruzi

BY

Lisa Ann Beltz

Trypanosoma cruzi is a parasitic protozoan of man which causes a debilitating and often fatal disease whose early stages are accompanied by decreased immune reactivity, the extent and underlying causes of which were unknown. In order to address these issues, we utilized an in vitro system in which T. cruzi trypomastigotes were co-cultured with normal human peripheral blood mononuclear cells (PBMC). In this system, T. cruzi reduced PBMC proliferation following stimulation by several mitogenic lectins or antibodies to either the T cell receptor complex or CD2. This reduction was not due to inadequate levels of nutrients or mitogens or to a loss of PBMC viability after co-culture with the parasite. T. cruzi also inhibited the growth of several but not all immortalized cell lines. While monocytes were not required for decreased PBMC responsiveness, parasite viability was necessary. Similar results were obtained when T. cruzi was separated from cells by a Millipore filter, demonstrating that suppression occurred via a factor secreted by the parasite. Maximal inhibition was noted only when T. cruzi was added to cultures within 24 hr of stimulation; therefore, early stages of activation were affected. Interleukin 1 and interleukin 2 (IL2) are products of stimulated monocytes and T cells, respectively, required early during T cell activation. Following optimal stimulation of human PBMC, production of these lymphokines and interferon-γ was unaffected by T. cruzi while the

parasite decreased IL2 and interferon-γ production by mouse splenocytes. IL2 restored proliferation of suppressed mouse but not human lymphocytes. The inability of human T cells to respond to endogenous or exogenous IL2 correlated with inhibited expression of IL2 receptors. Both the number of cells bearing IL2 receptors and receptor density were decreased by T. cruzi within 12 hr. Low and high affinity receptors were both affected. The expression of $T11_3$, an early activation marker, and the transferrin receptor, a growth factor receptor appearing late in activation, were also inhibited by T. cruzi while EA1, the earliest reported activation marker of T cells, was unaffected. Suppression of human T cell functions by T. cruzi is thus selective, with the key events lying not in altered lymphokine production but rather in decreased expression of crucial growth factor receptors.

Copyright by

Lisa Ann Beltz

1988

To my father, whose life has been my inspiraton,

and my mother, who helped me to transform my dreams into reality

ACKNOWLEDGMENTS

I would like to thank Dr. Felipe Kierszenbaum for his guidance and patience during the years I spent training in his laboratory. He believed in me and gave me encouragement and support when the inevitable problems arose.

I wish to thank the members of my guidance committee, Drs. Jeffrey Williams, Pamela Fraker, Walter Esselman, and John Wang, for their time and efforts on my behalf and for helping me to develop a broader view of science. Additionally, I wish to express my gratitude to two researchers with whom I was fortunate to collaborate, Dr. Gerald Sonnenfeld of the University of Louisville and Dr. Marcelo Sztein of George Washington University. A special word of thanks must be given to Dr. Sztein for not only reading the countless number of samples which I sent to him, but also for his sense of humor and his stimulating conversations.

I want to thank Drs. Julia Wirth, Alfred Ayala, and Mark Connelly for many interesting discussions and occasionally, for the use of their materials, but most importantly, for their camaraderie. I must also express my appreciation for the excellent technical assistance of Mr. James Kidder, Mr. William Morgan, Mrs. Patricia Hoops, and Mrs. Lisa Santangelo. The extent of their contribution becomes more apparent daily.

Another group of people to whom I give my warmest thanks are my blood donors who literally gave of themselves for this work.

Two of my associates deserve special mention. Drs. Fernando Villalta and Maria de Fatima Lima were instrumental in shaping me as a researcher. Their love and dedication to science were highly contagious. They, and their daughter Rachel, have been as a second family to me and the debt which I owe them can never be repaid.

I am deeply indebted as well to my family - my mother, my brother, and my grandparents - whose support never wavered. Without their love and encouragement, my goals would have been attainable but empty.

Finally, I give my deepest thanks to my God, Who is the ultimate source of all knowledge and strength. Through Him this work was done, and to Him, I now dedicate it.

TABLE OF CONTENTS

Page

List of Figures xi

List of Tables xii

Abbreviations xv

Introduction 1

I. Trypanosoma cruzi: an overview 2

II. Immunosuppression caused by T. cruzi 4

III. An overview of T cell stimulation 8

IV. Human interleukin 2 13

V. The interleukin 2 receptor (IL2R) 15

VI. Interferon-γ 20

VII. Research goals 22

VIII. References 25

Chapter 1

Suppression of Human Lymphocyte Responses by Trypanosoma cruzi 47

Abstract 48

Introduction 49

Materials and Methods 50

Results 55

Discussion 67

References 70

Chapter 2 Page

Trypanosoma cruzi Inhibits Interferon-γ Production by Mouse Spleen Cells but not Human Peripheral Blood Lymphocytes 72

Abstract 73

Introduction 75

Materials and Methods 77

Results 80

Discussion 86

References 90

Chapter 3

Novel Mechanism for *Trypanosoma cruzi*-induced Suppression of Human Lymphocytes: Inhibition of Interleukin 2 Receptor Expression 94

Abstract 95

Introduction 97

Materials and Methods 99

Results 102

Discussion 113

References 118

Chapter 4

Trypanosoma cruzi Decreases the Expression of Both the Interleukin 2 and Transferrin Receptors but not EA1, an Early Marker of Lymphocyte Activation 121

Abstract 122

Introduction 123

Materials and Methods 125

Results 128

Discussion 134

References 138

Chapter 5 Page

Suppression of the CD2 Pathway of Human T Cell Activation by *Trypanosoma cruzi* 142

Abstract 143

Introduction 144

Materials and Methods 146

Results 149

Discussion 152

References 156

Appendix I

Trypanosoma cruzi Mediates its Suppressive Effect via a Soluble Factor 159

Appendix II

Trypanosoma cruzi Inhibits the Growth of Several but not all Immortalized Cell Lines 168

Summary and Conclusions 175

LIST OF FIGURES

Page

Effects of T. cruzi on IL2R expression by human lymphocytes 105

LIST OF TABLES

Table		Page
	Chapter 1	
1	Suppression of Con A-induced PBMC responses by blood forms of *T. cruzi*	56
2	Suppression of PBMC responses induced with suboptimal, optimal and supraoptimal concentrations of Con A, PHA or PWM by blood forms of *T. cruzi*	57
3	Mitogenic capacity of Con A solutions before and after absorption with a suppressive concentration of *T. cruzi*	59
4	Ability of RPMI+5%FBS medium to support Con A-induced responses after incubation with *T. cruzi*	60
5	Effects of addition of *T. cruzi* at different times after PBMC stimulation with Con A	62
6	Reduced production of IL2 by PBMC incubated with *T. cruzi*	63
7	Failure of exogenous $IL2_{ph}$ to restore Con A responsiveness of PBMC	65
8	*T. cruzi* does not absorb or consume IL2	66
	Chapter 2	
1	*T. cruzi*-induced inhibition of IFN-τ production by PHA-stimulated mSC	81
2	Lack of restoration by exogenous IFN-τ of the capacity of PHA-stimulated mSC to proliferate after *T. cruzi*-induced suppression	83
3	Lack of effect of *T. cruzi* on IFN-τ production by hPBMC	85

Table Page

Chapter 3

T. cruzi-induced suppression of IL2R expression by lymphocytes 103

Effects of T. cruzi on the capacity of human lymphocytes to incorporate ^{3}H-thymidine and secrete IL2 in response to stimulation with PHA or anti-CD3 ... 106

Effects of T. cruzi on ^{3}H-thymidine incorporation and IL2R expression by human lymphocytes stimulated with PHA or anti-CD3 in the presence or absence of exogenous IL2 109

Restoration by exogenous IL2 of the capacity of mouse but not human lymphocyte responses (^{3}H-thymidine incorporation) suppressed by T. cruzi 111

IL1 production by human monocytes/macrophages in the presence or absence of T. cruzi 112

Chapter 4

The effect of T. cruzi on the expression of the IL2R by stimulated PBMC 129

The effect of T. cruzi on the binding of ^{125}I-IL2 to the IL2R under high affinity conditions 130

Lack of effect of T. cruzi on the expression of EA1 by stimulated PBMC 132

The effect of T. cruzi on the expression of the TfR by stimulated PBMC 133

Chapter 5

T. cruzi inhibits blastogenesis by both the T cell receptor and CD2 pathways 150

The effect of T. cruzi on IL2 production and IL2R expression after stimulation by either PHA or anti-CD2 151

Appendix I

T. cruzi suppresses human PBMC proliferation in the absence of direct contact with the cells 161

The suppressive affect of SSF is reversible 163

able

Page

Exposure of PBMC to the SSF did not inhibit IL2 production 165

IL2R expression is decreased by the T. cruzi SSF 166

Appendix II

T. cruzi decreases the growth of CTLL-2 and U937 cell lines 171

T. cruzi does not effect the ability of HUT 102B2 cells to proliferate or express IL2R 172

ABBREVIATIONS

Con A	Concanavalin A
cpm	counts per minute
EA1	early activation antigen 1
FBS	fetal bovine serum
IL1	interleukin 1
IL2	interleukin 2
$IL2_{ch}$	crude human interleukin 2
$IL2_{ph}$	purified human interleukin 2
IL2R	interleukin 2 receptor
$IL2_{rat}$	crude rat interleukin 2
IFN-τ	interferon-τ
LFA-2	lymphocyte function-associated antigen 2
LFA-3	lymphocyte function-associated antigen 3
LPS	lipopolysaccharide
MFCh	mean channel number of the logarithm of the fluoresence intensities determined by flow cytometry
mSC	mouse spleen cells
PBMC	human peripheral blood mononuclear cells
PBS-BSA	phosphate-buffered saline containing 1% bovine serum albumin
PHA	phytohemagglutinin
PWM	pokeweed mitogen
RPMI + S	RPMI 1640 medium containing FBS
RPMI+2.5%FBS	RPMI 1640 medium containing 2.5% FBS
RPMI+5%FBS	RPMI 1640 medium containing 5% FBS

RPMI+10%FBS	RPMI 1640 medium containing 10% FBS
SSF	secreted suppressive factor
TfR	transferrin receptor

INTRODUCTION

INTRODUCTION

I. Trypanosoma cruzi: an overview

Trypanosoma cruzi is the hemoflagellated protozoan which is the causative agent of Chagas' disease. Fifteen to twenty million people are estimated to be infected with this parasite and an additional forty to forty-five million are at risk of acquiring the infection (1). While the vast majority of the cases have been confined to the tropical and subtropical regions of South and Central America, several reports have demonstrated instances of human infection acquired in the United States (2-4), where a high percentage of intermediate invertebrate and vertebrate hosts harboring T. cruzi has been found in some geographical regions (5).

Chagas' disease can be divided into three phases: acute, latent, and chronic. The early, acute phase may be asymptomatic and occurs most frequently in children (5). Diagnosis may be made by the presence of an indurated skin lesion (chagoma) or an unilateral edema of the eyelid, conjunctivitis, and enlarged satellite lymph node (Romana's sign) (5,6). Parasitemia may also be demonstrated at this time and diminishes within two to three months. Other possible manifestations include fever, hepatosplenomegaly, lymphadenopathy, lymphocytosis, EKG alterations, heart failure, and meningoencephalitis (5,6). Mortality during the acute stage of infection is five to ten percent (5,7).

After a latent period of variable length, lasting up to twenty or thirty years, a percentage of those infected pass into the more severe, chronic stage of the disease. This stage is characterized by damage to the cardiovascular system (myocarditis, cardiac failure) or the digestive system (megacolon or megaesophagus), as well as nervous tissue (5,8-10). Ten percent of the deaths among adults may be due to chronic Chagas' disease in some regions of Central and South America (11).

Most of the early descriptions of parasite morphology and life cycle are the work of Carlos Chagas (reviewed in 5). The life cycle of this parasite involves transmission between an invertebrate host of the family Reduviidae, subfamily Triatominae, and a vertebrate host. A wide range of mammals serve as suitable hosts: these include man, domestic animals, and rodents, as well as sylvatic reservoirs. Amphibians and birds are refractory to infection (12,13).

Infection of the mammalian host begins when the elongated, flagellated metacyclic trypomastigotes from the insect feces are rubbed into mucosa or the site of a reduviid bite. The trypomastigotes invade nearby cells (especially those of the muscular tissues or the reticuloendothelial system) and transform into the amastigote form. The latter multiply by binary fission in the host cell's cytoplasm and then transform into nondividing bloodstream trypomastigotes which are released from the bursting host cell. These trypomastigotes may either invade other cells to continue the mammalian cycle or may be ingested by a reduviid bug during a blood meal. In the vector's midgut, trypomastigotes transform into epimastigotes, the dividing form in the

insect. After passage to the hindgut, the epimastigotes transform into the infective metacyclic trypomastigotes.

II. Immunosuppression caused by T. cruzi

Both the cellular and humoral arms of the immune system play important roles in host defense during the latent and chronic phases of Chagas' disease (reviewed in 5 and 14). The early, acute stage of infection in humans and mice, however, is characterized by a state of specific and nonspecific immunosuppression. This condition is not unique to T. cruzi infection, occurring in several other parasitic diseases as well. Several reports have demonstrated the occurrence of suppressed cell-mediated responses in humans during the acute phase of the disease (15,16). This phenomenon is accompanied by an increase in the absolute number of $CD8^+$ T suppressor/cytotoxic cells and a decrease in the number of $CD4^+$ T helper lymphocytes (16). Cellular immunity, as measured by lymphocyte blastogenesis and delayed-type hypersensitivity reactions, returns to normal levels during the chronic stage (17-19). Studies of the underlying mechanism(s) of this acute phase immunosuppression have not been undertaken in human infection, perhaps due in part to the difficulty in obtaining and/or diagnosing patients during this phase of the disease.

The vast majority of studies of T. cruzi-induced immunosuppression have utilized the mouse model system. Cell-mediated immune responses are inhibited in mice during the acute phase of infection. Splenocytes from these mice exhibit decreased blastogenic responses to the T cell mitogens concanavalin A (Con A) and phytohemagglutinin (PHA) and to the

B cell mitogens lipopolysaccharide (LPS) and dextran sulfate (20-27). Partial to complete recovery of these responses occurs during the chronic phase (24-26). Proliferative responses to trypanosomal antigens are also inhibited during the acute but not the chronic stage of the disease in the moderately susceptible CBA/J and resistant C57 BL/6 mice (25,26), whereas in the more susceptible C3H/HeJ mice, the suppression extends into the chronic phase as well (26). In addition to decreased proliferative responses, T cells from T. cruzi-infected mice are also defective in providing helper activity to B lymphocytes (28).

When either epimastigotes (27,29) or bloodstream trypomastigotes (29,30) are added to cultures of splenocytes from uninfected mice, there is a significant reduction in the blastogenic response to Con A and LPS. This decrease is produced only when the parasite is present during the initial 24 hours of stimulation (29,30), suggesting that the suppressive event occurs at an early stage of lymphocyte activation.

T. cruzi also inhibits the delayed-type hypersensitivity reaction to skin sensitizing agents (21,31) and trypanosomal antigens (21,32) during the acute phase of the disease. The inhibition in the response to T. cruzi antigens persists into the chronic phase while reponsiveness to an unrelated antigen is restored (33). Spleen cells from acutely but not from chronically infected mice are also unable to produce migration inhibitory factor in vitro (32,34).

The humoral arm of the immune system is also affected by T. cruzi infection. Splenocytes from acutely infected mice display deficient numbers of plaque-forming cells (PFC) to both T cell-dependent

(heterologous erythrocytes, trinitrophenyl-bovine serum albumin) and -independent (di- and trinitrophenyl-Ficoll, Brucella abortus, LPS) antigens in vitro (26,35-41). The decrease in IgG but not IgM PFC persists well into the chronic phase (40,41). Both primary and secondary IgG responses are affected, while only the primary IgM response is reduced (36,38). A restriction in the IgG isotype profile in the sera of chronically infected mice has also been noted; the predominant isotype being IgG2, with deficient production of IgG1 and IgG3 (42).

A number of mechanisms have been suggested to play a causative role in the above noted immunosuppression. Several researchers have reported the presence of suppressor T cells which decreased T and B cell proliferation (22), delayed-type hypersensitivity reactions (33), and IgG production (40). Other workers, however, have shown that the removal of Lyt 2.1 or Thy1 positive cells does not lead to a decrease in suppressive activity (20,25,43,44). Another cell type which has been demonstrated to play a role in T. cruzi-induced immunosuppression is the suppressor macrophage, which has been shown to decrease blastogenic responses (20,26,39,45) and the number of PFC (39,46). Indomethacin was shown to increase responsiveness (45), suggesting the involvement of PGE_2. Other macrophage functions which are required for immune responses, such as antigen uptake and presentation, expression of major histocompatibility complex (MHC) antigens, and release of interleukin 1, are not altered by T. cruzi infection (35,36,47). Decreased numbers of splenic T cells (24,44) and polyclonal activation of B (38,48,49) and T (49-51) cell responses, leading to clonal

de

in

st

ly

In

fo

T.

re

56

au

to

mi

sup

(59

is

Fin

sup

or

imm

spl

cel

leu

supp

cult

depletion, have also been suggested to have a part in causing the immunosuppression. Interleukin 2 (IL2) production is also decreased in stimulated splenocytes from infected mice (47,52). Since this lymphokine plays a vital role in both T and B cell responses (see Interleukin 2), the decrease in IL2 levels may be partially responsible for the deficiency in lymphocyte responsiveness.

Various soluble factors have also been suggested to play a role in T. cruzi-induced immunodeficiency. The first such factor to be reported was found in the serum of acutely infected animals (37,50,53-56): this work was not reproducible and was later retracted by the authors (57). Another factor was reported by this group of researchers to be present in the culture supernatant of splenocytes from infected mice (54,58) and acts only on syngeneic splenocytes. Recently, another suppressive factor from these culture supernatants has been reported (59). This factor has a molecular weight of 14 to 15 Kd, a pI of 6.6, is not haplotype-restricted and is believed to be of host cell origin. Finally, cultures of infected splenocytes are reported to produce a suppressive factor when incubated with epimastigotes, trypomastigotes, or the 104,000 x g supernatant fraction of epimastigotes (60).

Several attempts have been made to overcome T. cruzi-induced immunosuppression. Since IL2 production/secretion is decreased in spleen cells from infected mice and this lymphokine is required for T cell proliferation as well as for B cell differentation (see Interleukin 2), several groups of researchers have tried to overcome the suppressive effect of the parasite by the addition of exogenous IL2 to cultures of splenocytes from infected mice. T cell blastogenic

responses to Con A stimulation were not restored (47), while a recovery of B cell responses was produced by either crude (52,61) or purified IL2 (62). IL2 was also able to restore the ability of T cells to provide helper activity to B cells (28). When administered to infected mice either alone (63) or in combination with parasite antigens (64), IL2 restored the in vivo humoral responses of these mice with a subsequent decrease in parasitemia and a slight increase in longevity. The addition of IL2 and parasite antigens is most effective in restoration (64). This group has also found that the administration of parasite antigens alone is able to overcome the suppressive effect of T. cruzi if administered more than once and given at the appropriate time intervals (65).

III. An Overview of T Cell Stimulation

T lymphocyte stimulation, with the subsequent synthesis and release of factors involved in macrophage, B lymphocyte, and natural killer cell (NK) activation as well as in clonal expansion of antigen-specific T cells, plays a crucial role in the host immune response. Several pathways of T cell activation have been reported. The most common means of in vivo stimulation occurs via engagement of the T cell antigen receptor complex (CD3-Ti). The first event to occur in this pathway is the phagocytosis and processing of the antigen by macrophage/monocytes, B cells, and dendritic cells, followed by its presentation to T cells in the context of the correct MHC antigen (reviewed in 66). The $T4^+$ subset which consists of helper and suppressor-inducer cells recognizes processed antigen in the context of MHC class

I
cy
(
th
fo
bo
is
re
th
un
ant
tic
CD3
pro
cel
(IL
var
its
Pho
poss
of s
inte
cell

II antigens (67). The $T8^+$ subset to which both suppressor-effector and cytotoxic T cells belong responds to antigen plus class I MHC antigens (67).

The processed antigen and MHC molecule are recognized by the CD3-Ti complex on T cells (67). CD3 (T3) is a molecule which is found on all mature human T lymphocytes and consists of a membrane-bound heterotrimer (68) which is non-convalently linked to Ti (69). Ti is the clonotypically unique structure which allows specific antigen recognition (70,71). It is a membrane-bound heterodimer belonging to the immunoglobulin superfamily (72) whose individual chains each undergo somatic rearrangement to provide the large diversity of antigen-recognizing structures required by the host (73-76). Recognition of antigen plus MHC or the addition of antibodies to either Ti or CD3 leads to a removal of the complex from the cell surface (70,77) and provides the first signal in T cell activation (70,78-80).

In addition to their role in antigen presentation, macrophages, B cells, and dendritic cells also synthesize and secrete interleukin 1 (IL1) upon stimulation (81,82). This lymphokine elicits a large variety of responses in a number of different cell types (83). One of its actions is to provide a second signal in T cell stimulation (81). Phorbol myristyl acetate is able to mimick IL1 activity (84,85), possibly through the activation of protein kinase C. The combination of signals provided by CD3-Ti and IL1 lead to the production of interleukin 2 (IL2) and its surface receptor (IL2R) (83,86).

IL2 is a lymphokine synthesized and released by activated T helper cells (87). Upon binding to its receptor, IL2 transmits an intra-

c

t

i

a

a

m

h

a

D

s

it

sy

fa

sy

le

of

cellular signal for cell progression from the early to the late G_1 stage of the cell cycle (88,89). Resting cells bear only very low numbers of a low affinity form of the IL2R, but upon contact with processed antigen and IL1, T cells express greatly enhanced levels of membrane-bound receptors, including some with a high affinity for IL2 (see Interleukin 2 Receptors). Receptor phosphorylation (90), activation of a Na+/H+ pump (91), protein kinase C mobilization (92,93), activation of an unique protein kinase (94), increased levels of cytosolic Ca^{+2} (95,96), inositol triphosphate generation (97), and the inhibition of cAMP accumulation (98) have been reported to be involved in the signal transmission.

The synthesis of both IL2 and the IL2R occurs early during T cell activation and is transcriptionally regulated. IL2 mRNA is first seen at 9 hours after stimulation and peaks at 24 hours (99,100), while IL2R mRNA is first detectable at 3 hours and is maximal between 6 and 24 hours (100). Release of IL2 by the cells occurs by 12 hours of activation and is maximal at 48 hours (101). The expression of the IL2R on the surface of the cells begins approximately 6 hours after stimulation and peaks at 48 hours (102). The synthesis of both IL2 and its receptor are subsequently downregulated (100,102,103).

Other events occurring during T cell activation include the synthesis of IFN-τ (See Interferon-τ), the expression of several growth factor receptors (104-108), oncogene transcription (103,109), DNA synthesis, and cell division. Most of these events are regulated at least partially by the interaction of IL2 with the IL2R. The induction of IFN-τ transcription occurs approximately 3 hours after stimulation,

peaks at 9 to 15 hours, and begins to decrease at 24 hours (100). While several reports show that IL2 may upregulate IFN-τ production, these kinetic studies suggest that IFN-τ synthesis is at least partially independent of IL2 regulation (see Interferon-τ).

Transferrin is required for lymphocyte proliferation, and anti-transferrin receptor (TfR) antibodies block thymidine incorporation in T cells (106,110,111), indicating the vital role of this receptor in lymphocyte blastogenesis. This growth factor receptor is expressed late during lymphocyte activation, with its mRNA first being detectable at 6 to 14 hours and peaking between 14 and 48 hours (100,103). Expression of the TfR on the cell surface is detectable at 48 hours and is maximal 72 to 96 hours later (112). The expression of this receptor appears to be dependent on the presence of IL2, and antibodies to the IL2R block the appearance of the TfR on the cell surface (106), suggesting that the IL2-IL2R interaction regulates the expression of the TfR. Other growth factor receptors which are expressed at higher levels on activated T cells include the IL1 receptor (both high and low affinity forms; 113), the insulin receptor (104) and the type I and II insulin-like growth factor receptors (107).

The transcription of protooncongenes also occurs during T cell activation (103,109). Some of oncogene mRNA, such as c-myc and c-fos, appear early, prior to the induction of the IL2 mRNA, while others, such as c-myb, N-ras, and p53, are transcribed later. The expression of the latter group is enhanced by the addition of IL2 (103), suggesting a regulatory effect of this lymphokine.

Ultimately, the stimulated lymphocyte passes through the S and G_2 phases of the cell cycle to the M phase where it undergoes division. Thus, activation of the T cells by the CD3-Ti pathway leads to lymphokine production and expansion of antigen-reactive cells. Mitogenic lectins are able to mimick this process but produce polyclonal lymphocyte activation.

In addition to the above-mentioned antigen-dependent pathway, several antigen-independent pathways of T lymphocyte stimulation have been reported, involving CD2 (114), Tp44 (115-117), and Tp90 (118). Of these, the CD2 pathway has been best characterized (reviewed in 114). The first demonstration that CD2 [the sheep erythrocyte receptor, T11, lymphocyte function-associated antigen 2 (LFA-2), Leu5] may be involved in an alternative pathway of lymphocyte activation came from the finding that a pair of antibodies directed against two distinct epitopes of CD2, $T11_2$ and $T11_3$, were able to induce blastogenesis. This stimulation is monocyte-independent (112). Upon stimulation with PHA, the number of CD2 molecules on the cell surface increases, and $T11_3$ becomes detectable within 24 hours. This epitope is not expressed on resting cells and its expression is believed to result from a change in molecular conformation (112). An antibody directed against the $T11_2$ epitope, which is found on all T cells, also rapidly induces $T11_3$ expression, in as little as 30 minutes (112).

The ligand of CD2 has recently been identified as LFA-3 (119,120), a molecule expressed in endothelial, epithelial, and connective tissues, as well as on many blood cells (121). While all T cells may bind to an LFA-like molecule on sheep erythrocytes via CD2, only

activated T cells bind to human erythrocytes, which express a much lower level of LFA-3 than sheep erythrocytes (122,123). Two forms of LFA-3 have been characterized, one form attached to the cell membrane by a hydrophobic C-terminus and the other via a phosphatidylinositol tail (124,125). Both forms show significant homology to CD2 (124).

The binding of LFA-3 to CD2 allows T cells to become responsive to stimulation by anti-$T11_3$ (126). It is possible, therefore, that the interaction of CD2 with LFA-3 on accesory cells triggers $T11_3$ expression and that the subsequent binding of this epitope to its ligand induces antigen-indendent proliferation. This pathway may be of particular importance for immature thymocytes which lack the CD3-Ti complex (114). The putative ligand of $T11_3$ has yet to be identified.

CD2 and the CD3-Ti complex are separate entities and are not associated on the cell surface (127). Moreover, CD3-Ti is not required for CD2 activation since the latter pathway is operative in $CD3^-$ thymocytes (128). Nevertheless, the removal of CD3-Ti from the cell surface inhibits CD2-induced proliferation (112), suggesting that the antigen-dependent pathway may regulate CD2 responsiveness. Like stimulation via CD3-Ti, triggering by CD2 also involves the synthesis of IL2 and the expression of IL2R (128). Furthermore, CD2 activation induces phosphorylation of CD3 (129). Taken together, these data indicate that at least two pathways of T cell activation exist, either antigen-dependent or -independent. These pathways involve separate signaling molecules interacting with separate receptors but may merge subsequent to receptor binding, with each pathway regulating the activity of the other.

IV. Human Interleukin 2

IL2 is a lymphokine secreted by activated T cells which allows progression from the early to the late G1 phase of the cell cycle (see An Overview of T Cell Stimulation). It has been well characterized, at the amino acid as well as the DNA level. This lymphokine has a molecular weight of 15 kD and consists of a 133 amino acid polypeptide containing one intramolecular disulfide bridge (87). Although one O-linked glycosylation site is present, carbohydrate is not neccessary for biological activity (130-132). X-ray crystallography studies indicate a significant amount of α helical secondary structure (133).

There exists only a single copy of the IL2 gene, located on chromosome 4q (134). This gene contains 4 exons separated by intervening sequences (135,136). The cDNA for IL2 has also been cloned and sequenced (137), and encodes a polypeptide of 153 amino acids, with a putative signal sequence of 20 N-terminal residues.

IL2 has been found to have a variety of activities in several different cell types. In T lymphocytes, IL2 triggers the production of other lymphokines, the expansion of reactive clones and the generation of cytotoxic activity (101). In B lymphocytes, IL2 has been reported to play a role in both differentiation and division (138,139), although the former function is still a matter of controversy. IL2 enhances the cytotoxicity of monocytes and NK cells (140,141), as well as stimulating the respiratory burst and degranulation of neutrophils (142).

Deficient IL2 production is found in several pathological conditions. These include infection with T. cruzi (47,62), Trypanosoma

brucei (143,144), Trypanosoma congolense (145), Leishmania donovani (146), and Mycobacterium bovis (147), and in lepromatous leprosy (148), pulmonary tuberculosis (149), certain types of cancer (150), systemic lupus erythematosus (151), Hodgkin's disease (152), and AIDS (153-155). In the first four of these infections, exogenous IL2 has restorative effects either in vivo or on in vitro lymphocyte functions (28,47,61-64,143-146).

V. The Interleukin 2 Receptor (IL2R)

The biological activities of IL2 are mediated through the IL2R, which, after binding its ligand, is internalized and transported to the lysosomal compartment where it is degraded (156). The IL2R is expressed on activated T and B lymphocytes (156-158), with the former expressing approximately twice as many receptors as the latter (159). Immature thymocytes (160) and IFN-τ- or LPS-induced monocytes (161,162) also bear the receptor. The expression of the IL2R on T cells may be upregulated through several agents: these include IL1 (163), IL2 (164-166), IFN-τ (167,168), phorbol myristic acetate (169) and thymic hormones (170).

The initial binding studies using radiolabeled-IL2 detected 200-1,000 receptors on activated T cells with a Kd of 10^{-11} to 10^{-12} (170). Studies with ^{3}H-anti-Tac, an antibody to the receptor which blocks the binding of IL2 (172,173), however, detected 30,000 to 60,000 IL2R per cell (169). This discrepancy in receptor number was resolved by studies which used a broader range of radiolabeled-IL2 concentrations. These studies demonstrated the presence of two classes of

receptors: the first class bound ligand with the previously noted high affinity (Kd = 10^{-11} to 10^{-12}), while the second class had a Kd of approximately 10^{-8} and was represented by 40,000 to 50,000 molecules per cell (171). Anti-Tac binds both classes of the receptor (173), while physiological levels of IL2 are believed to interact with only the high affinity form (172). In order to further characterize the IL2R, several groups of investigators made use of various cell lines from patients with cutaneous T lymphomas transformed by the human T cell lymphotropic virus I (HTLV-1) (174). These cell lines include HUT 102, YT, and MT-1 and constitutively produce and express membrane-bound IL2R at 5 to 10 times higher levels than activated normal T cells (169,175). Additionally, several of these lines spontaneously release IL2 (175). Since these cells have greatly elevated numbers of IL2R, they were used to perform the initial purification and characterizations of the receptor (176-178). Subsequent studies have shown that the genes encoding this molecule as well as the amino acid sequences are the same in both normal and the HTLV-1-infected lines (179,180), although differences in molecular weight have been reported (177,178) and are due to variations in post-translational processing (180).

Information gleaned from the study of both HTLV-1-infected cell lines and normal lymphoblasts have revealed that the low affinity form of the receptor is composed of a single polypeptide chain that reacts with the anti-Tac antibody (176-178,181). It has a molecular weight of approximately 55 kD on lymphoblasts (50 kD on HUT102) with a pI of 5.6-6.0, contains N- and O-linked glycosylation, and is phosphorylated and sulfated (176-178,180). Proteolytic analysis of this molecule suggests

t

s

c

a

m

(

re

co

p5

it

do

ex

lo

tw

ti

of

ge

HT

Two

pai

pol

lea

act

pre

the existence of two disulfide-linked domains, with the IL2 binding site in the N-terminal region (182).

Complementary DNA for the above-mentioned p55 polypeptide has been cloned and sequenced, and encodes a protein consisting of 251 amino acids with a N-terminal extracellular region, a 19 amino acid transmembrane segment, and a predicted cytoplasmic region of 13 residues (183-185). This last finding was unexpected since most growth factor receptors have more extensive cytoplasmic tails, which frequently contain tyrosine kinase activity. This information suggested that the p55 polypeptide may be unable to generate an intracellular signal itself and may be associated with a separate molecule which is able to do so.

Genomic DNA for the p55 polypeptide has also been examined. There exists only a single copy of the gene encoding this molecule and it is located on chromosome 10 (179). The gene consists of 8 exons, of which two, exons 2 and 4, are believed to have arisen from a gene duplication. Interestingly, alternatively spliced mRNAs which lack the second of these sequences do not produce functional receptors (179). The IL2R gene has two transcription initiation sites in normal T cells (three in HTLV-I-infected lines) and three different polyadenylation sites (179). Two major size groups of mRNA have been found, of 1500 and 3500 base pairs, with the 1500 base pair moieties making use of the 5'-most polyadenylation site (183). The former group is believed to contain at least two kinds of mRNA and the latter, at least four, although the actual number of species in each group may be greater due to the presence of several transcription start sites as well as to alternative

RN
to

tr
fo
hu
fo
af

co
tra
the
bir
mem

IL2
rec
ana
was
bar

mol
str
appe
rece
howe
a no

RNA splicing (186). Both of these groups contain RNA which give rise to functional receptors (183).

When the cDNA encoding the human form of the p55 polypeptide was transfected into a mouse T-lymphocytic line, both low and high affinity forms of the IL2R were expressed and the cells were able to respond to human IL2 (187). When mouse L cells were the recipients of the cDNA for either human (187,188) or mouse (181,189) p55, low but not high affinity IL2R were produced. These low affinity receptors could be converted to the high affinity form following the fusion of the transfected L cells with membranes of human T cells (189). Together, these results suggested that p55 is responsible for low affinity binding and acts in concert with a second molecule, found in the membranes of T cells, to produce high affinity binding.

Evidence for the existence of the putative second chain of the IL2R was provided by studies in which ^{125}I-IL2 was cross-linked to its receptor using the bifunctional agent disuccinimidyl suberate and analyzed on SDS-polyacrylamide gels (190-194). When the cross-linking was performed with either normal T lymphoblasts or HUT 102 cells, two bands of 55 and 70-75 kD were detected (190-192,194,195). The 55 kD molecule is precipitable by anti-Tac (190-192,195) and is also demonstrable on cells transfected with p55 cDNA (191). This polypeptide thus appears to correspond to the previously characterized chain of the receptor. The 70-75 kD polypeptide (henceforth referred to as p75), however, does not react with anti-Tac (190-192,194,195) and represents a novel IL2-binding molecule.

w
l
w
n
r
a
(
t
i
a
a
r
o
a
b
a
i
a
t
o
o
r
m
t

Further clarification of the roles of p55 and p75 in IL2 binding were obtained by performing cross-linking studies with YT cells, a NK-like HTLV-1-infected cell line (196). Normally, these cells bind IL2 with a Kd of 10^{-9} (intermediate affinity binding) and this binding is not inhibitable by anti-Tac. Cross-linking studies using YT cells revealed a single IL2-binding band of 75 kD (192,195). These cells can also be induced to express the high affinity form of the receptor (196,197). Cross-linking of the induced YT cells to IL2 yields both the p75 and p55 chains (192,195). Taken together, these findings indicate that p55 alone is capable of low affinity IL2 binding, p75 alone produces binding of an intermediate affinity, and together, p55 and p75 form the high affinity IL2R. Since the number of low affinity receptors far exceeds the number of those of high affinity, the levels of p75 are believed to be the limiting factor in the formation of high affinity receptors.

The respective contributions of p55 and p75 to high affinity binding were examined recently (198,199). The p55 chain allows rapid association (5 sec) and dissociation (6-10 sec), while both the association (42-47 min) and dissociation (250-330 min) of IL2 with p75 is much slower. Together, they form a receptor with the rapid association (37 sec) characteristic of p55 and the slow dissociation (285 min) of p75.

As previously noted, p55 contains an extremely short cytoplasmic region which may be unable to function in signal transmission. The p75 molecule, on the other hand, is able to internalize IL2 (193) and transmit a signal for cell division (200,201) or immunoglobulin

(16

sym

VI.

sup

bnu

(14

dem

res

con

210

leu

in

sur

alt

the

(2

als

nor

enb

syn

p7

exp

synthesis (202,203) in the absence of p55. Additionally, low levels of p75 but not p55 are present on resting T cells (194,200) and thus may explain how high levels of IL2 are able to activate unstimulated cells (204).

In addition to the membrane-bound form of the IL2R, a soluble form also exists. These soluble receptors are released from activated normal T cells and HTLV-1-infected lines (205) and this release is enhanced by IL2 (206). The soluble form is approximately 10 kD less than the membrane-associated receptor and may thus arise by either alternative RNA splicing or by proteolytic cleavage from the cell surface (205,207). The serum levels of the soluble IL2R are enhanced in certain disease states, including Hodgkin's disease, adult T-cell leukemia, chronic lymphocytic leukemia, Sezary syndrome, and AIDS (208-210). Since the soluble receptor is able to bind IL2, it may act as a competitive inhibitor of the membrane-bound form, decreasing the IL2-responsiveness of T cells in these diseases (211).

Decreased expression of the membrane-associated IL2R has also been demonstrated in certain pathological conditions: pulmonary tuberculosis (149), Hodgkin's disease (152), AIDS (154,212), and infection with T. brucei (144). In the latter case, this decrease is the result of suppressor cell activity and not directly induced by the parasite.

VI. Interferon-γ

IFN-γ is another lymphokine produced by activated T cells. Its synthesis is regulated, at least in part, by IL2 since anti-Tac (164,213) and culture conditions which inhibit IL2 production (164,214)

also decrease IFN-τ synthesis. The addition of IL2 to these cultures restores IFN-τ production (214). IL2 is also able to induce IFN-τ synthesis in unstimulated lymphocytes and this effect is enhanced by phorbol myristate acetate (213). While these reports show the ability of IL2 to upregulate IFN-τ production, the presence of IL2 is not an absolute requirement since normal IFN-τ production occurs in T. brucei infections in the face of deficient levels of IL2 (144). Temporally, IFN-τ mRNA is produced prior to that of IL2 (see An Overview of T Cell Stimulation), again suggesting that IL2 is not the sole factor regulating IFN-τ production.

IFN-τ has a wide range of functions in a number of different cell types (reviewed in 215). In addition to its antiviral effects, this lymphokine induces the expression of MHC and LFA-1 antigens (215,216) and the Fc receptor for IgG (215), activates neutrophils (217), increases tumoricidal activity in monocytes and NK cells (141,218), activates macrophages and monocytes for antimicrobial activity (219) and induces differentiation of myelo-monocytic and B cells (215). In T cells, IFN-τ may either increase or decrease growth, depending on the dosage and time of administration (219,220). This enhancement may be due, in part, to the ability of IFN-τ to increase IL1 (221) and IL2 (222,223) production as well as the expression of IL2R on T cells (167,168) and monocytes (161,224).

IFN-τ is released from the stimulated T cells as a glycoprotein with a pI of 8.6 (225) which exists in three monomeric forms with molecular weights of 15, 20, and 25 kD, in increasing order of occurrence (226). These forms have identical amino acid sequences, with the

25 kD molecule containing two N-linked glycosylation sites and the 20 kD form having only one (227).

IFN-τ cDNA has been cloned and sequenced, and encodes a polypeptide of 146 amino acids, 20 of which are believed to function as a signal sequence (228). There exists only a single copy of the gene for IFN-τ, located on chromosome 12 (229). This gene is composed of four exons and contains a repetitive element (230).

Receptors for IFN-τ have been demonstrated on monocytes and monocyte-like cell lines (231-234), fibroblasts (235), lymphoblastoid cells (236,237), and WISH amniotic cells (238). This receptor binds IFN-τ with high affinity (Kd ranging from 10^{-9} to 10^{-10}) (231-235,237, 238). Cross-linking of radiolabeled IFN-τ to the cell membranes, followed by analysis by SDS-PAGE, shows a receptor with a molecular weight of 100-150 kD (234,236-238), whereas isolation of the receptor using anti-receptor antibodies produces two molecules of 50 and 90 kD, both of which can bind IFN-τ (239). Thus, the receptor appears to be composed of two subunits.

Deficient production of IFN-τ is found in several disease states, including acute tuberculosis (240), Leishmania infections (241,242), and lepromatous but not tuberculoid leprosy (243). Since leprosy is a spectrum of disease states with the lepromatous form exhibiting greater pathogenicity than the tuberculoid form, increased pathology correlates with defective IFN-τ production in this condition. Additionally, the decrease in IFN-τ synthesis in Leishmania infections is noted in susceptible but not resistant strains of mice (241,242). Thus, the

ability of a host to produce IFN-γ may determine the subsequent severity of some diseases.

VII. Research Goals

During the initial phase of Chagas' disease, there exists a state of suppressed responsiveness in both the humoral and the cellular branches of the immune system. All of the previously reported studies examining the underlying mechanisms of this phenomenon have utilized the mouse model system. The goals of this research were to study T. cruzi-induced immunosuppression of human T lymphocyte responses and to examine at which stage of lymphocyte activation this suppression first is seen.

Chapter one describes the ability of T. cruzi trypomastigotes to inhibit the proliferative response of normal human T lymphocytes stimulated by a variety of mitogens. The ability of activated human and mouse lymphocytes to produce and respond to IFN-γ is described in chapter two while the synthesis of IL1 and IL2 and the expression of the IL2R are the topics of chapter three.

Several markers of T cell activation have been described which appear in a definite temporal order. These markers include early activation antigen 1, the IL2R, and the transferrin receptor. Chapter four explores the ability of T. cruzi to affect each of these markers over time in order to study the specificity of the immunosuppression as well as to determine the earliest stages at which lymphocytes are inhibited. The expression of both the high and the low affinity form of the IL2R are examined.

The CD2 pathway of lymphocyte activation provides an alternative
:e to the better chacterized CD3-Ti pathway of stimulation. The
lity of T. cruzi to inhibit T cell stimulation through this pathway
examined in Chapter five.

Appendix 1 examines whether cell-to-parasite contact is required
the induction of immunosuppression and whether this event is
ersible.

Lymphocyte activation involves a series of stages as the cell
es from the resting stage of G_0 into the cell cycle; the parasite
ld exert its inhibitory effect at any of these stages. Immortalized
l lines, however, are already in the cell cycle and thus bypass
eral of the events which occur during activation, perhaps even the
ges which are acted upon by T. cruzi. The question of whether T.
zi is able to suppress the growth of several established cell lines
examined in Appendix 2.

REFERENCES

Science at work. 1984. UNDP/World Bank/WHO, Geneva, Switzerland.

Woody, N.C. and Woody, H.B. 1955. American trypanosomiasis (Chagas' disease): first indigenous case in the USA. J. Amer. Med. Assn. 159:676.

Schiffler, R.J., Mansur, G.P., Navin, T.R., and Limpakarnianarat, K. 1983. Indigenous Chagas' disease (American trypanosomiasis) in California. J. Amer. Med. Assn. 25:2983.

Navin, T.R., Roberto, R.R., Jaranek, D.D., Limpalarnjanarat, K., Mortenson, E.W., Clover, J.R., Yescott, R.E., Taclindo, C., Steurer, F., and Allain, D. 1985. Human and sylvatic Trypanosoma cruzi infection in California. Amer. J. Public Health. 75:366.

Teixeira, A.R.L. 1987. The stercorarian trypanosomes. In Immune responses in parasitic infections: Immunology, immunopathology, and immunoprophylaxis. p. 25-117. E. J. L. Soulsby ed. CRC Press, Boca Raton, FL.

Rassi, A. 1979. Clinica: Fase Aguda. In Trypanosoma cruzi e Doenca de Chagas. p. 249-264. Z. Brener and Z. Andrade eds. Guanabara Koogan, Rio de Raneiro, Brazil.

Miles, M.A. 1983. The epidemiology of South American trypanosomiasis - biochemical and immunological approaches and their relevance to control. Trans. Roy. Soc. Trop. Med. Hyg. 77:5.

Amorim, D.S., Manco, J.C., Gallo, L., Jr., and Neto, J.A.M. 1979. Clinica: Forma Cardiaca. In Trypanosoma cruzi e Doenca de Chagas. p. 265-311. Z. Brener and Z. Andrade eds. Guanabara Koogan, Rio de Raneiro, Brazil.

De Rezende, J.M. 1979. Clinica: Manifestacoes Digestivas. In Trypanosoma cruzi e Doenca de Chagas. p. 312-361. Z. Brener and Z. Andrade eds. Guanabara Koogan, Rio de Raneiro, Brazil.

10. Koberle, F. 1968. Chagas' disease and Chagas' syndromes: the pathology of American trypanosomiasis. Advances in Parasitology 6:63.

11. Gomez Pereira, M. 1984. Caractericticas da mortalidade urbana por Doenca de Chagas, Distrito Federal, Brazil. Boletin da Oficina Sanitaria Pan Americana 96:213.

12. Brener, Z. 1979. O parasito: Relacoes hospedeiro-parasito. In Trypanosoma cruzi e Doenca de Chagas. p. 1-41. Z. Brener and Z. Andrade eds. Guanabara Koogan, Rio de Raneiro, Brazil.

13. Kierszenbaum, F., Ivany, J. and Budzko, D.B. 1976. Mechanisms of natural resistance to trypanosomal infection. Role of complement in avian resistance to Trypanosoma cruzi infection. Immunology 30:1.

14. Scott, M.T., and Snary, D. 1982. Trypanosoma cruzi and Chagas disease. In Immunology of Parasitic Infections. p.262-298. Cohen and Warren eds. Blackwell Scientific, Boston, MA.

15. Teixeira, A.R.L., Teixeira, G., Macedo, V., and Prata, A. 1978. Acquired cell-mediated immunodepression in acute Chagas' disease. J. Clin. Invest. 62:1132.

16. Voltarelli, J.C., Donadi, E.A., and Falcao, R.P. 1987. Immunosuppression in human acute Chagas disease. Trans. Roy. Soc. Trop. Med. Hyg. 81:169.

17. Tshudi, E.I., Anziano, D.F., and Dalmasso, A.P. 1972. Lymphocyte transformation in Chagas disease. Infect. Immun. 6:905.

18. Montufar, O.M.B., Musatti, C.C., Mendes, E., and Mendes, N.F. 1977. Cellular immunity in chronic Chagas' disease. J. Clin. Microbiol. 5:401.

19. Gusmao, R., Rassi, A., Rezende, J.M., and Neva, F.A. 1984. Specific and nonspecific lymphocyte blastogenic responses in individuals infected with Trypanosoma cruzi. Am. J. Trop. Med. Hyg. 33:827.

20. Rowland, E.C., and Kuhn, R.E. 1978. Supression of cellular responses in mice during Trypanosoma cruzi infections. Infect. Imm. 20:393.

21. Rowland, E.C., and Kuhn, R.E. 1978. Suppression of anamnestic cellular responses during experimental American Trypanosomiasis. J. Parasitol. 64:741.

22. Ramos, C., Schadtler-Siwon, I., and Ortiz-Ortiz, L. 1979. Suppressor cells present in the spleens of Trypanosoma cruzi-infected mice. J. Immunol. 122:1243.

Cunningham, D.S., and Kuhn, R.E. 1980. Lymphoblast transformation as a measure of immune competence during experimental Chagas' disease. J. Parasitol. 66:390.

Hayes, M.M., and Kierszenbaum, F. 1981. Experimental Chagas' disease: kinetics of lymphocyte responses and immunological control of the transition from acute to chronic Trypanosoma cruzi infection. Infect. Immun. 31:1117.

Kierszenbaum, F. 1981. On evasion of Trypanosoma cruzi from the host immune response. Lymphoproliferative responses to trypanosomal antigens during acute and chronic experimental Chagas' disease. Immunol. 44:641.

O'Daly, J.A., Simonis, S., Rolo, N.D., and Caballero, H. 1984. Suppression of humoral immunity and lymphocyte responsiveness during experimental Trypanosoma cruzi infections. Rev. Inst. Med. trop. Sao Paulo. 26:67.

Lalonde, R.G., Ali-Khan, Z., and Tanowitz, H.B. 1985. Trypanosoma cruzi: Regulation of mitogenic responses during infection in genetically resistant and susceptible inbred mouse strains. Exp. Parasitol. 59:33.

Tarleton, R.L., and Kuhn, R.E. 1985. Measurement of parasite-specific immune responses in vitro: evidence for suppression of the antibody response to Trypanosoma cruzi. Eur. J. Immunol. 15:845.

Maleckar, J.R., and Kierszenbaum, F. 1984. Suppression of mouse lymphocyte responses to mitogens in vitro by Trypanosoma cruzi. Internat. J. Parasitol. 14:45.

Maleckar, J.R., and Kierszenbaum, F. 1983. Inhibition of mitogen-induced proliferation of mouse T and B lymphocytes by bloodstream forms of Trypanosoma cruzi. J. Immunol. 130:908.

Reed, S.G., Larson, C.L., and Speer, C.A. 1977. Suppression of cell-mediated immunity in experimental Chagas' disease. Z. Parasitenk. 52:11.

Maleckar, J.R., and Kierszenbaum, F. 1983. Variation in cell-mediated immunity to Trypanosoma cruzi during experimental Chagas' disease. Ann. Trop. Med. Parasitol. 77:247.

Scott, M.T. 1981. Delayed hypersensitivity to Trypanosoma cruzi in mice: specific suppressor cells in chronic infection. Immunol. 44:409.

Schmunis, G.A., Vattuone, H., A. Szarfman, and Pesce, U.J. 1973. Cell mediated immunity in mice inocculated with epimastigotes or trypomastigotes of Trypanosoma cruzi. Z. Tropenmed. Parasit. 24:81.

Clinton, B.A., Ortiz-Ortiz, L., Garcia, W., Martinez, T., and Capin, R. 1975. Trypanosoma cruzi: Early immune responses in infected mice. Exper. Parasitol. 37:417.

Ramos, C., Lamoyi, E., Feole, M., Rodriguez, M., Peirez, M., and Ortiz-Ortiz, L. 1978. Trypanosoma cruzi: Immunosuppressed responses to different antigens in the infected mouse. Exp. Parasit. 45:190.

Cunningham, D.S., Kuhn, R.E., and Rowland, E.C. 1978. Suppression of humoral responses during Trypanosoma cruzi infections in mice. Infect. Immun. 22:155.

Corsini, A.C., Oliveira, O.L.P., and Costa, M.G. 1980. Humoral suppression in Trypanosoma cruzi infection in relation to the timing of antigen presentation. Z. Parasitenk. 64:85.

Cunningham, D.S., and Kuhn, R.E. 1980. Trypanosoma cruzi-induced suppression of the primary immune response in murine cell cultures to T-cell-dependent and -independent antigens. J. Parasitol. 66:16.

Reed, S.G., Roters, S.B., and Goidl, E.A. 1983. Spleen cell-mediated suppression of IgG production to a non-parasite antigen during chronic Trypanosoma cruzi infection in mice. J. Immunol. 131:1978.

Jeng, G.K.C., and Kierszenbaum, F. 1984. Alterations in production of immunoglobulin classes and subclasses during experimental Trypanosoma cruzi infection. Infect. Immun. 43:768.

Scott, M.T., and Goss-Sampson, M. 1984. Restricted IgG profiles in T. cruzi infected mice and Chagas' disease patients. Clin. exp. Immunol. 58:372.

Kierszenbaum, F., and Budzko, D.B. 1982. Trypanosoma cruzi: deficient lymphocyte reactivity during experimental acute Chagas' disease in the absence of suppressor T cells. Parasite Immunol. 4:441.

Harel-Bellan, A., Joskowitz, M., Fradelizi, D., and Eisen, H. 1985. T lymphocyte function during experimental Chagas' disease: production of and response to interleukin 2. Eur. J. Immunol. 15:438.

Kierszenbaum, F. 1982. Immunologic deficiency during experimental Chagas' disease (Trypanosoma cruzi infection): role of adherent, nonspecific esterase-positive cells. J. Immunol. 129:2202.

Tarleton, R.L., and Scott, D.W. 1987. Initial induction of immunity, followed by suppression of responses to parasite

antigens during Trypanosoma cruzi infection of mice. Parasite Immunol. 9:579.

Harel-Bellan, A., Joskowitz, M., Fradelizi, D., and Eisen, H. 1983. Modification of T-cell proliferation and interleukin 2 production in mice infected with Trypanosoma cruzi. Proc. Natl. Acad. Sci. USA 80:3466.

Ortiz-Ortiz, L., Parks, D.E., Rodriguez, M., and Weigle, W.O. 1980. Polyclonal B lymphocyte activation during Trypanosoma cruzi infection. J. Immunol. 124:121.

Minoprio, P.M., Eisen, H., Forni, L., D'Imperio Lima, M.R., Joskowicz, M., and Coutinho, A. 1986. Polyclonal lymphocyte responses to murine Trypanosoma cruzi infection. I. Quantitation of both T- and B-cell responses. Scand. J. Immunol. 24:661.

Cunningham, D.S., and Kuhn, R.E. 1980. Trypanosoma cruzi-induced suppressor substance. I. Cellular involvement and partial characterization. J. Immunol. 124:2122.

Minoprio, P.M., Coutinho, A., Joskowicz, M., D'Imperio Lima, M.R., and Eisen, H. 1986. Polyclonal lymphocyte responses to murine Trypanosoma cruzi infection. II. Cytotoxic T lymphocytes. Scand. J. Immunol. 24:669.

Tarleton, R.L., and Kuhn, R.E. 1984. Restoration of in vitro immune responses of spleen cells from mice infected with Trypanosoma cruzi by supernatants containing interleukin 2. J. Immunol. 133:1570.

Cunningham, D.S., and Kuhn, R.E. 1980. Trypanosoma cruzi-induced suppressor substance. II. Regulatory activity. Immunogenetics 10:557.

Cunningham, D.S., and Kuhn, R.E. 1980. Trypanosoma cruzi-induced suppressor substance. III. Activation of suppressor cells. J. Parasitol. 66:881.

Cunningham, D.S., Benavides, G.R., and Kuhn, R.E. 1980. Differences in the regulation of humoral responses between mice infected with Trypanosoma cruzi and mice administered T. cruzi-induced suppressor substance. J. Immunol. 125:2317.

Cunningham , D.S., Benavides, G.R., and Kuhn, R.E. 1980. Suppression of mitogen-induced blastogenesis by the Trypanosoma cruzi-induced suppressor substance. J. Parasitol. 66:722.

Tarleton, R.L., and Kuhn, R.E. 1984. Loss of suppressor activity in the serum of mice infected with Trypanosoma cruzi. J. Parasitol. 70:253.

. Cunningham, D.S., Kuhn, R.E., and Hatcher, F.M. 1981. Trypanosoma cruzi: responses by cells from infected mice to alloantigens. Exp. Parasitol. 51:141.

. Serrano, L.E., and O'Daly, J.A. 1987. Protein fraction from Trypanosoma cruzi infected spleen cell supernatants with immuonsuppressive activity in vitro. Internat. J. Parasitol. 17:851.

. Tarleton, R.L., Schafer, R., and Kuhn, R.E. 1983. Effects of extracts of Trypanosoma cruzi on immune responses: induction of a nonspecific suppressor factor. Infect. Immun. 41:978.

. Reed, S.G., Inverso, J.A., and Roters, S.B. 1984. Heterologous antibody responses in mice with chronic T. cruzi infection: depressed T helper function restored with supernatants containing interleukin 2. J. Immunol. 133:1558.

. Reed, S.G., Inverso, J.A., and Roters, S.B. 1984. Suppressed antibody responses to sheep erythrocytes in mice with chronic Trypanosoma cruzi infections are restored with interleukin 2. J. Immunol. 133:3333.

. Choromanski, L., and Kuhn, R.E. 1985. Interleukin 2 enhances specific and nonspecific immune responses in experimental Chagas' disease. Infect. Immun. 50:354.

. Choromanski, L., and Kuhn, R.E. 1987. Use of parasite antigens and interleukin-2 to enhance suppressed immune responses during Trypanosoma cruzi infection in mice. Infect. Immun. 55:403.

. Choromanski, L., and Kuhn., R.E. 1986. Repeated antigenic stimulation overcomes immunosuppression in experimental Chagas' disease. Immunol. 59:289.

. Unanue, E.R. 1984. Antigen-presenting function of the macrophage. Ann. Rev. Immunol. 2:395.

. Meuer, S.C., Acuto, O., Hercend, T., Schlossman, S.F., and Reinherz, E.L. 1984. The human T-cell receptor. Ann. Rev. Immunol. 2:23.

. Borst, J., Alexander, S., Elder, J., and Terhorst, C. 1983. The T3 complex on human T lymphocytes involves four structurally distinct glycoproteins. J. Biol. Chem. 258:5135.

. Brenner, M.B., Trowbridge, I.S., and Strominger, J.L. 1985. Cross-linking of human T cell receptor proteins: association between the T cell idiotype β subunit and the T3 glycoprotein heavy subunit. Cell 40:183.

0. Meuer, S.C., Fitzgerald, K.A., Hussey, R.E., Hodgdon, J.C., Schlossman, S.F., and Reinherz, E.L. 1983. Clonotypic structures involved in antigen-specific human T cell function. Relationship to the T3 molecular complex. J. Exp. Med. 157:705.

1. Reinherz, E.L., Acuto, O., Fabbi, M., Bensussan, A., Milanese, C., Royer, H.D., Meuer, S.C., and Schlossman, S.F. 1984. Clonotypic surface structure on human T lymphocytes: Functional and biochemical analysis of the antigen receptor complex. Immunological Rev. 81:95.

2. Hood, L., Kronenberg, M., and Hunkapillar, T. 1985. T cell antigen receptors and the immunoglobulin supergene family. Cell 40:225.

3. Yanagi, Y., Yoshikai, Y., Leggett, K., Clark, S.P., Aleksander, I., and Mak, T.W. 1984. A human T cell-specific cDNA clone encodes a protein having extensive homology to immunoglobuin chains. Nature 308:145.

4. Hedrick, S.M., Cohen, D.I., Nielsen, E.A., and Davis, M.M. 1984. Isolation of cDNA clones encoding T cell-specific membrane-associated proteins. Nature 308:149.

5. Hedrick, S.M., Nielsen, E.A., Kavaler, J., Cohen, D.I., and Davis, M.M. 1984. Sequence relationships between putative T-cell receptor polypeptides and immunoglobulins. Nature 308:153.

. Chien, Y., Gascoigne, N.R.J., Kavaler, J., Lee, N.E., and Davis, M.M. 1984. Somatic recombination in a murine T-cell receptor gene. Nature 309:322.

. Reinherz, E.L., Meuer, S., Fitzgerald, K.A., Hussey, R.E., Levine, H., and Schlossman, S.F. 1982. Antigen recognition by human T lymphocytes is linked to surface expression of the T3 molecular complex. Cell 30:735.

. Meuer, S.C., Hodgdon, J.C., Hussey, R.E., Protentis, J.P., Schlossman, S.F., and Reinherz, E.L. 1983. Antigen-like effects of monoclonal antibodies directed at receptors on human T cell clones. J. Exp. Med. 158:988.

Meuer, S.C., Hussey, R.E., Cantrell, D.A., Hodgdon, J.C., Schlossman, S.F., Smith, K.A., and Reinherz, E.L. 1984. Triggering of the T3-Ti antigen-receptor complex results in clonal T-cell proliferation through an interleukin 2-dependent autocrine pathway. Proc. Natl. Acad. Sci. USA 81:1509.

Landegren, U., Andersson, J., and Wigzell, H. 1984. Mechanism of T lymphocyte activation by OKT3 antibodies. A general model for T cell induction. Eur. J. Immunol. 14:325.

31. Mizel, S.B. 1982. Interleukin 1 and T cell activation. Immunological Rev. 63:51.

32. Matsushima, K., Procopio, A., Abe, H., Scalla, G., Ortaldo, J.R., and Oppenheim, J.J. 1985. Production of interleukin 1 activity by normal human peripheral blood B lymphocytes. J. Immunol. 135:1132.

33. Durum, S.K., Schmidt, J.A., and Oppenheim, J.J. 1985. Interleukin 1: an immunological perspective. Ann. Rev. Immunol. 3:263.

34. Rosenstreich, D.L., and Mizel, S.B. 1979. Signal requirements for T lymphocyte activation. I. Replacement of macrophage function with phorbol myristic acetate. J. Immunol. 123:1749.

35. Farrar, J.J., Mizel, S.B., Fuller-Farrar, J., Farrar, W.L., and Hilfiker, M.L. 1980. Macrophage-independent activation of helper T cells I. Production of interleukin 2. J. Immunol. 125:793.

36. Smith, K.A., Gilbride, K.J., and Favata, M.F. 1980. Lymphocyte activating factor promotes T-cell growth factor production by cloned murine lymphoma cells. Nature 287:853.

37. Robb, R.J. 1984. Interleukin 2: the molecule and its function. Immunol. Today 5:203.

38. Kristensen, F., Bettens, F., Walker, C., Jancourt, F., and de Weck, A.L. 1983. Human lymphocyte proliferation: relationship between cell cycle events and interleukin-2 (IL-2) production. In Interleukins, Lymphokines, and Cytokines. p. 43-49. J. J. Oppenheim and S. Cohen eds. Academic Press, New York.

39. Stern, J.B., and Smith, K.A. 1986. Interleukin-2 induction of T-cell G_1 progression and c-myb expression. Science 233:203.

40. Farrar, W.L., and Taguchi, M. 1985. Interleukin 2 stimulation of protein kinase C membrane association: evidence for IL-2 receptor phosphorylation. Lymphokine Res. 4:87.

41. Mills, G.B., Cragoe, E.J., Jr., Gelfand, E.W., and Grinstein, S. 1985. Interleukin 2 induces a rapid increase in intracellular pH through activation of a Na^+/H^+ antiport. J. Biol. Chem. 260:12500.

Farrar, W.L., and Anderson, W.B. 1985. Interleukin-2 stimulated association of protein kinase C with plasma membrane. Nature 315:233.

Farrar, W.L., and Ruscetti, F.W. 1986. Association of protein kinase C with interleukin 2 receptor expression. Immunol. 136:1266.

Evans, S.W., and Farrar, W.L. 1987. Identity of common phospholylation substrates stimulated by interleukin 2 and diacylglycerol suggests a role of protein kinase C for IL 2 signal transduction. J. Cell. Biochem. 34:47.

Gearing, A.J.H., Wadhwa, M., and Perris, A.D. 1985. Interleukin 2 stimulates T cell proliferation using a calcium flux. Immunol. Lett. 10:297.

Rossio, J.L., and Ruscetti, F.W. 1986. Ligand-specific calcium mobilization in IL 2 and IL 3 dependent cell lines. Lymphokine Res. 5:163.

Farrar, W.L., and Ruscetti, F.W. 1986. Developments concerning the biochemical and molecular basis of IL-2 mediated T cell growth. In The Year in Immunology. p. 90-96. J.M. Cruse, R.E. Lewis, Jr. eds. Karger, Basel, Switzerland.

Becknar, S.K., and Farrar, W.L. 1986. Interleukin 2 modulation of adenylate cyclase: potential role of protein kinase C. J. Biol. Chem. 261:3043.

Efrat, S., Pilo, S., and Kaempfer, R. 1982. Kinetics of induction and molecular size of mRNAs encoding human inter-leukin-2 and γ-interferon. Nature 297:236.

Kronke, M., Leonard, W.J., Depper, J.M., and Greene, W.C. 1985. Sequential expression of genes involved in human lymphocyte growth and differentiation. J. Exp. Med. 161:593.

Farrar, J.J., Benjamin, W.R., Hilfiker, M.L., Howard, M., Farrar, W.L., and Fuller-Farrar, J. 1982. The biochemistry, biology, and role of interleukin 2 in the induction of cytotoxic T cell and antibody-forming B cell responses. Immunological Rev. 63:129.

Depper, J.M., Leonard, W.J., Kronke, M., Noguchi, P.D., Cunningham, R.E., Waldmann, T.A., and Greene, W.C. 1984. Regulation of interleukin 2 receptor expression: effects of phorbol diester, phospholipase C, and reexposure to lectin or antigen. J. Immunol. 133:3054.

Reed, J.C., Alpers, J.D., Nowell, P.C., and Hoover, R.G. 1986. Sequential expression of protooncogenes during lectin-stimulated mitogenesis of normal human lymphocytes. Proc. Natl. Acad. Sci. USA 83:3982.

Krug, U., Krug, F., and Cuatrecasas, P. 1972. Emergence of insulin receptors on human lymphocytes during <u>in vitro</u> transformation. Proc. Natl. Acad. Sci. USA 69:2604.

105

106

107

108

109.

110.

111.

112.

113.

114.

115.

Cottner, T., Williams, J.M., Christenson, L., Shapiro, H.M., Strom, T.B., and Strominger, J. 1983. Simultaneous flow cytometric analysis of human T cell activation antigen expression and DNA content. J. Exp. Med. 157:461.

Neckers, L.M., and Cossman, J. 1983. Transferrin receptor induction in mitogen-stimulated human T lymphocytes is required for DNA synthesis and cell division and is regulated by interleukin 2. Proc. Natl. Acad. Sci. USA 80:3494.

Kozak, R.W., Haskell, J.F., Greenstein, L.A., Rechler, M.M., Waldmann, T.A., and Nissley, S.P. 1987. Type I and II insulin-like growth factor receptors on human phytohemagglutinin-activated T lymphocytes. Cell. Immunol. 109:318.

Konttinen, Y.T., Berfroth, V., Nordstrom, D., Segerberg-Konttinen, M., and Tolvanen, E. 1986. Expression of MHC class II antigen, interleukin-2 receptor, transferrin receptor and GP 40/80 glycoprotein during different phases of a normal PHA-driven lymphocyte activation in vitro. Acta Path. Microbiol. Immunol. Scand. 94:181.

Kelly, K., Cochran, B.H., Stiles, C.D., and Leder, P. 1983. Cell-specific regulation of the c-myc gene by lymphocyte mitogens and platelet-derived growth factor. Cell 35:603.

Dillner-Centerlind, M.-L., Mammerstrom, S., and Perlmann, P. 1979. Transferrin can replace serum for in vitro growth of mitogen-stimulated T lymphocytes. Eur. J. Immunol. 9:942.

Brock, J.H., and Mainou-Fowler, T. 1983. The role of iron and transferrin in lymphocyte transformation. Immunol. Today 4:347.

Meuer, S.C., Hussey, R.E., Fabbi, M., Fox, D., Acuto, O., Fitzgerald, K.A., Hodgdon, J.C., Protentis, J.P., Schlossman, S.F., and Reinherz, E.L. 1984. An alternative pathway of T-cell activation: a functional role for the 50 kD T11 sheep erythrocyte receptor protein. Cell 36:897.

Lowenthal, J.W., and MacDonald, H.R. 1986. Binding and internalization of interleukin 1 by T cells. J. Exp. Med. 614:1060.

Springer, T.A., Dustin, M.L., Kishimoto, T.K., and Marlin, S.D. 1987. The lymphocyte function-associated LFA-1, CD2, and LFA-3 molecules: cell adhesion receptors of the immune system. Ann. Rev. Immunol. 5:223.

Moretta, A., Pantaleo, G, Lopex-Botet, M., and Moretta, L. 1985. Involvement of T44 molecules in an antigen-independent pathway of T cell activation. Analysis of the correlations to the T cell antigen-receptor complex. J. Exp. Med. 162:823.

116.

117.

118.

119.

120.

121.

122.

123.

124.

125.

126.

Hara, T., Fu, S.M., and Hanson, J. 1985. Human T cell activation. II. A new activation pathway used by a major T cell population via a disulfide-bonded dimer of a 44 kilodalton polypeptide (9.3 antigen). J. Exp. Med. 161:1513.

Weiss, A., Manger, B., and Imboden, J. 1986. Synergy between the T3/antigen receptor complex and Tp44 in the activation of human T cells. J. Immunol. 137:819.

Carrel, S., Salvi, S., Giuffre, L., Isler, P., and Cerottini, J.-C. 1987. A novel 90-kDa polypeptide (Tp90) possibly involved in an antigen-independent pathway of T cell activation. Eur. J. Immunol. 17:835.

Plunkett, M.L., Sanders, M.E., Selvaraj, P., Dustin, M.L., and Springer, T.A. 1987. Rosetting of activated human T lymphocytes with autologous erythrocytes. Definition of the receptor and ligand molecules as CD2 and lymphocyte function-associated antigen 3 (LFA-3). J. Exp. Med. 165:664.

Dustin, M.L., Sanders, M.E., Shaw, S., and Springer, T.A. 1987. Purified lymphocyte function-associated antigen 3 binds to CD2 and mediates T lymphocyte adhesion. J. Exp. Med. 165:677.

Krensky, A.M., Sanchez-Madrid, F., Robbins, E., Nagy, J.A., Springer, T.A., and Burakoff, S.J. 1983. The functional significance, distribution, and structure of LFA-1, LFA-2, and LFA-3: cell surface antigens associated with CTL-target interactions. J. Immunol. 131:611.

Makogoba, M.W., Shaw, S., Gugel, E.A., and Sanders, M.E. 1987. Human T cell rosetting is mediated by LFA-3 on autologous erythrocytes. J. Immunol. 138:3587.

Selvara, P., Dustin, M.L., Mitnacht, R., Hunig, T., Springer, T.A., and Plunkett, M.L. 1987. Rosetting of human T lymphocytes with sheep and human erythrocytes: comparison of human and sheep ligand binding using purified E receptor. J. Immunol. 138:2690.

Seed, B. 1987. An LFA-3 cDNA encodes a phospholipid-linked membrane protein homologous to its receptor CD2. Nature 329:840.

Dustin, M.L., Selvarj, P., Mattaliano, R.J., and Springer, T.A. 1987. Anchoring mechanisms for LFA-3 cell adhesion glycoprotein at membrane surface. Nature 329:846.

Hunig, T., Tiefenthaler, G., zum Buscherfelde, K.-H.M., and Meuer, S.C. 1987. Alternative pathway of activation of T cells by binding of CD2 to its cell-surface ligand. Nature 326:298.

127.

128.

129.

130.

131.

132.

133.

134.

135.

136.

137.

Meuer, S.C., Acuto, O., Hussey, R.E., Hodgdon, J.C., Fitzgerald, K.A., Schlossman, S.F., and Reinherz, E.L. 1983. Evidence for the T3-associated 90 kd heterodimer as the T cell antigen receptor. Nature 303:808.

Fox, D.A., Hussey, R.E., Fitzgerald, K.A., Bensussan, A., Daley, J.F., Schlossman, S.F., and Reinherz, E.L. 1985. Activation of human thymocytes via the 50kD T11 sheep erythrocyte binding protein induces the expression of interleukin 2 receptors on both $T3^+$ and $T3^-$ populations. J. Immunol. 134:330.

Breitmeyer, J.B., Daley, J.F., Levine, H.B., and Schlossman, S.F. 1987. The T11 (CD2) molecule is functionally linked to the T3/Ti T cell receptor in the majority of T cells. J. Immunol. 139:2899.

Robb, R.J., and Smith, K.A. 1981. Heterogeneity of human T-cell growth factor(s) due to variable glycosylation. Mol. Immunol. 18:1087.

Robb, R.J., Kutny, R.M., Panico, M., Morris, H.R., and Chowdhry, V. 1984. Amino acid sequence and post-translational modification of human interleukin 2. Proc. Natl. Acad. Sci. USA 81:6486.

Roifman, C.M., Mills, G.B., Chu, M., and Gelfand, E.W. 1985. Functional comparison of recombinant interleukin 2 (IL-2) with IL-2-containing preparations derived from cultured cells. Cell. Immunol. 95:146.

Brandhubert, B.J., Boone, T., Kenney, W.C., and McKay, D.B. 1987. Crystals and a low resolution structure of interleukin-2. J. Biol. Chem. 262:12306.

Seigel, L.J., Harper, M.E., Wang-Staal, F., Gallo, R.C., Nash, W.G., and O'Brien, S.J. 1984. Gene for T-cell growth factor: location on human chromosome 4q and feline chromosome B1. Science 223:175.

Holbrook, N.J., Smith, K.A., Fornace, A.J., Jr., Comeau, C.M., Wiskocil, R.L., and Crabtree, G.R. 1984. T-cell growth factor: complete nucleotide sequence and organization of the gene in normal and malignant cells. Proc. Natl. Acad. Sci. USA 81:1634.

Fujita, T., Takoaka, C., Matsui, H., and Taniguchi, T. 1983. Structure of the human interleukin 2 gene. Proc. Natl. Acad. Sci. USA 80:7437.

Taniguchi, T., Matsui, H., Fujita, T., Takaoka, C., Kabukazu, N., Yoshimoto, R., and Hamuro, J. 1983. Structure and expression of a cloned cDNA for human interleukin-2. Nature 302:305.

138. M
M
C

139. M
h
2

140. M
W
d
3

141. P
i
m

142. K
m
h

143. S
s
T

144. S
E
b
e

145. M
I
S
5

146. R
m
s
1

147. V
D
i
e

148. H
Y
u

149. T
i
t

Muraguchi, A., Kenrl, J.H., Butler, J.L., and Fauchi, A.S. 1984. Regulation of human B-cell activation, proliferation, and differentiation by soluble factors. J. Clin. Invest. 4:337.

Miedema, F., and Melief, C.J.M. 1985. T-cell regulation of human B-cell activation. A reappraisal of the role of interleukin 2. Immunol. Today. 6:258.

Malkovsky, M., Loveland, B., North, M., Asherson, G.L., Gao, L., Ward, P., and Fiers, W. 1987. Recombinant interleukin-2 directly augments the cytotoxicity of human monocytes. Nature 325:262.

Frey, J.R., Kamber, M., and Peck, R. 1987. Recombinant interferons or interleukin-2 increase cytotoxicity by human monocytes and NK cells. Lymphokine Res. 6:215.

Kowanko, I.C., and Ferrante, A. 1987. Interleukin 2 inhibits migration and stimulates respiratory burst and degranulation of human neutrophils in vitro. Immunol. Lett. 15:285.

Sileghem, M. Hamers, R., and De Baetseiler, P. 1986. Active suppression of interleukin 2 secretion in mice infected with Trypanosoma brucei AnTaT 1.1.E. Parasite Immunol. 8:641.

Sileghem, M., Hamers, R., and De Baetseller, P. 1987. Experimental Trypanosoma brucei infections selectively suppress both interleukin 2 production and interleukin 2 receptor expression. Eur. J. Immunol. 17:1417.

Mitchell, L.A., Pearson, T.W., and Gauldie, J. 1986. Interleukin-1 and interleukin-2 production in resistant and susceptible mice infected with Trypanosoma congolense. Immunol. 57:291.

Reiner, N.E., and Finke, J.H. 1983. Interleukin 2 deficiency in murine Leishmaniasis donovani and its relationship to depressed spleen cell responses to phytohemagglutinin. J. Immunol. 131:1487.

Vismara, D., Lombardi, G., Piccolella, E., and Colizzi, V. 1985. Dissociation between interleukin-1 and interleukin-2 production in proliferative response to microbial antigens: restorative effects of exogenous interleukin-2. Infect. Immun. 49:298.

Haregewain, A., Godal, T., Mustafa, A.S., Belehu, A., and Yemaneberhan, T. 1983. T-cell conditioned media reverse T-cell unresponsiveness in lepromatous leprosy. Nature 303:342.

Toossi, Z., Kleinhenz, M.E., and Ellner, J.J. 1986. Defective interleukin 2 production and responsiveness in human pulmonary tuberculosis. J. Exp. Med. 163:1162.

150

151

152

153

154

155

156

157

158

159

160

161

Mertelsmann, R., and Welte, K. 1986. Human interleukin 2: molecular biology , physiology and clinical possibilities. Immunobiol. 172:400.

Murakawa, Y., Takeda, S., Ueda, Y. Suzuki, N., Hasina, T., and Sakema, T. 1985. Characteristics of T lymphocyte subpopulation responsible for deficient interleukin 2 actitiy in patients with systemic lupus erythematosus. J. Immunol. 134:187.

Zamkoff, K.W., Reeves, W.G., Paolozzi, B.J., Comis, R.L., and Tamar, R.H. 1985. Impaired interleukin regulation of the phytohemagglutinin response in Hodgkin's disease. Clin. Immunol. Immunopathol. 35:111.

Welte, K., and Mertelsmann, R. 1985. Human interleukin 2: biochemistry, physiology, and possible pathogenetic role in immunodeficiency syndromes. Canc. Invest. 3:35.

Gupta, S. 1986. Study of activated T cells in man. II. Interleukin 2 receptor and transferrin receptor expression on T cells and production of interleukin 2 in patients with acquired immune deficiency syndrome (AIDS) and AIDS-related complex. Clin. Immunol. Immunopath. 38:93.

Borzy, M.S. 1987. Interleukin 2 production and responsiveness in individuals with acquired immunodeficiency syndrome. Cell. Immunol. 104:142.

Robb, R.J., Munck, A., and Smith, K.A. 1981. T cell growth factor receptors: quantitation, specificity, and biological relevance. J. Exp. Med. 154:1455.

Tsudi, M., Uchiyama, T., and Uchino, H. 1984. Expression of Tac antigen on activated normal human B cells. J. Exp. Med. 160:612.

Waldmann, T.A., Goldman, C.K., Robb, R.J., Depper, J.M., Leonard, W.J., Sharrow, S.O., Bongiovanni, K.F., Korsmeyer, S.J., and Greene, W.C. 1984. Expression of interleukin 2 receptors on activated human B cells. J. Exp. Med. 160:1450.

Lowenthal, J.W., Zubler, R.H., Nabholz, M., and MacDonald, H.R. 1985. Similarities between interleukin-2 receptor number and affinity on activated B and T lymphocytes. Nature 315:669.

Raulet, D.H. 1985. Expression and function of interleukin-2 receptors on immature thymocyes. Nature 314:101.

Herrmann, F., Cannistra, S.A., Levine, H., and Griffin, J.D. 1985. Expression of interleukin 2 receptors and binding of interleukin 2 by gamma interferon-induced human leukemic and normal monocytic cells. J. Exp. Med. 162:1111.

162.

163.

164.

165.

166.

167.

168.

169.

170.

171.

Holter, W., Goldman, C.K., Casbo, L., Nelson, D.L., Greene, W.C., and Waldmann, T.A. 1987. Expression of functional IL 2 receptors by lipopolysaccharide and interferon-τ stimulated human monocytes. J. Immunol. 138:2917.

Kaye, J., Gillis, S., Mizel, S.B., Shevachi, E.M., Malek, T.R., Dinarello, C.A., Lachman, L.B., and Janeway, C.A., Jr. 1984. Growth of a cloned helper T cell line induced by a monoclonal antibody specific for the antigen receptor: interleukin 1 is required for the expression of receptors for interleukin 2. J. Immunol. 133:1339.

Reem, G.H., and Yeh, N-H. 1984. Interleukin 2 regulates expression of its receptor and synthesis of gamma interferon by human T lymphocytes. Science 225:429.

Welte, K., Andreeff, M., Platzer, E., Holloway, K., Rubin, B.Y., Moore, M.S., and Mertelmann, R. 1984. Interleukin 2 regulates the expression of Tac antigen on peripheral blood T lymphocytes. J. Exp. Med. 160:1390.

Katzen, D., Chu, E., Terhost, C., Leung, D.Y., Gesner, M., Miller, R.A., and Geha, R.S. 1985. Mechanisms of human T cell response to mitogens: IL 2 induces IL 2 receptor expression and proliferation but not IL 2 synthesis in PHA-stimulated T cells. J. Immunol. 135:1840.

Johnson, H.M., and Farrar, W.L. 1983. The role of a gamma interferon-like lymphokine in the activation of T cells for expression of interleukin 2 receptors. Cell. Immunol. 75:154.

Scheurich, P., Ucer, U., Killian, M., and Pfizenmaier, K. Differential effects of gamma-interferon on human T cells during primary activation in vitro. In Cellular and Molecular Biology of Lymphokines. p.63-67. C. Sorg, A. Schimpl, and M. Landy eds. Academic Press, Orlando, FL.

Depper, J.M., Leonard, W.L., Kronke, M., Waldmann, T.A., and Greene, W.C. 1984. Augmented T cell growth fctor receptor expression in HTLV-1-infected human leukemic T cells. J. Immunol. 133:1691.

Sztein, M.B., Serrate, S.A., and Goldstein, A.L. 1986. Modulation of interleukin 2 receptor expression on normal human lymphocytes by thymic hormones. Proc. Natl. Acad. Sci. USA 83:6107.

Robb, R.J., Munck, A., and Smith, K.A. 1981. T-cell growth factors: quantification, specificity, and biological relevance. J. Exp. Med. 154:1455.

172.

173.

174.

175.

176.

177.

178.

179.

180.

181.

Uchiyama, T., Broder, S., and Waldmann, T. A. 1981. A monoclonal antibody (anti-Tac) reactive with activated and functionally mature human T cells. I. Production of anti-Tac monoclonal antibody and distribution of Tac(+) cells. J. Immunol. 126:1393.

Leonard, W.J., Depper, J.M., Uchiyama, T., Smith, K.A., Waldmann, T.A., and Greene, W.C. 1982. A monoclonal antibody that appears to recognize the receptor for human T-cell growth factor; partial characterization of the receptor. Nature 300:267.

Poiesz, B.J., Ruscetti, F.W., Gazdar, A.F., Bunn, P.A., Minna, J.D., and Gallo, R.C. 1980. Detection and isolation of type C retrovirus particles from fresh and cultured lymphocytes of a patient with cutaneous T-cell lymphoma. Proc. Natl. Acad. Sci. USA 77:7415.

Gootenberg, J.E., Ruscetti, F.W., Mier, J.W., Gazdar, A., and Gallo, R.C. 1981. Human cutaneous T cell lymphoma and leukemia cell lines produce and respond to T cell growth factor. J. Exp. Med. 154:1403.

Leonard, W.L., Depper, J.M., Robb, R.J., Waldmann, T.A., and Greene, W.C. 1983. Characterization of the human receptor for T-cell growth factor. Proc. Natl. Acad. Sci. USA 80:6957.

Wano, Y., Uchiyama, T., Fukui, K., Maeda, M., Uchino, H., and Yodoi, J. 1984. Characterization of human interleukin 2 receptor (Tac antigen) in nomal and leukemic T cells: co-expression of normal and aberrant receptors on HUT-102 cells. J. Immunol. 132:3005.

Udal, D.L., March, C.J., Gillis, S., Larsen, A., and Dower, S.K. 1984. Purification and chemical characterization of the receptor for interleukin 2 from activated human T lymphocytes and from a human T-cell lymphoma cell line. Proc. Natl. Acad. Sci. USA 81:6281.

Leonard, W.J., Depper, J.M., Kanshisa, M., Kronke, M., Peffer, N.J., Svetlik, P.B., Sullivan, M., and Greene, W.C. 1985. Structure of the human interleukin-2 receptor gene. Science 30:633.

Leonard, W.J., Depper, J.M., Kronke, M., Robb, R.J., Waldmann, T.A., and Greene, W.C. 1985. The human receptor for T-cell growth factor. J. Biol. Chem. 260:1872.

Robb, R.J., and Greene, W.C. 1983. Direct demonstration of the identity of T cell growth factor binding protein and the Tac antigen. J. Exp. Med. 158:1332.

182

183

184

185

186

187

188

189

190

191

192

Shackelford, D.A., and Trowbridge, I.S. 1986. Evidence for two extracellular domains in the human interleukin-2 receptor: localization of IL-2 binding. EMBO J. 5:3275.

Leonard, W.J., Depper, J.M., Crabtree, G.R., Rudikoff, S., Pumphrey, J., Robb, R.J., Kronke, M., Svetlik, P.B., Peffer, N.J., Waldmann, T.A., and Greene, W.C. 1984. Molecular cloning and expression of cDNAs for the human interleukin-2 receptor. Nature 311:626.

Nikaido, T., Shimizu, A., Ishida, N., Sabe, H., Teshigawara, K., Maeda, M., Uchiyama, T., Yodoi, J., and Honjo, T. 1984. Molecular cloning of cDNA encoding human interleukin-2 receptor. Nature 311:631.

Cosman, D., Cerretti, D.P., Larsen, A., Park, L., March, C., Dower, S., Gillis, S., and Udal, D. 1984. Cloning, sequence and expression of human interleukin-2 receptor. Nature 312:768.

Greene, W.C. 1986. The human interleukin-2 receptor. Ann. Rev. Immunol. 4:69.

Hatakeyama, M., Minamoto, S., Uchiyama, T., Hardy, R.R., Yamada, G., and Taniguchi, T. 1985. Reconstitution of functional receptor for human interleukin-2 in mouse cells. Nature 18:467.

Cosman, D., Wignall, J., Lewis, A., Alpert, A., Cerretti, D.P., Park, L., Dower, S.K., Gillis, S., and Urdal, D.L. 1986. High level stable expression of human interleukin-2 receptors in mouse cells generates only low affinity interleukin-2 binding sites. Mol. Immunol. 23:935.

Robb, R.J. 1986. Conversion of low-affinity interleukin 2 receptors to a high-affinity state following fusion of cell membranes. Proc. Natl. Acad. Sci. USA 83:3992.

Tsudo, M., Kozak, R.W., Goldman, C.K., and Waldmann, T.A. 1986. Demonstration of a non-Tac peptide that binds interleukin 2: a potential participant in a multichain interleukin 2 receptor complex. Proc. Natl. Acad. Sci. USA 83:9694.

Sharon, M., Klausner, R.D., Cullin, B.R., Chizzonite, R., and Leonard, W.J. 1986. Novel interleukin-2 receptor subunit detected by cross-linking under high-affinity conditions. Science 234:859.

Robb, R.J., Rusk, C.M., Yodoi, J., and Greene, W.C. 1987. Interleukin 2 binding molecule distinct from the Tac protein: analysis of its role in formation of high-affinity receptors. Proc. Natl. Acad. Sci. USA 84:2202.

193

194

195

196

197

198

199

200

201

202

203

204

Robb, R.J., and Greene, W.C. 1987. Internalization of interleukin 2 is mediated by the β chain of the high-affinity interleukin 2 receptor. J. Exp. Med. 165:1201.

Dukovich, M., Wano, Y., Thut, L.T.B., Katz, P., Cullen, B.R., Kehrl, J.H., and Greene, W.C. 1987. A second human interleukin-2 binding protein that may be a component of high-affinity interleukin-2 receptors. Nature 327:518.

Teshigawara, K., Wang, H-M., Kato, K., and Smith, K.A. 1987. Interleukin 2 high-affinity receptor expression requires two distict binding proteins. J. Exp. Med. 165:223.

Yodoi, J., Teshigawara, K., Nikaido, T., Fukui, K., Noma, T., Honjo, T., Takigawa, M., Saski, M., Minato, N., Tsudo, M., Uchiyama, T., and Maeda, M. 1985. TCGF (IL 2)-receptor inducing factors(s) I. Regulation of IL 2 receptor on a natural killer-like cell line (YT cells). J. Immunol. 134:1623.

Shirakawa, F., Tanaka, Y., Eta, S., Suzuki, H., Yodoi, J., and Yamashita, U. 1986. Effect of interleukin 1 on the expression of interleukin 2 receptor (Tac antigen) on human NK cells and NK-like cell line (YT cells). J. Immunol. 137:551.

Wang, H-M., and Smith, K.A. 1987. The interleukin 2 receptor: functional consequences of its bimolecular structure. J. Exp. Med. 166:1055.

Lowenthal, J.W., and Greene, W.C. 1987. Contrasting interleukin 2 binding properties of the α (p55) and β (p70) protein subunits of the human high-affinity interleukin 2 receptor. J. Exp. Med. 166:1156.

Siegel, J.P., Sharon, M., Smith, P.L., and Leonard, W.J. 1987. The IL-2 receptor β chain (p70): role in mediating signals for LAK, NK, and proliferative activites. Science 238:75.

Tanaka, T., Saiko, O., Doi, S., Negoro, S., and Kishimoto, S. 1988. Interleukin 2 functions through novel interleukin 2 binding molecule in T cells. J. Immunol. 140:470.

Tanaka, T., Saiki, O., Doi, S., Hatekeyama, M., Doi, T., Kono, T., Mori, H., Fujii, M., Sugammura, K., Negoro, S., Taniguchi, T., and Kishimoto, S. 1987. Functional interleukin 2 receptors on B cells lacking Tac antigens. Eur. J. Immunol. 17:1379.

Saiki, O., Tanaka, T., Doi, S., and Kishimoto, S. 1988. Expression and the functional role of a p70/75 interleukin 2-binding molecule in human B cell. J. Immunol. 140:853.

Lakhanpal, S., Gonchoroff, N.J., and Handwerger, B.S. 1987. Interleukin 2 induces proliferation of normal "resting" human T

205

206

207

208

209

210

211

212

213

214

cells in the absence of other known external stimulation. Cell. Immunol. 106:62.

Rubin, L.A., Kurman, C.C., Fritz, M.E., Biddison, W.E., Boutin, B., Yarchoan, R., and Nelson, D.L. 1985. Soluble interleukin 2 receptors are released from activated human lymphoid cells in vitro. J. Immunol. 135:3172.

Diamanstein, T., Osawa, H., Mouzaki, A., and Josimovic-Alasevic, O. 1986. Regulation of interleukin-2 receptor expression and receptor release. Mol. Immunol. 23:1165.

Robb, R.J., and Kutny, R.M. 1987. Structure-function relationships for the IL 2-receptor system: IV. Analysis of the sequence and ligand-binding properties of soluble Tac protein. J. Immunol. 139:855.

Pizzolo, G., Chilosi, M., Vinante, F., Dazzi, F., Lestani, M., Perona, G., Benedetti, F., Todschini, G., Vincenzi, C., Trentin, L., and Semenzato, G. Soluble interleukin-2 receptors in the serum of patients with Hodgkin's disease. Br. J. Cancer 55:427.

Nelson, D.L., Wagner, D.K., Marcon, L., Kurman, C.G., Fritz, M.E., Crisman, J.M., Casabo, L., and Rubin, L.A. 1987. An analysis of soluble interleukin-2 receptors in human neoplastic disorders. In Biotechnology in Clinical Medicine. p. 277-286. A. Albertini, C. Lenfant, and R. Paoletti eds. Raven Press, New York.

Kloster, B.E., John, P.A., Miller, L.E., Rubin, L.A., Nelson, D.L., Blair, D.C., and Tomar, R.H. 1987. Soluble interleukin 2 receptors are elevated in patients with AIDS or at risk of developing AIDS. Clin. Immunol. Immunopath. 45:440.

Rubin, L.A., Jay, G., and Nelson, D.L. 1986. The released interleukin 2 receptor binds interleukin 2 efficiently. J. Immunol. 137:3841.

Prince, H.E., and John, J.K. 1987. Abnormalities of interleukin 2 receptor expression associated with decreased antigen-induced lymphocyte proliferation in patients with AIDS and related disorders. Clin. exp. Immunol. 67:59

Vilcek, J., Henriksen-Destefano, D., Siegel, D., Klion, A., Robb, R.J., and Le, J. 1985. Regulation of IFN-γ induction in human peripheral blood cells by exogenous and endogenously produced interleukin 2. J. Immunol. 135:1851.

Farrar, W.L., Johnson, H.M., and Farrar, J.J. 1981. Regulation of the production of immune interferon and cytotoxic T lymphocytes by interleukin 2. J. Immunol. 126:1120.

215.

216.

217.

218.

219.

220.

221.

222.

223.

224.

225.

226.

Trinchieri, G., and Perussia, B. 1985. Immune interferon: a pleiotropic lymphokine with multiple effects. Immunol. Today 6:131.

Strassmann, G., Somers, S.D., Springer, T.A., Adams, D.O., and Hamilton, T.A. 1986. Biochemical models of interferon-τ mediated macrophage activation: independent regulation of lymphocyte function associated antigen (LFA)-1 and I-A antigen on murine peritoneal macrophages. Cell. Immunol. 97:110.

Shalaby, M.R., Aggarwal, B.B., Rinderknecht, E., Svedersky, L.P., Finkle, B.S., and Palladino, M.A., Jr. 1985. Activation of human polymorphonuclear neutrophil functions by interferon-τ and tumor necrosis factors. J. Immunol. 135:2069.

Utsugi, T., and Sone, S. 1986. Comparitive analysis of the priming effect of human interferon-τ, α, and β on synergism with muramyl dipeptide analog for anti-tumor expression of human blood monocytes. J. Immunol. 136:1117.

Friedman, R.M., and Vogel, S.N. 1983. Interferons with special emphasis on the immune system. Adv. Immunol. 34:41.

Sonnenfeld, G., Mandel, A., and Merigan, T.C. 1978. Time and dosage dependence of immunoenhancement by murine type II interferon preparations. Cell. Immunol. 40:285.

Boraschi, D., Censini, S., and Tagliabue, A. 1984. Interferon-τ reduces macrophage-suppressive activity by inhibiting prostaglandin E_2 release and inducing interleukin 1 production. J. Immunol. 133:764.

Frasca, D., Adorini, L., Landolfo, S., and Doria, G. 1985. Enhancing effect of IFN-τ on helper T cell activity and IL 2 production. J. Immunol. 134:3907.

Rosztoczy, I., Siroki, O., and Beladi, I. 1986. Effects of interferons-α, -β, and τ on human interleukin-2 production. J. Interferon Res. 6:581.

Rambaldi, A., Young, D.S., Herrmann, F., Cannistra, S.A., and Griffin, J.D. 1987. Interferon-τ induces expression of the interleukin 2 receptor gene in human monocytes. Eur. J. Immunol. 17:153.

Yip, Y.K., Pang, R.H.L., Urban, C., and Vilcek, J. 1981. Partial purification and characterization of human τ (immune) interferon. Proc. Natl. Acad. Sci. USA 78:1601.

Kelker, H.C., Le, J., Rubin, B.Y., Yip, Y.K., Nagler, C., and Vilcek, J. 1984. Three molecular weight forms of natural human interferon-τ revealed by immunoprecipitation with monoclonal antibody. J. Biol. Chem. 259:4301.

227

228

229

230

231

232

233

234

235

236

237

238

Rinderknecht, E., O'Connor, B.H., and Rodriguez, H. 1984. Natural human interferon-τ: complete amino acid sequence and determination of sites of glycosylation. J. Biol. Chem. 259:6790.

Gray, P.W., Leung, D.W., Pennica, D., Yelverton, E., Najarian, R., Simonsen, C.C., Derynck, R., Sherwood, P.J., Wallace, D.M., Berger, S.L., Levinson, A.D., and Goeddel, D.V. 1982. Expression of human immune interferon cDNA in E. coli and monkey cells. Nature 295:503.

Trent, J.M., Olsen, S., and Lawn, R.M. 1982. Chromosomal location of human leukocyte, fibroblast, and immune interferon genes by means of in situ hybridization. Proc. Natl. Acad. Sci. USA 79:7809.

Gray, P.W., and Goeddel, D.V. 1982. Structure of the human immune interferon gene. Nature 298:859.

Celada, A., Gray, P.W., Rinderknecht, E., and Schreiber, R.D. 1984. Evidence for a gamma-interferon receptor that regulates macrophage tumoricidal activity. J. Exp. Med. 160:55.

Rashidbaigi, A., Kung, H., and Peska, S. 1985. Characterization of receptors for immune interferon in U937 cells with ^{32}P-labeled human recombinant immune interferon. J. Biol. Chem. 260:8514.

Finbloom, D.S., Hoover, D.L., and Wahl, L.M. 1985. The characteristics of binding of human recombinant interferon-τ to its receptor on human monocytes and human monocyte-like cell lines. J. Immunol. 135:300.

Celada, A., Allen, R., Esparza, I., Gray, P.W., and Schreiber, R.D. 1985. Demonstration and characterization of the interferon-gamma receptor on human mononuclear phagocytes. J. Clin. Invest. 76:2196.

Anderson, P. Yip, Y.K., and Vilcek, J. 1982. Specific binding of ^{125}I-human interferon-τ to high affinity receptors on human fibroblasts. J. Biol. Chem. 257:11301.

Faltynek, C.R., Branca, A.A., McCandless, S., and Baglioni, C. 1983. Characterization of an interferon receptor on human lymphoblastoid cells. Proc. Natl. Acad. Sci. USA 80:3269.

Littman, S.J., Faltynek, C.R., and Baglioni, C. 1985. Binding of human recombinant ^{125}I-interferon τ to receptors on human cells. J. Biol. Chem. 260:1191.

Sakar, F.H., and Gupta, S.L. 1984. Receptors for human τ interferon: binding and crosslinking of ^{125}I-labeled recombinant human τ interferon to receptors on WISH cells. Proc. Natl. Acad. Sci. USA 81:5160.

2

2

2

2

2

Aguet, M., and Merlin, G. 1987. Purification on human γ interferon receptors by sequential affinity chromatography on immobilized monoclonal antireceptor antibodies and human γ interferon. J. Exp. Med. 165:988.

Vilcek, J., Klion, A., Henriksen-DeStefano, D., Zemtsov, A., Davidson, D.M., Davidson, M., Friedman, A., Friedman-Kien, A.E., and Le, J. 1986. Defective gamma-interferon production in peripheral blood leukocytes of patients with acute tuberculosis. J. Clin. Immunol. 6:146.

Murray, H.W., Masur, H., and Keithly, J.S. 1982. Cell-mediated immune response in experimental viseral leishmaniasis. I. Correlation between resistance to Leishmania donovani and lymphokine-generating capacity. J. Immunol. 129:344.

Sadick, M.D., Locksley, R.M., Tubbs, C., and Raff, H.V. 1986. Murine cutaneous leishmaniasis correlates with the capacity to generate interferon-γ in response to leishmania antigens in vitro. J. Immunol. 136:655.

Nogueira, N., Kaplan, G., Levy, E., Sarno, E.N., Kushner, P., Granelli-Piperno, A., Vieira, L., Gould, V.C., Levis, W., Steinman, R., Yip, Y.K., and Cohn, Z.A. 1983. Defective γ interferon production in leprosy: reversal with antigen and interleukin 2. J. Exp. Med. 158:2165.

CHAPTER 1

SUPPRESSION OF HUMAN LYMPHOCYTE RESPONSES BY *Trypanosoma cruzi*

abs
con
con
mar
fal
nor
at

ABSTRACT

rtually nothing is known about the basis for the immunosuppression sociated with human T.cruzi infection. We have used an in vitro stem to explore this effect. Incubation of human peripheral blood nonuclear cells (PBMC) with blood forms of T. cruzi abrogated their sponses to suboptimal, optimal and supraoptimal doses of Con A, PHA PWM whether or not monocytes were depleted. Killed parasites were t suppressive. Maximal suppression (74%) occurred when the parasites re present during the entire culture period (96-hr), although gnificant suppression (33%) was seen when the organisms were added , 48 or 72 hr after initiation, suggesting that the early stages of mphocyte activation had been impaired and that a second generation of ls was also affected. The 4-day supernatant medium of a T. cruzi spension supported PBMC responses to Con A as well as medium alone, licating that suppression did not result from parasite removal of ential nutrients. Furthermore, 96 hr after mitogenic stimulation proportions of viable PBMC in cultures containing or lacking the asites were comparable. Although T. cruzi binds Con A and PHA, this orption was not the cause of reduced responsiveness since optimal centrations of Con A and PHA remained in solution under our ditions. Levels of IL2 in PHA-stimulated PBMC cultures were kedly reduced in the presence of T. cruzi. However, exogenous IL2 led to restore lymphocyte responsiveness. T. cruzi neither absorbed inactivated IL2. Thus, the noted suppression appeared to involve least deficient production and utilization of IL2.

ca

du

cel

et

Ra

req

whi

Stu

evi

alt

Kie

Kie

(Ha

Tar

alt

dif

wou

stu

inc

wit

sta

incl

inte

INTRODUCTION

Experimental and human infections by Trypanosoma cruzi - the ausative agent of Chagas' disease - are accompanied (particularly uring the acute period) by severe alterations of the humoral and ellular arms of the immune system (Brener, 1980; Kuhn, 1981; Clinton t al, 1975; Teixeira et al, 1978; Maleckar & Kierszenbaum, 1983; amos, Schadtler-Siwon & Ortiz-Ortiz, 1979). This condition has been egarded as a means by which the parasite eludes immunological defences hile it establishes itself in the host (Brener, 1980; Kuhn, 1981). tudies with murine model systems of Chagas' disease have produced vidence suggesting several mechanisms of immunosuppression, including teration of accessory cell function (Cunningham & Kuhn, 1980; erszenbaum, 1982), reduced levels of T cells in the spleen (Hayes & erszenbaum, 1981) and altered lymphokine-producing ability arel-Bellan et al, 1983; Reed, Inverso & Roters, 1984, 1984a; rleton & Kuhn, 1983). In contrast, our knowledge of human lymphocyte terations in human T. cruzi infection is negligible and, given the fferences between murine and human Chagas' disease, extrapolations uld be unwarranted. In this work, an in vitro system was used to udy the effects of T. cruzi on human lymphoproliferative responses duced by mitogens. It will be shown in this paper that co-culture th the parasite suppresses human lymphocytes at a relatively early age of the activation process and that altered lymphocyte functions clude a markedly reduced capacity to both produce and utilize terleukin 2 (IL2).

Ar

Th

bl

sp

La

Pa

The

wer

wee

cer

(Bu

die

par

RPM

pen

susp

the

feta

tryp

Kier

1969

orga

phosp

MATERIALS AND METHODS

Animals

The 4-week-old Crl-CD1(ICR)BR Swiss mice used to maintain and produce blood forms of *T. cruzi* and the female Lewis rats used as a source of spleen cells to produce IL2 ($IL2_{rat}$) were purchased from Charles River Laboratory (Portage, MI).

Parasites

The Tulahuen strain of *T. cruzi* was used in this work. Trypomastigotes were purified from the blood of mice (infected intraperitoneally 2 weeks previously with 2 X 10^5 organisms) by density gradient centrifugation over a mixture of Ficoll-Hypaque of density 1.077 (Budzko & Kierszenbaum, 1974) followed by chromatography through a diethylaminoethyl-cellulose column (Villalta & Leon, 1979). The parasites were washed twice by centrifugation (800 X G, 20 min, 4°C) in RPMI 1640 medium containing L-glutamine (Gibco, Grand Island, NY), penicillin (100 units/ml) and streptomycin (100 µg/ml). Parasite suspensions were prepared at the desired concentration (see Results) in the same medium supplemented with 5% heat-inactivated (56°C, 20 min) fetal bovine serum (FBS, Gibco (RPMI+5%FBS). In some experiments, trypanosomes grown in cultures of rat heart myoblasts (Lima & Kierszenbaum, 1982) or epimastigotes grown in Warren's medium (Warren, 1969) were used. When killed blood trypomastigotes were needed, the organisms were incubated with 0.025% glutaraldehyde in phosphate-buffered saline (20°C, 2 min), washed by centrifugation,

quenched with 0.1M lysine in phosphate-buffered saline and washed twice with RPMI+5%FBS.

Mitogens

Concanavalin A (Con A), phytohemagglutinin (PHA) and pokeweed mitogen (PWM) were purchased from Sigma Chemical Co. (St. Louis, MO).

IL2 preparations

The IL2-containing supernatant used to maintain HT-2 cells (see below) was prepared by stimulating rat spleen cells (1 X 10^6 cells/ml) with 2 μg Con A/ml in the presence of 5 X 10^{-5}M 2-mercaptoethanol, using the medium described above. The supernatants were collected after incubating these cultures at 37°C and 5% CO_2 for 48 hr in an atmosphere saturated with water vapor, and stored at -20°C until used. This material will be referred to in the text as $IL2_{rat}$. Purified human IL2 ($IL2_{ph}$) was purchased from Collaborative Research (Lexington, MA).

Crude preparations of human IL2 ($IL2_{ch}$) consisted of the 48-hr supernatants of peripheral blood mononuclear cell (PBMC) (5 X 10^6 PBMC/ml) cultures stimulated with 25 μg PHA/ml (Tilden & Balch, 1982). In some cases, production of $IL2_{ch}$ in the presence or absence of T. cruzi was compared; the concentration of parasites, when present, was 5 X 10^6 organisms/ml and all other conditions remained the same.

Cells

The PBMC used in this work were from healthy volunteers. Their purification was by centrifugation over Lymphoprep (Nyegaard, Oslo) at 340 X G and 20°C for 45 min and they were washed three times with serum-free RPMI 1640 medium prior to use; cell viability, determined by trypan blue dye exclusion, was always >99%. THe final suspensions of

these cells were prepared in RPMI+5%FBS. The IL2-dependent HT-2 cell line (kindly provided by Dr. Phillippa Marrack from the University of Colorado Health Sciences Center, Denver, CO) was used to measure IL2 activity in biological fluids. These cells were maintained in RPMI+10%FBS at 37°C by mixing equal volumes of cell culture and the $IL2_{rat}$ preparation (see above).

Depletion of nonspecific-esterase-positive cells

Suspensions of PBMC (3.5 ml at 5 X 10^6 cells/ml) were incubated at 37°C (5% CO_2 incubator) for 1 hr in a 60-mm diameter sterile plastic petri dish. The nonadherent cells were removed and subjected to the same procedure once more, and then centrifuged (280 X G, 10 min, 4°C). The adherent, nonspecific-esterase- positive cells were further depleted by chromatography over a Sephadex G-10 (Pharmacia, Piscataway, NJ) column (Mishell, Mishell & Shigii, 1980). The nonspecific esterase test has been described (Yam, Li & Crosby, 1971).

Blastogenesis assay

Cell cultures were set up in triplicate in 96-well microculture plates. Each culture contained 1.25 X 10^5 PBMC and the appropriate mitogen concentration (see Results) in a total volume of 0.1 ml. When parasites or other reagents were to be present, they were contained in 0.025 ml and substituted for the equivalent volume of RPMI+5%FBS. All cultures were incubated at 37°C and 5% CO_2 for 96 hr (unless otherwise stated) and pulsed with 1 μCi ^{3}H-thymidine (specific activity 2 mCi/mmole, Amersham, Arlington Heights, IL) during the last 24 hr. Cultures were interrupted by harvesting (MASH II, M.A. Bioproducts,

P

I

A

o

f

b

o

M

C

e

0.

m

(5

C

s

T.

S

a

Walkersville, MD) and radioactivity was measured in a liquid scintillation spectrometer.

Absorption of Con A solutions with T. cruzi

Solutions of Con A (concentrations described under Results) were incubated with 5 X 10^6 blood forms of T. cruzi per milliliter at 37°C (CO_2 incubator) for 24 hr. The parasites were then removed by filtration through sterile 0.22-μm Millipore filters (Bedford, MA). The filtrate was used as the culture medium in blastogenesis assays to test PBMC responses to the residual amount of mitogen.

Incubation of RPMI+5%FBS with T. cruzi

After incubating RPMI+5%FBS medium with or without 5 X 10^6 blood forms of T. cruzi per milliliter at 37°C (CO_2 incubator) for 4 days and filtration (0.22 μm pore size), the filtrates were used in blastogenesis assays to test PBMC responses to various concentrations of Con A.

Measurement of IL2 activity

Cultures of HT-2 cells were set up in triplicate in microculture wells, each containing 4 X 10^3 cells. The final volume of these cultures was 0.2 ml, including 0.1 ml of two-fold dilutions of the biological material to be tested. The cultures were incubated at 37°C for 48 hr (5% CO_2) and pulsed with 1 μCi 3H-thymidine during the last 24 hr. Cell harvesting and measurement of radioactivity incorporated into synthesized DNA was as described above.

T. cruzi incubation with $IL2_{ch}$

Solutions of $IL2_{ch}$ were incubated with purified blood trypomastigotes at final concentrations varying from 1.25 X 10^6 to 2 X 10^7 organisms/ml

at 3

ster

acti

were

abse

Pres

Each

sent

resu

Diff

sign

at 37°C for 48 hr. After removing the parasites by filtration through sterile 0.22-μm-pore-size filters, the filtrates were tested for IL2 activity as described above. For control purposes, aliquots of $IL2_{ch}$ were subjected to the same conditions except that the parasites were absent.

Presentation of results and statistical analysis

Each set of results presented in the tables is typically representative of two to four experiments with a similar protocol. The results represent the mean of triplicate determinations ± 1 SEM. Differences between means were considered to be statistically significant if $P \leq 0.05$ by Student's "t" test.

S
W
s
A
s
d
T
a
p
p
o
t
a
r

e
w
s

c
c
p
h
a

RESULTS

Suppression of PBMC responses to mitogens by T. cruzi

When present in the cultures, purified blood forms of T. cruzi suppressed PBMC responses to Con A (Table 1). The concentration of Con A producing optimal responses varied among repeat experiments (data not shown), probably due to the use of PBMC from different donors and different batches of the mitogen. However, significant suppression by T. cruzi was observed in all experiments. Although in some experiments a significant reduction of PBMC responses to the tested mitogens was produced with 2.5×10^6 blood forms/ml, the minimal concentration of parasites causing such effect in most experiments was 5×10^6 organisms/ml and was used in all subsequent experiments. Of interest, tissue culture-derived trypomastigotes and epimastigotes grown in an axenic medium also suppressed Con A-induced lymphoproliferative PBMC responses (data not shown).

The suppressive effect of blood trypomastigotes was also seen when either PHA or PWM were used to stimulate the PBMC and occurred over a wide range of mitogen concentrations, including suboptimal, optimal and supraoptimal doses (Table 2).

Since T. cruzi can bind Con A and PHA (Pereira et al., 1980), we considered the possibility that the parasite might have reduced the concentration of these mitogens to suboptimal levels. To test this possibility, PBMC were stimulated with solutions of Con A or PHA which had been either absorbed with 5×10^6 organisms/ml for 24 hr or mock-absorbed without parasites. Absorption of Con A solutions with

Table 1. Suppression of Con A-induced PBMC

Table 1. Suppression of Con A-induced PBMC responses by blood forms of T. cruzi

Parasite concentration (organisms/ml)	c.p.m. ($\times 10^{-3}$) obtained with Con A at the following concentrations (µg/ml)			
	0	4	8	16
0	7.0 ± 0.1	44.4 ± 1.0	35.2 ± 0.8	23.8 ± 0.3
2.5×10^6	6.7 ± 0.2	33.0 ± 0.9	35.0 ± 0.4	10.1 ± 0.1
5.0×10^6	4.6 ± 0.2	15.4 ± 0.2*	10.1 ± 0.1*	0.5 ± 0.2*
7.5×10^6	2.7 ± 0.2	8.7 ± 1.1*	15.1 ± 0.2*	0.7 ± 0.1*

The cultures were incubated for 96 hr and were pulsed with 1 µCi ^{3}H-thymidine during the last 24 hr; the parasites were added at zero time, i.e., immediately after the mitogen.

*$P \leq 0.05$, with respect to the control value (no parasites present).

Table 2. Suppression of PBMC responses induced with suboptimal, optimal and supraoptimal concentrations of Con A, PHA or PWM by blood forms of T. cruzi

Mitogen	Mitogen concent. (μg/ml)	^{3}H-Thymidine incorporation (cpm X 10^{-3}) Parasites absent	Parasites present
Con A	0	1.4 ± 0.2	1.6 ± 0.4
	0.4	14.4 ± 1.0	1.4 ± 0.1[1]
	4	45.2 ± 2.9	2.0 ± 0.1[1]
	8	40.5 ± 1.0	2.9 ± 0.0[1]
	16	1.9 ± 0.6	1.1 ± 0.1
PHA	0	0.7 ± 0.1	2.2 ± 0.2
	6.3	27.6 ± 1.0	1.3 ± 0.1[1]
	12.5	18.7 ± 0.2	0.3 ± 0.1[1]
	25	42.9 ± 1.6	5.7 ± 0.2[1]
	50	26.8 ± 0.3	2.3 ± 0.3[1]
PWM	0	0.2 ± 0.0	0.1 ± 0.0
	2.5	3.3 ± 0.4	0.4 ± 0.0[2]
	5	2.9 ± 0.1	0.9 ± 0.1[2]
	10	2.8 ± 0.2	1.3 ± 0.1[2]

The experiments with each mitogen were conducted separately.

[1,2] $p \leq 0.001$ and $p \leq 0.05$, respectively, for reductions in cpm with respect to the corresponding control value (parasites absent).

T
c
H
c
S
a
nu
re
lo
me
cr
in
pr
st
va
77
va
cel
wer
PBM
fro
of
Thu
Con

T. cruzi shifted peak responses towards the higher levels (Table 3), corroborating the ability of the parasite to bind this mitogen. However, enough mitogen remained in the solutions which initially contained 6 or 8 μg Con A/ml to induce optimal PBMC responses. Significant PBMC stimulation was also produced by solutions of PHA after absorption with T. cruzi.

Also considered were the possibilities a) that T. cruzi consumed nutrients required for optimal lymphocyte proliferation and b) that reduced levels of ^{3}H-thymidine incorporation resulted from a greater loss of PBMC viability due to the presence of T. cruzi. A conditioned medium which had been incubated with a suppressive concentration of T. cruzi for 96 hr was as effective in supporting ^{3}H-thymidine incorporation by PBMC as mock-absorbed medium (Table 4). When the proportions of trypan-blue-excluding PBMC were determined in Con A-stimulated cultures at the end of the 96-hr incubation period, the values obtained in the absence of T. cruzi in repeat experiments were 77 to 83% whereas in the presence of the organisms the corresponding values were 72 to 74%.

We also investigated whether monocytes/macrophages, whose accesory cell function may have been altered upon their infection by T. cruzi, were a requirement for parasite-induced suppression to occur. When PBMC populations whose monocyte/macrophage contents had been reduced from 6-9.7% to <0.7% were stimulated with Con A or PHA in the presence of T. cruzi, their responses were still significantly suppressed. Thus, the lymphocyte responses in the presence of medium alone, 8 μg Con A/ml and 25 μg PHA/ml were 4002 ± 1618, 29,768 ± 900 and 52,743 ±

Table 3. Mitogenic capacity of solutions before and after absorption with a suppressive concentration of T. cruzi

Mitogen	^{3}H-Thymidine incorporation (cpm x 10^{-3}) after	
	Mock absorption	T. cruzi absorption
None	7.6 ± 0.4	
Con A 4 μg/ml	21.1 ± 2.3	5.1 ± 1.4
Con A 6 μg/ml	6.3 ± 0.3	19.5 ± 1.0
Con A 8 μg/ml	6.5 ± 0.3	17.0 ± 1.0
None	7.7 ± 0.5	
PHA 5 μg/ml	55.5 ± 0.2	50.6 ± 3.3
PHA 7.5 μg/ml	55.9 ± 1.2	45.7 ± 3.6
PHA 10 μg/ml	55.4 ± 1.5	42.4 ± 3.1

The solutions of Con A and PHA were mock-absorbed (same physical treatments, no parasites) or absorbed with 5 X 10^6 parasites/ml for 24 hr, filtered through 0.22-μm-pore-size filters, and then used to stimulate PBMC in 96-hr cultures in the absence of parasites. The cultures were pulsed with 1 μCi ^{3}H-thymidine during the last 24 hr.

Tab

res

Con	
(µg	
0	
4	
6	
8	

The

whi

X 1

puls

Table 4. Ability of RPMI+5%FBS medium to support Con A-induced responses after incubation with T. cruzi

Con A (μg/ml)	^{3}H-thymidine incorporation (cpm X 10^{-3}) in Untreated medium	Medium preincubated with parasites
0	3.5 ± 0.1	3.3 ± 0.1
4	24.9 ± 0.6	21.9 ± 0.3
6	31.5 ± 0.9	23.1 ± 0.4
8	31.1 ± 3.9	19.0 ± 0.6

The 96-hr PBMC cultures were performed in the absence of T. cruzi. The culture media consisted of filtered (0.22-μm filter) RPMI+5%FBS which had been incubated in the absence ("Untreated") or presence of 5 X 10^6 parasites/ml. Con A was added at zero time. The cultures were pulsed with 1 μCi ^{3}H-thymidine during the last 24 hr.

1443 cpm, respectively, whereas in the presence of 5 x 10^6 parasites/ml the responses amounted to 3832 ± 1133, 17,248 ± 496 and 15,367 ± 348 cpm, respectively.

No suppression was seen when gluteraldehyde-killed blood trypomastigotes were substituted for living organisms in the PBMC cultures (data not shown).

Experiments were then designed to establish the period of time during which the suppressive effect of the parasite was exerted. In these PBMC cultures, trypomastigotes were added at various times after mitogenic stimulation. Maximal suppression was produced when the organisms were present in the cultures from the beginning (zero time), although significant suppression occurred when the parasite was incorporated into the PBMC cultures 24, 48 or 72 hr later (Table 5).

Effect of T. cruzi on IL2 production and utilization

Since IL2 is produced by stimulated T cells and plays a key role in lymphocyte proliferation, we set out to establish whether T. cruzi suppressed PBMC responses by affecting IL2 production. Levels of IL2 were measured after 48 hr of PBMC incubation with 25 μg/ml PHA in the presence or absence of 5 x 10^6 blood trypomastigotes per ml. As shown in Table 6, the levels of IL2 activity found in the filtrates of PHA-stimulated PBMC cultures were significantly smaller when the parasites were present. If T. cruzi suppressed mitogen-induced responses by PBMC merely by impairing IL2 production, exogenous IL2 should correct the deficiency, as was seen by investigators who studied antibody production to T. cruzi-unrelated antigens by lymphocytes from infected mice (Reed et al, 1984,1984a; Tarleton & Kuhn, 1983).

Table 5. Effects of addition of *T. cruzi* at different times after PBMC stimulation with Con A

Time of addition of *T. cruzi* (hr)	^{3}H-thymidine incorporation (cpm X 10^{-3})		
	PBMC alone	PBMC + *T. cruzi*	(%R)[1]
0	43.4 ± 1.2	11.2 ± 0.9	(74.2)
24	45.0 ± 2.2	30.0 ± 0.7	(33.3)
48	47.4 ± 1.3	31.1 ± 0.7	(33.4)
72	41.5 ± 0.4	27.7 ± 1.7	(33.3)

Ninety-six-hr cultures; stimulated with 6 μg Con A/ml and pulsed with 1 μCi ^{3}H-thymidine during the last 24 hr.

[1] %R, percent reduction in cpm due to the presence of parasites. All %R values represent statistically significant reductions in cpm ($P \leq 0.05$).

Table 6. Reduced production of IL 2 by PBMC incubated with T. cruzi

Material tested	^{3}H-thymidine incorporation (c.p.m. X 10^{-3}) by HT-2 cells grown in the presence of the material tested diluted*				
	Undiluted	1:2	1:4	1:8	1:16
PHA	1.3 ± 0.3	2.6 ± 0.0	1.5 ± 0.2	2.3 ± 0.6	2.3 ± 0.4
PBMC+PHA	28.1 ± 1.0	17.6 ± 2.0	7.3 ± 1.0	3.7 ± 0.5	2.2 ± 0.2
PBMC+PHA+T. cruzi	2.9 ± 0.7*	2.4 ± 0.8†	1.3 ± 0.3†	2.1 ± 0.4	0.9 ± 0.0†

The tested materials consisted of 48-hr supernatants of PBMC cultures (5 X 10^6 PBMC/ml) stimulated with 25 µg PHA/ml in the absence (PBMC+PHA) or presence (PBMC+PHA+T. cruzi) of 5 X 10^6 parasites/ml. The HT-2 cell cultures were incubated with these solutions for 48 hr. The cultures were pulsed with 1 µCi ^{3}H-thymidine during the last 24 hr. "PHA" was a solution of the mitogen incubated without cells for 48 hr.

*, † $P \leq 0.001$ and $P \leq 0.05$, respectively, difference with respect to the value obtained with PBMC+PHA.

However, exogenous $IL2_{ph}$ failed to restore PBMC responsiveness to Con A in experiments in which the concentrations of the lymphokine was either 10 units/ml or 114 units/ml (Table 7). These results led us to examine the possibility that the parasites were absorbing IL2, making it unavailable to the PBMC. Experiments were conducted in which $IL2_{ch}$ (produced under the same conditions as used to elicit PBMC responses with PHA) was incubated with suppressive concentrations of T. cruzi. The results showed that 5×10^6 organisms/ml did not remove significant amounts of IL2 activity (Table 8). Similar results were obtained when the parasite concentration was increased up to four-fold (data not shown).

Ability of exogenous IL 2_{ph} to restore Con A responsiveness of PBMC

Exp.No.	Con A (μg/ml)	IL 2 (units/ml)	^{3}H-thymidine incorporation (c.p.m. X 10^{-3}) by PBMC in the presence of			
			Con A	Con A+IL 2_{ph}*	Con A+*T. cruzi*	Con A+*T. cruzi*+IL 2_{ph}
1	0	10	1.4 ± 0.2	0.7 ± 0.1	1.6 ± 0.4	2.1 ± 0.3
	4	10	45.2 ± 2.9	39.5 ± 5.3	2.0 ± 0.1†	1.8 ± 0.9†
	8	10	40.5 ± 1.0	25.5 ± 4.8	2.9 ± 0.1†	2.4 ± 0.8†
2	0	114	0.5 ± 0.3	5.2 ± 0.1	0.5 ± 0.2	1.1 ± 0.2
	4	114	22.4 ± 2.1	26.2 ± 7.7	0.7 ± 0.1*	1.1 ± 0.2*
	8	114	37.9 ± 5.1	NA¥	1.6 ± 0.5*	0.7 ± 0.1*

* IL 2_{ph} was present during the 96-hr culture period.

† $P \leq 0.001$, difference with respect to the value obtained with Con A alone or Con A+IL 2_{ph}.

¥ NA, datum not available.

Table 8. T. cruzi does not absorb or consume IL 2

IL 2_{ch} dilution	^{3}H-thymidine incorporation (c.p.m. X 10^{-3}) by HT-2 grown in the presence of			
	IL 2 before absorption	IL 2 after absorption with T. cruzi at		
		1.25×10^{6}	2.5×10^{6}	5×10^{6}
		(organisms/ml)		
1/16	44.9 ± 2.5	42.8 ± 0.7	44.1 ± 0.6	40.1 ± 2.4
1/32	27.3 ± 2.8	23.2 ± 2.3	25.9 ± 0.2	22.5 ± 1.9
1/64	12.0 ± 2.0	10.1 ± 0.3	11.9 ± 0.7	10.8 ± 0.9

Aliquots of the IL 2_{ch} preparation were incubated with T. cruzi for 48 hr and filtered through 0.22-µm-pore-size filters before used. The IL 2 assay was as described under Table 6.

DISCUSSION

Our work produced results showing that living but not killed T. cruzi can suppress human lymphocyte responses to a variety of mitogens and established experimental conditions to explore the possible mechanism(s).

Although T. cruzi is known to absorb Con A and PHA (Pereira et al., 1980), two independent findings indicated that the parasite did not reduce PBMC responses by making less mitogen available to them. First, the suppressive effect of T. cruzi was seen over a wide range of mitogen concentrations, including supraoptimal levels (Table 2), minimizing the possibility that mitogen absorption solely accounted for the reduced responses. Second, optimally stimulatory levels of Con A and PHA remained in solutions of these mitogens after absorption with 5 x 10^6 parasites/ml (Table 3). We could also rule out the possibility that T. cruzi competed with the PBMC for essential nutrients because culture medium incubated with a suppressive parasite concentration supported blastogenisis as well as mock-treated medium (Table 4).

Since parasite-induced suppression was observed with PBMC preparations before and after depletion of nonspecific-esterase-positive cells, which includes monocytes and macrophages, it would appear that the parasite could directly affect lymphoid cells. However, the possibility that diminished accessory cell activity resulting from monocyte/macrophage infection contributes to the noted suppression can not be ruled out.

The extent of suppression of Con A-induced PBMC responses was greater when the parasites were incorporated into the cultures at zero

time -i.e., together with the mitogen- than when added after 24, 48 or 72 hr (Table 5). These observations suggested that T. cruzi interfered with the early stages of lymphocyte activation and that cells which had undergone activation in the absence of the parasites were less or no longer susceptible to the suppressive effect. However, the reduced PBMC responses seen when these cells were mixed with the trypomastigotes 24, 48 or 72 hr after initation of the cultures were statistically significant, and probably reflected a suppressive effect of the parasites on lymphocytes activated by the mitogen at times later than 0 time, including a second generation of cells responding to the mitogen.

We found lower levels of IL2 activity in the supernatants of PHA-stimulated PBMC when T. cruzi was present (Table 6). Reduced IL2 activity has also been reported by investigators studying suppressed in vitro antibody production by lymphocytes from T. cruzi-infected mice (Reed et al, 1984, 1984a; Tarleton & Kuhn, 1983). However, we were unable to restore PBMC responses to Con A when exogenous $IL2_{ph}$ was added even at a relatively high concentration (114 units/ml) (Table 7). In this respect, our results with human PBMC would seem to differ from those obtained by others with spleen cells from T. cruzi-infected mice (Reed et al., 1984, 1984a; Tarleton & Kuhn, 1983), with which a certain degree of restoration was afforded by adding IL2. This apparent disagreement might be rooted in differences between species or be due to the use of different assay systems: the induction of antibody-forming cells by antigens administered to infected hosts was measured in the work with the mouse cells (Reed et al., 1984, 1984a: Tarleton &

Kuhn, 1983) whereas our assay measured proliferative responses of normal human lymphocytes to mitogens. It should be noted, however, that Harel-Bellan et al. (1983), who used T. cruzi-infected mouse spleen cells to measure Con A-induced lymphoproliferative responses could not restore the responsiveness of these cells with exogenous IL2. Whether IL2 can correct some but not all types of lymphocyte alterations caused by T. cruzi infection or by the addition of this parasite to cell cultures is an interesting question deserving further attention. The failure of exogenous IL2 to restore the lymphoproliferative capacity of the PBMC might have been due to a) absorption or consumption of IL2 by T. cruzi, b) an irreversible PBMC alteration, c) a reduced capacity of PBMC to bind or respond to IL2, and/or d) a need for additional cytokines whose production might have also been altered. Since absorption with up to 2×10^7 parasites/ml did not remove significant amounts of IL2 activity, removal of this lymphokine by T. cruzi seemed unlikely. On this basis, reduced levels of IL2 activity in PHA-stimulated PBMC cultures containing the parasite would probably be due to reduced production. The other three possibilities remain open subjects for further studies.

ACKNOWLEDGEMENTS

This work was supported by grant AI 14848 from the United States Public Health Service.

REFERENCES

BRENER Z. (1980) Immunity to Trypanosoma cruzi. Adv. Parasitol. 18, 247.

BUDZKO D. B. & KIERSZENBAUM F. (1974) Isolation of Trypanosoma cruzi from blood. J. Parasitol. 60, 1037.

CLINTON B. A., ORTIZ-ORTIZ L., GARCIA W., MARTINEZ T. & CAPIN R. (1975) Trypanosoma cruzi: early immune response in infected mice. Exp. Parasitol. 37, 417.

CUNNINGHAM D. S. & KUHN R.E. (1980) Trypanosoma cruzi-induced suppression of the primary immune response in murine cell cultures to T cell-dependent and -independent antigens. J. Parasitol. 66, 16.

HAREL-BELLAN A., JOSKOWICZ M., FRADELIZI D. & EISEN H. (1983) Modification of T cell proliferation and interleukin 2 production in mice infected with Trypanosoma cruzi. Proc. Natl. Acad. Sci. (U.S.A.) 80, 3466.

HAYES M. M. & KIERSZENBAUM F. (1981) Experimental Chagas' disease: kinetics of lymphocyte responses and immunological control of the transition from acute to chronic Trypanosoma cruzi infection. Infect. Immun. 31, 1117.

LIMA M. F. & KIERSZENBAUM F. (1982) Biochemical requirements for intracellular invasion by Trypanosoma cruzi: protein synthesis. J. Protozool. 29, 566.

KIERSZENBAUM F. (1982) Immunologic deficiency during experimental Chagas' disease (Trypanosoma cruzi infection): role of adherent, nonspecific esterase-positive splenic cells. J. Immunol. 129, 2202.

KUHN R. E. (1981) Immunology of Trypanosoma cruzi infections. In: Parasitic Diseases Vol. 1 (ed. by J. M. Mansfield), p. 137. Marcel Dekker, New York.

MISHELL B. B., MISHELL R. I. & SHIGII J. M. (1980) Adherence. In: Selected Methods in Cellular Immunology (eds. B. B. Mishell and S. M. Shigii), p. 175. Freeman, San Francisco.

MALECKAR J. R. & KIERSZENBAUM F. (1983) Inhibition of mitogen-induced proliferation of mouse T and B lymphocytes by bloodstream forms of Trypanosoma cruzi. J. Immunol. 130, 908.

PERIERA M. E. A., LOURES M. A., VILLALTA F. & ANDRADE A. F. B. (1980) Lectin receptors as markers for Trypanosoma cruzi. Developmental stages and a study of the interaction of wheat germ agglutinin

with sialic acid residues on epimastigote cells. J. Exp. Med. 152, 1375.

RAMOS C., SCHADTLER-SIWON I. & ORTIZ-ORTIZ L. (1979) Suppressor cells present in the spleens of Trypanosoma cruzi-infected mice. J. Immunol. 122, 1243.

REED S. G., INVERSO J. A. & ROTERS S. B. (1984) Heterologous antibody responses in mice with chronic T. cruzi infection: depressed T helper function restored with supernatants containing interleukin 2. J. Immunol. 133, 1558.

REED S. G., INVERSO J. A. & ROTERS S. B. (1984b) Suppressed antibody responses to sheep erythrocytes in mice with chronic Trypanosoma cruzi infections are restored with interleukin 2. J. Immunol. 133, 3333.

TARLETON R. L. & KUHN R. E. (1983) Restoration of in vitro immune responses of spleen cells from mice infected with Trypanosoma cruzi by supernatants containing interleukin 2. J. Immunol. 133, 1570.

TEIXERIRA A. R. L., TEIXEIRA G., MACEDO V. & PRATA A. (1978) Acquired cell-mediated immunodepression in acute Chagas' disease. J. Clin. Inv. 62, 1132.

TILDEN A. B. & BALCH C. M. (1982) A comparison of PGE_2 effects on human suppressor cell function and on interleukin 2 function. J. Immunol. 129, 2469.

VILLALTA F. & LEON W. (1979) Effect of purification by DEAE-cellulose column on infectivity of Trypanosoma cruzi blood forms. J. Parasitol. 65, 88.

WARREN L. G. (1960) Metabolism of Schizotrypanum cruzi Chagas. I. Effects of culture age and substrate concentration on respiratory rate. J. Parasitol. 46, 529.

YAM L. T., LI C. Y. & CROSBY W. H. (1971) Cytochemical identification of monocytes and granulocytes. Am. J. Clin. Pathol. 55, 283.

CHAPTER 2

Trypanosoma cruzi inhibits interferon-γ production by mouse spleen cells but not human peripheral blood lymphocytes

ABSTRACT

Acute Trypanosoma cruzi infection is accompanied by immunosuppression and co-culture of the parasite with mouse or human lymphocytes curtails the proliferative capacity of these cells. As a part of our studies to define how T. cruzi affects lymphocyte functions, we examined in this work the interferon-τ (IFN-τ)-producing capacity of phytohemagglutinin-stimulated mouse spleen cells and human peripheral blood mononuclear cells in the presence and absence of the parasite. The levels of IFN-τ in the supernatants of parasite-mouse spleen cell co-cultures were significantly lower than those found in the supernatants of control cultures lacking the parasite. This decrease was observed at both 48 and 72 h after mitogenic stimulation and was not due to absorption or inactivation of the lymphokine by the parasite since incubation of a solution of recombinant IFN-τ with T. cruzi did not reduce antiviral activity. The T. cruzi-induced suppression of mouse spleen cell proliferation was not overcome by the addition of IFN-τ to these cultures nor was exogenous IFN-τ able to enhance the restorative effect of interleukin 2. Thus, deficient IFN-τ production did not appear to play a causative role in the reduced proliferative response of the spleen cells. In contrast with the mouse cell cultures, no significant decrease in IFN-τ production was seen in human peripheral blood mononuclear cell cultures containing a parasite concentration which decreased murine IFN-τ levels; yet the proliferative capacity of the human cells in response to phytohemagglutinin was reduced. These results denote the ability of T. cruzi to inhibit IFN-τ

production by mouse spleen cells and reveal a notable difference in the process of immunosuppression of mouse spleen cells and human peripheral blood mononuclear cells by T. cruzi.

INTRODUCTION

The acute phase of Trypanosoma cruzi infection in mice is accompanied by several manifestations of immunosuppression, including decreased interleukin 2 (IL2) production and a reduction in mitogen-induced lymphocyte proliferation (8-10,13,22,23,32). The parasite also suppresses the capacity of normal mouse spleen cells to divide in vitro after mitogen stimulation (14). The binding of IL2 to its receptor on T lymphocytes triggers a number of intracellular events, including stimulation of IFN-τ production by T cells (5,24,35) and the transduction of a signal for cell division (reviewed in 29). Since IL2 production by mouse spleen cells is decreased by T. cruzi, it is thus possible that IFN-τ synthesis may also be inhibited.

IFN-τ plays an important role in host defense against microbial invasion (reviewed in Ref. 7 and 34), and enhances the in vitro killing of intracellular parasites, such as Toxoplasma gondii (17,19), Leishmania donovani (16) and T. cruzi (21,37), by macrophages. In vivo, IFN-τ acts synergistically with anti-T. cruzi antibodies to decrease parasitemia and prolong the survival of infected mice (20). This lymphokine also affects the proliferative response of lymphocytes to mitogens. In addition to its well-known growth inhibitory functions (reviewed in Refs. 7 and 34), IFN-τ may also enhance T cell activity (2,6,12,25,27), depending on the dosage and time of administration (31).

Given the roles of IFN-τ in host defense and lymphoproliferation, we have examined whether T. cruzi can alter production of this

important lymphokine by normal murine or human lymphocytes and, if so, whether this alteration plays a role in the suppression of lymphocyte proliferation.

MATERIALS AND METHODS

Parasites. Trypomastigotes of T. cruzi (Tulahuen isolate) were purified from the blood of Crl-CD1(ICR)BR Swiss mice (Charles River Laboratory, Portage, MI) infected intraperitoneally two weeks previously with 2×10^5 organisms. The parasites were purified by density gradient centrifugation over a mixture of Ficoll-Hypaque of density 1.077 (3) followed by diethylaminoethyl-cellulose chromatography (36). After two washings by centrifugation (800 x g, 20 min, 4°C), the parasites were resuspended at the desired concentration in RPMI 1640 medium (Gibco, Grand Island, NY) containing 100 units penicillin and 100 μg streptomycin per ml, and either 2.5 or 5% heat-inactivated fetal bovine serum (56°C, 20 min) (RPMI+2.5%FBS or RPMI+5%FBS, respectively).

Murine spleen cells (mSC). Suspensions of mSC from inbred CBA/J mice (Jackson Laboratories, Bar Harbor, ME) were prepared as described previously (14) and resuspended at a final concentration of 2.5×10^6 mSC/ml in RPMI+2.5%FBS.

Human peripheral blood mononuclear cells (hPBMC). The hPBMC were isolated from the blood of healthy donors by centrifugation over Ficoll-Hypaque (350 x g, 45 min, 20°C). After three washings (350 x g, 10 min, 4°C) in serum-free RPMI 1640 medium, the hPBMC were resuspended at 1.25×10^6 cells/ml in RPMI+5%FBS. Cell viability, determined by trypan blue dye exclusion, was always >99%.

Co-culture conditions. Suspensions of mSC were incubated in the presence or absence of 5 μg/ml phytohemagglutinin (PHA-P; Sigma

Chemical Co., St. Louis, MO) with or without 2.5 x 10^6 T. cruzi/ml, unless otherwise noted. The cultures were incubated at 37°C (5% CO_2) for the desired periods of time (see Results). Cultures of hPBMC were treated similarly except that the final parasite concentration was 5 x 10^6 organisms/ml. These concentrations of T. cruzi were selected because they represent the minimal levels which consistently produce immunosuppression under optimal stimulatory conditions for mSC and hPBMC (1; Beltz and Kierszenbaum, unpublished results).

Measurement of IFN-γ. Cultures of mSC or hPBMC were incubated in 24-well plates in a volume of 1 ml for 48 or 72 h under the conditions described in the preceding paragraph. Cells and parasites were removed by passage through 0.22-μm-pore-size filters and the filtrates were stored at -70°C until assayed for IFN-γ. Murine IFN-γ activity was determined by a plaque reduction assay using mouse L-929 cells and the Indiana strain of bovine vesicular stomatitis virus (30). The titer was expressed as units/ml corresponding to the reciprocal of the highest dilution to reduce plaques by 50%. In this assay, one unit was equivalent to 0.88 NIH G-002-904511 reference units. Identification of the antiviral activity as IFN-γ was provided by its lability at pH 2 and inhibition by anti-murine IFN-γ antibodies (a gift of Dr. E. Havell, Trudeau Institute, Saranac, NY). Human IFN- was assayed using a radioimmunoassay kit (Centocor, Malvern, NY). This system uses two antibodies directed at different epitopes of IFN-γ and is designed to detect only biologically active IFN-γ.

Absorption of murine IFN-γ. Recombinant murine IFN-γ (specific activity = 2.3 X 10^7 units/mg protein; a gift from Genentech Inc.,

South San Francisco, CA) was incubated in 24-well plates at a concentration of 500 units/ml in RPMI+2.5%FBS in the presence or absence of 5 or 10 x 10^6 T. cruzi/ml at 37°C for 48 h. After passage of the supernatants through 0.22-μm-pore-size filters, residual IFN-τ activity was determined as described above.

Lymphocyte proliferation assays. Cultures of mSC or hPBMC were incubated in the presence or absence of T. cruzi in 96-well plates in a volume of 0.1 ml in the manner described under Co-culture conditions. Exogenous recombinant murine IFN-τ, partially purified human IFN-τ (Meloy Laboratories, Springfield, VA), and/or recombinant glycosylated human IL2 (Genzyme, Boston, MA) were added to some of the cultures at the desired concentrations (see Results). The lymphokines, when added to the cultures, replaced an equivalent volume of medium. The cultures were pulsed with 1 μCi ^{3}H-thymidine (specific activity = 2.0 Ci/mmole; New England Nuclear Biotechnology Systems, Wilmington, DE) at 48 h (mSC) or 72 h (hPBMC) and terminated 24 h later by automated harvesting. Incorporated radioactivity was determined in a liquid scintillation counter. All determinations were performed in triplicate and the results were expressed as mean counts per min (cpm) $\pm$ standard deviation.

RESULTS

The levels of IFN-τ activity in the supernatants of PHA-stimulated mouse spleen cells containing T. cruzi were found to be significantly lower than those in parasite-free cultures (Table 1). This reduction was demonstrable 48 h after the initiation of the cultures (decrease of 47%) but was more pronounced at 72 h (decrease of $\geq$59%). Similar results were found when 2 μg/ml of concanavalin A was used as the mitogen (data not shown). T. cruzi neither secreted an IFN-τ-like activity nor did it induce unstimulated mSC to do so (Table 1).

The noted decrease in the levels of IFN-τ in the culture supernatants might have resulted from a reduction in the production/ secretion of this lymphokine or from its removal by the parasite. To determine which of these possibilities explained our observations, solutions of recombinant murine IFN-τ were incubated in the presence or absence of T. cruzi for 48 h and the amount of residual antiviral activity was then determined. The amounts of IFN-τ remaining in the supernatants of cultures after the absorption with T. cruzi did not differ significantly from that in the mock-treated controls ($p \leq 0.1$). Thus, for example, in one of the experiments, the IFN-τ activities of the solutions after incubation with 5×10^6 or 1×10^7 trypomastigotes/ ml were 357 $\pm$ 140 and 303 $\pm$ 51 units /ml, respectively, whereas 284 $\pm$ 74 units/ml were detectable in control cultures to which parasites had not been added. It should be noted that the concentrations of parasites used for these absorptions represented two and four times, respectively, the level which was sufficient to reduce IFN-τ activity

TABLE 1. T. cruzi-induced Inhibition of IFN-γ Production by PHA-stimulated mSC[a]

Material tested	IFN-γ (units/ml)	
	48 h	72 h
mSC	≤30	≤30
T. cruzi	≤30	≤30
mSC + T.cruzi	≤30	≤30
T. cruzi + PHA	≤30	≤30
mSC + PHA	58	67
mSC + PHA + T. cruzi	31	≤30

[a] The tested materials consisted of the culture supernatants of mSC (2.5×10^6 cells/ml) and/or T. cruzi (2.5×10^6 organisms/ml) in the presence or absence of 5 μg/ml PHA. The supernatants were collected at the indicated times after initiation of the cultures. This set of results is typically representative of two separate repeat experiments.

in stimulated mSC cultures (see Table 1).

The addition of T. cruzi to cultures of stimulated mSC decreases lymphoproliferation (14). Because IFN-τ is able to modify the proliferation of T cells, either reducing or enhancing it depending on the dose and the time of administration (30), the possibility that the observed suppression in lymphocyte growth may have resulted from the inhibition of IFN-τ production by T. cruzi was explored. Varying amounts of exogenous recombinant murine IFN-τ were added to the cultures and their effects on ^{3}H-thymidine incorporation by T. cruzi-suppressed mSC were determined. As shown in Table 2, the addition of IFN-τ at concentrations ranging from 8 to 250 units/ml did not overcome the suppressive effect. Higher IFN-τ concentrations were not tested in these experiments because preliminary results (data not shown) had indicated that levels greater than 188 units/ml exert an inhibitory effect on lymphoproliferation. This can also be seen in Table 2 for the control result obtained with 250 units IFN-τ/ml.

Exogenous IL2 has been shown to restore the proliferative response of PHA-stimulated mSC suppressed in vitro by T. cruzi (L. A. Beltz, M. B. Sztein and F. Kierszenbaum, J. Immunol., in press). Since IFN-τ has been reported to affect the interaction of IL2 with lymphocytes by increasing the expression of IL2 receptors, we tested whether IFN-τ would act synergistically with IL2 and enhance the restorative effect of the latter lymphokine. The results indicated that treatment with 16 or 125 units/ml IFN-τ did not overcome T. cruzi-induced suppression when added together with suboptimal IL2 levels (50 units/ml) and did not improve mSC responsiveness when a restorative concentration of IL2

TABLE 2. Lack of Restoration by Exogenous IFN-τ of the Capacity of PHA-stimulated mSC to Proliferate after T. cruzi-induced Suppression[a]

IFN-τ (units/ml)	^{3}H-thymidine incorporation (cpm x 10^{-3}) by SC + PHA	SC + PHA + T. cruzi	% Decrease[b]
0	15.2 ± 1.0	0.8 ± 0.0[c]	95
8	14.6 ± 1.0	0.8 ± 0.2[c]	95
16	15.9 ± 0.8	0.7 ± 0.2[c]	95
32	14.6 ± 0.4	1.0 ± 0.4[c]	93
63	14.7 ± 1.7	0.9 ± 0.5[c]	94
125	13.9 ± 0.5	0.9 ± 0.1[c]	94
250	4.6 ± 0.7[c]	0.9 ± 0.0[c]	94

[a] Recombinant murine IFN-τ was added at the indicated concentrations to cultures of mSC (2.5 x 10^6 cells/ml) containing 5 μg PHA/ml in the presence or absence of 2.5 x 10^6 T. cruzi/ml. The cultures were incubated for 72 h and 1 μCi ^{3}H-thymidine was present during the last 24 h. This set of results is typically representative of three separate repeat experiments.

[b] Percent decrease with respect to the corresponding control (mSC + PHA, no IFN-τ).

[c] $p \leq 0.05$, for the reductions in cpm with respect to either control, i.e., mSC + PHA with or without IFN-τ, as calculated by Student's "t" test.

(100 units/ml) was used (data not shown).

We next examined whether T. cruzi would inhibit IFN-γ production or secretion by hPBMC. The presence of 5 x 10^6 parasites/ml in cultures of PHA-stimulated hPBMC did not lead to a significant reduction in the levels of IFN-γ in the supernatants (decrease of 5% at 72 h; Table 3). This parasite concentration was twice that found to consistently decrease murine IFN-γ production (Table 1) and suppress reproducibly mitogen-induced lymphoproliferation of hPBMC (1). The addition of exogenous human IFN-γ did not restore the suppressed proliferative response of hPBMC exposed to T. cruzi whether or not IL2 was present (data not shown).

Table 3. Lack of Effect of *T. cruzi* on IFN-γ Production by hPBMC

Material tested[a]	IFN-γ (units/ml)	
	48 h	72 h
hPBMC	≤5	≤5
T. cruzi	≤5	≤5
hPBMC + *T. cruzi*	≤5	≤5
T. cruzi + PHA	≤5	≤5
hPBMC + PHA	120	125
hPBMC + PHA + *T. cruzi*	96	119

[a] The tested materials consisted of the culture supernatants of hPBMC (1.25×10^6 cells/ml) and/or *T. cruzi* (5×10^6 organisms/ml) incubated in the presence or absence of 5 μg/ml PHA. The supernatants were collected at the indicated time of culture and IFN-γ activity was assayed by radioimmunoassay. This set of results is typically representative of two separate repeat experiments.

DISCUSSION

These results showed that the presence of T. cruzi in cultures of PHA-stimulated mouse spleen cells decreased the levels of IFN-τ activity in the supernatants (Table 1). This decrease was not due to absorption, consumption, or inactivation of the lymphokine by the parasite since incubation of recombinant IFN-τ with T. cruzi did not lead to a loss in antiviral activity even when incubated with four times as many parasites as were necessary to consistently suppress lymphoproliferation and reduce the levels of IFN-τ in our culture system. Therefore, the decrease in IFN-τ levels was due to reduced production or secretion of the lymphokine. We have previously reported that the incubation of PBMC with T. cruzi does not lead to losses in white cell numbers or viability and that the parasite does not remove significant amounts of nutrients or mitogen from the cultures (1).

Decreased proliferation by mSC from infected mice or by normal mSC incubated with T. cruzi in vitro is paralleled by decreases in IL2 (8,32; Beltz and Kierszenbaum, unpublished results) and IFN-τ production (Table 1). In contrast, T. cruzi is unable to decrease IL2 production by hPBMC under optimal culture conditions (L. A. Beltz, M. B. Sztein and F. Kierszenbaum, J. Immunol., in press) and, as reported herein, also has no significant effect on IFN-τ production by hPBMC (Table 3). Thus, there appear to exist notable differences in how the parasite affects mSC and hPBMC responses to PHA.

IFN-τ and IL2 are elements of a complex regulatory network and are able to affect each other's synthesis and utilization (5,11,12,24,27, 35), with IFN-τ production being upregulated by IL2 (5,24,35).

Accordingly, antibodies to the IL2 receptor and dexamethasone, a drug which blocks IL2 synthesis, decrease IFN-τ production by mitogen-stimulated hPBMC (24). Furthermore, the addition of exogenous IL2 to macrophage-depleted mixed lymphocyte cultures (5) and unstimulated hPBMC (35) induces IFN-τ synthesis. Since T. cruzi decreases the production of both IL2 and IFN-τ by mSC while having no effect on the production of either lymphokine by hPBMC, it is thus possible that the parasite's ability to inhibit synthesis of the former lymphokine is at least partially responsible for the decrease in the latter. It should be noted, however, that lymphocytes from mice infected with Trypanosoma brucei have an impairment in IL2 but not IFN-τ secretion (28), demonstrating that normal IL2 levels may not be an absolute requirement for optimal IFN-τ synthesis and opening the alternative possibility that T. cruzi may exert several independent suppressive effects on the T cells.

A decreased capacity to produce IFN-τ is characteristic of lymphocytes from patients with lepromatous, but not tuberculoid, leprosy (18). Since leprosy is a spectrum of disease states with the lepromatous and tuberculoid forms being the most and least pathogenic, respectively, increased pathology in this condition appears to correlate with a reduced capacity to produce IFN-τ. A similar defect is seen in susceptible, but not resistant, strains of mice infected with Leishmania donovani (15) or L. major (26). Thus, the ability of the host to produce IFN-τ may determine the subsequent severity of the disease.

In the case of T. cruzi, several in vitro and in vivo findings suggest a possible role of IFN-γ in host defense. Thus, the addition of IFN-γ to cultures of both murine fibroblasts and macrophages increases their resistance to in vitro infection by T. cruzi trypomastigotes (21,37). Furthermore, exogenous IFN-γ acts synergistically with anti-trypanosomal antibodies to decrease parasitemia and prolong survival of infected mice (20). The ability of T. cruzi to reduce IFN-γ production by mSC thus might decrease the host's capacity to eliminate the parasite.

T. cruzi has been reported to decrease mitogen-induced proliferation of lymphocytes from either infected mice (8-10,13) or humans (33). This defect is also observed when the parasite is co-cultured with mSC or hPBMC from uninfected donors (1,14). While IFN-γ has been found to amplify lymphocyte responses to mitogenic stimulation under certain circumstances (7,12,27,31), the data presented in Table 2 show that exogenous IFN-γ could not overcome the suppressive effect of T. cruzi. Therefore, it seems unlikely that reduced IFN-γ production lead to the T. cruzi-induced reduction in lymphoproliferation.

The capacity of mSC to produce IL2 is decreased following either in vivo or in vitro exposure to T. cruzi (8,32; L. Beltz and F. Kierszenbaum, unpublished results). The addition of IL2 to these suppressed cultures restores their ability to secrete immunoglobulin (22,23,32) and to proliferate in response to mitogen stimulation (L. A. Beltz, M. B. Sztein and F. Kierszenbaum, J. Immunol., in press). Because IFN-γ has been reported to increase the expression of IL2 receptors on both T cells (12,27) and monocytes (11) and higher levels

of the IL2 receptor allow cells to respond to lower concentrations of IL2 (4), we tested whether IFN-τ would enhance the restorative capacity of IL2. This, however, was not the case: IFN-τ did not act synergistically with IL2 or lower the concentration of IL2 required to achieve mSC recovery (data not shown).

In conclusion, we have demonstrated a deficient capacity of mSC to produce or secrete IFN-τ after exposure to T. cruzi. While this deficiency does not appear to be involved in the suppression of lymphocyte proliferation, it nevertheless may decrease the resistance of other host cells, such as macrophages, to parasite invasion and growth. Furthermore, these results demonstrate a salient difference in the suppressive activities of T. cruzi toward mSC and hPBMC. Whether this difference stems from the use of different populations of lymphocytes or from an actual difference in mouse and human lymphocyte responses to T. cruzi remains to be resolved.

ACKNOWLEDGEMENTS

This work was supported by NASA grant NAG 9-181 and a Biomedical Research Support Grant from the College of Osteopathic Medicine, Michigan State University.

REFERENCES

1. Beltz, L. A., and F. Kierszenbaum. 1987. Suppression of human lymphocyte responses by Trypanosoma cruzi. Immunology 60:309-315.

2. Boraschi, D., S. Censini, and A. Tagliabue. 1984. Interferon-τ reduces macrophage-suppressive activity by inhibiting prostaglandin E_2 release and inducing interleukin 1 production. J. Immunol. 133:764-768.

3. Budzko, D. B., and F. Kierszenbaum. 1974. Isolation of Trypanosoma cruzi from blood. J. Parasitol. 60:1037-1038.

4. Cantrell, D. A., and K. A. Smith. 1984. The interleukin-2 T-cell system: A new cell growth model. Science 224:1312-1316.

5. Farrar, W. L., H. M. Johnson, and J. J. Farrar. 1981. Regulation of the production of immune interferon and cytotoxic T lymphocytes by interleukin 2. J. Immunol. 126:1120-1125.

6. Frasca, D., L. Adorini, S. Landolfo, and G. Doria. 1985. Enhancing effect of IFN-τ on helper T cell activity and IL2 production. J. Immunol. 134:3907-3911.

7. Friedman, R. M., and S. N. Vogel. 1983. IFN's with special emphasis on the immune system. Adv.Immunol. 34:97-140.

8. Harel-Bellan, A., M. Joskowicz, D. Fradelizi, and H. Eisen. 1983. Modification of T-cell proliferation and interleukin 2 production in mice infected with Trypanosoma cruzi. Proc. Natl. Acad. Sci. USA 80:3466-3469.

9. Harel-Bellan, A., M. Joskowicz, D. Fradelizi, and H. Eisen. 1985. T lymphocyte function during experimental Chagas' disease: production of and response to interleukin 2. Eur. J. Immunol. 15:438-442.

10. Hayes, M. M., and F. Kierszenbaum. 1981. Experimental Chagas' disease: kinetics of lymphocyte responses and immunological control of the transition from acute to chronic Trypanosoma cruzi infection. Infect. Immun. 31:1117-1124.

11. Herrmann, F., S. A. Cannistra, H. Levine, and J. D. Griffin. 1985. Expression of interleukin 2 receptors and binding of interleukin 2 by gamma interferon-induced human leukemic and normal monocytic cells. J. Exp. Med. 162:1111-1116.

12. Johnson, H. M., and W. L. Farrar. 1983. The role of a gamma interferon-like lymphokine in the activation of T cells for expression of interleukin 2 receptors. Cell. Immunol. 75:154-159.

13. **Kierszenbaum, F.** 1981. On evasion of Trypanosoma cruzi from the host immune response. Lymphoproliferative responses to trypanosomal antigens during acute and chronic experimental Chagas' disease. Immunology. 44:641-648.

14. **Maleckar, J. R., and F. Kierszenbaum.** 1983. Inhibition of mitogen-induced proliferation of mouse T and B lymphocytes by bloodstream forms of Trypanosoma cruzi. J. Immunol. 130:908-911.

15. **Murray, H. W., H. Masur, and J. S. Keithly.** 1982. Cell-mediated immune response in experimental viseral leishmaniasis. 1. Correlation between resistance to Leishmania donovani and lymphokine-generating capacity. J. Immunol. 129:344-350.

16. **Murray, H. W., B. Y. Rubin, and C. D. Rothermel.** 1983. Killing of intracellular Leishmania donovani by lymphokine-stimulated human mononuclear phagocytes. Evidence that interferon-γ is the activating lymphokine. J. Clin. Invest. 72:1506-1510.

17. **Nathan, C. F., H. W. Murray, M. E. Wiebe, and B. Y. Rubin.** 1983. Identification of interferon-γ as the lymphokine that activates human macrophage oxidative metabolism and anti-microbial activity. J. Exp. Med. 158:670-689.

18. **Nogueira, N., G. Kaplan, E. Levy, E. N. Sarno, P. Kushner, A. Granelli-Piperno, L. Vieira, V. C. Gould, W. Levis, R. Steinman, Y. K. Yip, and Z. A. Cohn.** 1983. Defective γ-interferon production in leprosy. Reversal with antigen and interleukin 2. J. Exp. Med. 158:2165-2170.

19. **Pfefferkorn, E. R., and P. M. Guyre.** 1983. Recombinant human gamma interferon blocks the growth of Toxoplasma gondii in cultured human fibroblasts. Fed. Proc. 42:964-967.

20. **Plata, F., F. Garcia-Pons, and J. Wietzerbin.** 1987. Immune resistance to Trypanosoma cruzi: synergy of specific antibodies and recombinant interferon gamma in vivo. Ann. Inst. Pasteur/Immunol. 138:397-415.

21. **Plata, F., J. Wietzerbin, F. Garcia-Pons, E. Falcoff, and H. Eisen.** 1984. Synergistic protection by specific antibodies and interferon against infection by Trypanosoma cruzi in vitro. Eur. J. Immunol. 14:930-935.

22. **Reed, S. G., J. A. Inverso, and S. B. Roters.** 1984. Heterologous antibody responses in mice with chronic T. cruzi infection: depressed T helper function restored with supernatants containing interleukin 2. J. Immunol. 133:1558-1563.

23. **Reed, S. G., J. A. Inverso, and S. B. Roters.** 1984. Suppressed antibody responses to sheep erythrocytes in mice with chronic Trypanosoma cruzi infections are restored with interleukin 2. J. Immunol. 133:3333-3337.

24. **Reem, G. H., and N.-H. Yeh.** 1984. Interleukin 2 regulates expression of its receptor and synthesis of gamma interferon by human T lymphocytes. Science 225:429-430.

25. **Rosztoczy, I., O. Siroki, and I. Beladi.** 1986. Effects of interferons-α, -β, and -τ on human interleukin-2 production. J. Interferon Res. 6:581- 589.

26. **Sadrick, M. D., R. M. Locksley, C. Tubbs, and H. V. Raff.** 1986. Murine cutaneous leishmaniasis: resistance correlates with the capacity to generate interferon-τ in response to Leishmania antigens in vitro. J. Immunol. 136:655-661.

27. **Scheurich, P., U. Ucer, M. Killian, and K. Pfizenmaier.** 1985. Differential effects of gamma-interferon on human T cells during primary activation in vitro, p. 63-67. In C. Sorg, A. Schimpl, and M. Landy (eds.), Cellular and molecular biology of lymphokines. Proceedings of International Workshop in W. Germany, Academic Press, Orlando.

28. **Sileghem, M., R. Hamers, and P. De Baetselier.** 1987. Experimental Trypanosoma brucei infections selectively suppress interleukin 2 production and interleukin 2 receptor expression. Eur. J. Immunol. 17:1417-1421.

29. **Smith, K. A.** 1984. Interleukin 2. Ann. Rev. Immunol. 2:319-333.

30. **Sonnenfeld, G., A. D. Mandel, and T. C. Merigan.** 1977. The immunosuppressive effect of type II mouse interferon preparations on antibody production. Cell. Immunol. 34:193-206.

31. **Sonnenfeld, G., A. D. Mandel, and T. C. Merigan.** 1978. Time and dosage dependence of immunoenhancement by murine type II interferon preparations. Cell. Immunol. 40:285-293.

32. **Tarleton , R. L., and R. E. Kuhn.** 1984. Restoration of in vitro immune responses of spleen cells from mice infected with Trypanosoma cruzi by supernatants containing interleukin 2. J. Immunol. 133:1570-1575.

33. **Teixeira, A. R. L., G. Teixeira, V. Macedo, and A. Prata.** 1978. Acquired cell-mediated immunodepression in acute Chagas' disease. J. Clin. Invest. 62:1132-1141.

34. **Trinchieri, G., and B. Perussia.** 1985. Immune interferon: a pleiotropic lymphokine with multiple effects. Immunol. Today. 6:131-136.

35. **Vilcek, J., D. Henriksen-Destefano, D. Siegel, A. Klion, R. J. Robb, and J. Le.** 1985. Regulation of IFN-τ induction in human peripheral blood cells by exogenous and endogenously produced interleukin 2. J. Immunol. 135:1851-1856.

36. **Villalta, F., and W. Leon.** 1979. Effect of purification by DEAE-cellulose column on infectivity of Trypanosoma cruzi blood forms. J. Parasitol. 65:188-189.

37. **Wirth, J. J., F. Kierszenbaum, G. Sonnenfeld, and A. Zlotnik.** 1985. Enhancing effects of gamma interferon on phagocytic cell association with and killing of Trypanosoma cruzi. Infect. Immun. 49:61-66.

CHAPTER 3

NOVEL MECHANISM FOR *Trypanosoma cruzi*-INDUCED SUPPRESSION OF HUMAN LYMPHOCYTES: INHIBITION OF INTERLEUKIN 2 RECEPTOR EXPRESSION



ABSTRACT

Co-culture of blood forms of Trypanosoma cruzi - the causative agent of Chagas' disease - with human peripheral blood mononuclear cells impaired the capacity of T lymphocytes to express surface receptors for interleukin 2 (IL2R). This effect was evidenced by marked reductions in both the proportion of Tac^+ cells and the density of Tac antigen on the surface of the positive cells, determined by flow cytometry. The extent of the inhibition increased with increasing parasite concentrations. Under optimal or suboptimal conditions of stimulation with either phytohemagglutinin or monoclonal anti-CD3 - specific for an epitope of the CD3-Ti human T cell antigen receptor complex- the presence of T. cruzi curtailed the capacity of T lymphocytes to proliferate and express IL2R but did not affect IL2 production. Furthermore, the addition of exogenous IL2 did not restore the responsiveness of suppressed human lymphocytes but did when mouse lymphocytes were used instead. Therefore, unlike mouse lymphocytes, human lymphocyte suppression by T. cruzi did not involve deficient IL2 production and was accompanied by impaired IL2 utilization. Co-culture of human monocytes/macrophages with suppressive concentrations of T. cruzi increased interleukin 1 (IL1) production and the parasite did not decrease IL1 secereton stimulated by a bacterial lipopolysaccharide. Therefore, the suppression of IL2R expression and lymphoproliferation is not likely to have been an indirect consequence of insufficient IL1 production due to infection of monocytes or macrophages. We have previously shown that suppression of human lymphocyte proliferation by

T. cruzi is not caused by nutrient consumption, absorption of IL2, lymphocyte killing or mitogen removal by the parasite. Therefore, these results uncover a novel suppressive mechanism induced by T. cruzi, involving inhibited expression of IL2R following lymphocyte activation and rendering T cells unable to receive the IL2 signal required for continuation of their cell cycle and mounting effective immune responses.

INTRODUCTION

Chagas' disease - caused by the protozoan Trypanosoma cruzi-is a major health problem in South and Central America. Its acute phase, both in laboratory animals and in humans, is accompanied by a state of suppressed immunity believed to facilitate the establishment and dissemination of the etiologic agent in the host (1-15). Several immunological abnormalities have been identified in mice infected with T. cruzi, including increased levels of suppressor lymphocytes and macrophages (1-4) and diminished levels of T cells (5) in the spleen, impaired lymphocyte proliferation in response to mitogens (2,4-9) or parasite antigens (10), suppressed antibody-forming capacity (11) and impaired IL2 production (4,7,12). How these abnormalities are induced is not known and, unfortunately, differences in how mouse and human lymphocytes are affected by T. cruzi make it difficult to extrapolate these findings to human infection. Thus, murine splenic lymphocytes - whether from infected animals (12, 16, 17) or co-cultured with the parasite in vitro (Beltz and Kierszenbaum, unpublished results)- display reduced interleukin 2 (IL2)-producing capacity, the consequences of which are overcome by the addition of exogenous IL2 (12, 16, 17); this is not the case for human lymphocytes suppressed by the parasite (15). To study the early alterations that T. cruzi induces in human lymphocytes and to explore the mechanism(s) involved, we used an in vitro system in which lymphocytes and monocytes/macrophages were incubated with the parasite in the presence of lymphocyte-activating stimuli. We report that T. cruzi inhibits the

capacity of human T lymphocytes to express surface interleukin 2 receptors (IL2R) upon activation. This effect may render T lymphocytes unable to receive the IL2 signal required to proceed with their cell division cycle and mount significant levels of immunity.

MATERIALS AND METHODS

Parasites. Blood (trypomastigote) forms of Tulahuen strain T. cruzi were isolated from the blood of Crl-CD-1(ICR) Swiss mice (Charles River Breeding Laboratories) infected 2 weeks previously with 2 X 10^5 parasites intraperitoneally. The parasites were purified by centrifugation over a mixture of Ficoll-Hypaque of density 1.077 (18), followed by chromatography through DEAE-cellulose (19). The eluted organisms (100% trypomastigotes) were concentrated by centrifugation (800 X g, 20 min, 4°C) and resuspended at the desired concentration in RPMI 1640 medium supplemented with 5% (vol/vol) heat-inactivated fetal bovine serum and containing streptomycin at 100 μg/ml and penicillin at 100 units/ml (henceforth referred to as RPMI+S).

Peripheral blood mononuclear cells (PBMC). Normal PBMC from healthy volunteers were purified by density gradient centrifugation through a mixture of Ficoll-Hypaque of density 1.077 (350 X g, 20°C, 45 min). After three washings with serum-free RPMI 1640 medium, the cells were resuspended at the desired concentration in RPMI+S. Cell viability, determined by trypan-blue-dye exclusion, was >99%.

Mouse spleen cells. Single cell suspensions of inbred CBA/J mouse (Jackson Laboratory) spleen cells were prepared in RPMI+S as described (13).

Recombinant IL2. Recombinant, glycosylated human IL2 was purchased from Genzyme (Boston, MA).

Lymphocyte proliferation assay. PBMC were incubated in RPMI+S (5% CO_2; 96-well plates) at 37°C for 96 hours with or without 0.6 or 5

μg/ml PHA (Sigma Chemical Co.) or 6 or 25 ng/ml anti-CD3 (Ortho Diagnostics) [a monoclonal antibody specific for an epitope of the T cell antigen receptor complex CD3-Ti (20)] in the presence or absence of T. cruzi. The culture volume was 0.1 ml. All conditions were tested in triplicate. Each culture received 1 μCi ^{3}H-thymidine 24 hours before termination by automated harvesting. Radioactivity was determined in a liquid scintillation counter; the results were expressed as mean counts per minute (cpm) ± 1 standard deviation. The concentrations of PBMC and parasites at zero time, and after 48 and 96 hr of culture are given under Results. Viability was established by trypan blue exclusion.

Measurement of IL2 activity. IL2 activity was determined in the supernatants of 48-hour PBMC cultures set up as described above except that the final volume was 1.5 ml and 24-well plates were used. The supernatants were passed through a 0.22-μm-pore-size filter to remove parasites if present and stored at -20°C until tested. The IL2-dependent HT-2 cell line was used to determine IL2 activity (15) and the results were expressed as units/ml in reference to a standard IL2 preparation (concanavalin A-stimulated rat spleen cell culture supernatants) which was arbitarily assigned a value of 100 units/ml (21).

Flow cytometric determinations. PBMC (1.25 X 10^6 cells/ml) were incubated in RPMI+S (5% CO_2; 24-well plates) at 37°C for 48 hours with PHA or anti-CD3 monoclonal antibody in the presence or absence of T. cruzi. After 48 hours, the cells were washed three times with phosphate-buffered saline pH 7.2 containing 1% bovine serum albumin (Sigma) and were stained by treatment with anti-Tac monoclonal antibody

[which recognizes an epitope of the human IL2R (22) and was kindly provided by Dr. T. A. Waldmann, National Institutes of Health] followed, after washing, by flourescein-conjugated $F(ab')_2$ derived from goat anti-mouse IgG antibody (Tago Immunodiagnostics). The cells were fixed in 1% formaldehyde and were analyzed in a FACS IV flow cytometer. Ten thousand PBMC, gated to exclude T. cruzi and cell debris, were accumulated for each histogram. The percentage of $IL2R^+$ cells [i.e., $\%Tac^+$ cells (22)] in each preparation was calculated after subtracting the background of nonspecific labeling with MOPC-21 (a nonspecific IgG derived from a mouse myeloma cell culture) and fluorescein-conjugated $F(ab')_2$ anti-mouse IgG. The mean channel number of the logarithm of the fluorescence intensities (MFCh) was the parameter used to compare the relative density of Tac antigen on the different Tac^+ cell populations. The logarithm of fluorescence intensities was distributed over 256 channels.

Production and bioassay for interleukin 1 (IL1). One ml of PBMC suspension at 2.5×10^6 PBMC/ml was incubated at 37°C for 2 hours in 24-well plates; the adherent cells (>98% monocytes/macrophages by both morphological criteria and positive staining for non-specific esterase) were incubated with medium alone or containing 5×10^6 or 1×10^7 trypomastigotes/ml in the presence or absence of 20 μg/ml bacterial lipopolysaccharide (LPS, Difco) at 37°C for 24 hours (5% CO_2). Culture supernatant dilutions were added to mouse thymocyte cultures stimulated with a suboptimal PHA concentration (1 μg/ml) as described in detail by Meltzer and Oppenheim (23). The results were expressed as cpm representing ^3H-thymidine incorporation by proliferating thymocytes.

RESULTS

T. cruzi inhibits IL2R expression by human lymphocytes. In the presence of bloodstream forms of T. cruzi, PBMC stimulated with PHA showed a markedly decreased capacity to express surface IL2R. This effect was parasite concentration dependent (Table 1) and was evidenced by a decrease in the proportion of $IL2R^+$ cells as well as in the density of Tac antigen on the surface of the positive lymphocytes whether optimal or suboptimal PHA concentrations were used (Fig. 1).

To establish whether this effect was also produced under conditions known to mimick antigen-induced lymphocyte activation (23), we carried out similar experiments using anti-CD3 as the stimulant. The results demonstrated that T. cruzi also impaired IL2R expression in this case whether the lymphocytes were stimulated with optimal or suboptimal amounts of anti-CD3 (Fig. 1). T. cruzi did not stain positively for Tac antigen [i.e., did not bind anti-Tac or the fluorescein-labeled $F(ab')_2$ anti-mouse IgG] whether or not co-cultured with PBMC in the presence or absence of PHA or anti-CD3, and did not respond to recombinant IL2 (20 to 250 units/ml) with altered levels of ^3H-thymidine incorporation (data not shown).

T. cruzi has been shown to suppress ^3H-thymidine incorporation by PBMC stimulated with suboptimal or optimal PHA concentrations (15). The results presented in Table 2 indicated that this was also the case when the lymphocytes were triggered with suboptimal or optimal concentrations of anti-CD3. Under the suboptimal or optimal stimulatory conditions used in the experiments described above (0.6 and

TABLE 1

T. cruzi-induced suppression of IL2R expression by human lymphocytes[a]

T. cruzi/ml	PHA	% Tac+ cells (%V)	MFCh
0	Absent	<2	
0	Present	46.3	114
1×10^6	Present	34.9 (-25)	112
5×10^6	Present	26.5 (-43)	67
10×10^6	Present	4.2 (-91)	86

[a] Cultures of PBMC (1.25×10^6 cells/ml) with or without T. cruzi were incubated with or without 5 μg/ml PHA for 48 hr. The cells were stained with anti-Tac and fluorescein-labeled goat $F(ab')_2$ anti-mouse IgG. The percentage of Tac^+ cells was calculated after subtracting the background of nonspecific labeling (see Materials and Methods). Percent variation (%V) with respect to the value obtained with PHA alone = [(value with parasites - value without parasites) / value without parasites X 100]. This set of results is typically representative of two separate repeat experiments.

Figure 1. Effects of T. cruzi on IL2R expression by human lymphocytes. PBMC were incubated at 37°C for 48 hours with PHA or anti-CD3 monoclonal antibody in the presence or absence of 5 X 10^6 T. cruzi/ml. The cells were processed for flow cytometric analysis as described under Table 1. (A) Responses to an optimal PHA concentration (5 μg/ml): PHA, 55.0% Tac^+ cells, MFCh 120; PHA+T. cruzi, 40.3% Tac^+ cells, MFCh 103. (B) Responses to a suboptimal PHA concentration (0.6 cells μg/ml): PHA, 28.6% Tac^+ cells, MFCh 126; PHA+T. cruzi, 19.6% Tac^+, MFCh 109. (C) Responses to an optimal anti-CD3 concentration (25 ng/ml): anti-CD3, 41.5% Tac^+ cells, MFCh 137; anti-CD3+T. cruzi, 27.0% Tac^+ cells, MFCh 121. (D) Responses to a suboptimal anti-CD3 concentration (6 ng/ml): anti-CD3, 20.5% Tac^+ cells, MFCh 133; anti-CD3+T. cruzi, 16.0% Tac^+ cells, MFCh 117. In control PBMC cultures (no PHA or anti-CD3), the proportion of Tac^+ cells never exceeded 4%. The sets of data for PHA- and anti-CD3-induced responses are representative of five and three separate repeat experiments, respectively. MFCh is the mean channel number of the logarithm of the fluorescence intensity.

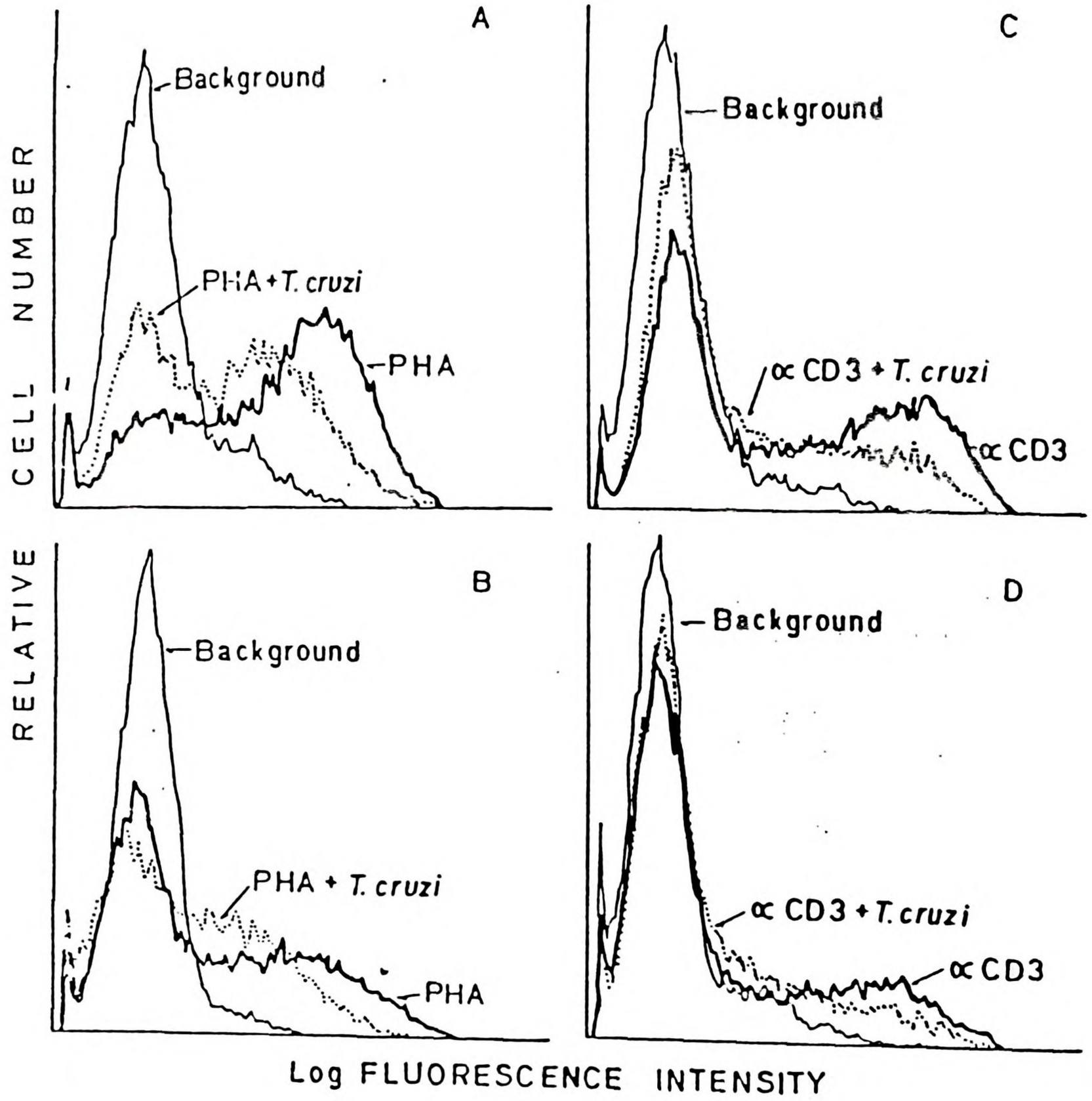
A
Background
PHA + T. cruzi
PHA
CELL NUMBER
C
Background
∝ CD3 + T. cruzi
∝ CD3
B
Background
PHA + T. cruzi
PHA
RELATIVE
D
Background
∝ CD3 + T. cruzi
∝ CD3
Log FLUORESCENCE INTENSITY

TABLE 2

Effects of T. cruzi on the capacity of human lymphocytes to proliferate and secrete IL2 in response to PHA or anti-CD3[a]

Mitogen	^{3}H-thymidine incorporation			IL2 (units/ml)	
	PBMC	PBMC+*T. cruzi*	(%V)	PBMC	PBMC+*T. cruzi*
PHA, 5 μg/ml	88.5±6.0	31.8±2.5	(-64)	353	435
PHA, 0.6 μg/ml	54.5±1.1	23.5±0.6	(-57)	4	25
Anti-CD3, 25 ng/ml	36.7±0.8	16.2±1.2	(-56)	31	18
Anti-CD3, 6 ng/ml	6.2±2.4	3.4±0.6	(-45)	1	7

[a] PBMC (1.25×10^6 cells/ml) were incubated at 37°C for 96 hours with PHA or anti-CD3 monoclonal antibody in the presence or absence of 5×10^6 parasites/ml. Each culture received 1 μCi ^{3}H-thymidine 24 hours before termination. All values of ^{3}H-thymidine incorporation are expressed as thousand cpm. The background values obtained without mitogen (0.2 and 7.0 for PBMC cultures without and with parasites, respectively) were subtracted from those obtained in the presence of mitogen. All differences between values obtained with and without parasites were statistically significant ($P \leq 0.02$, Student's "t" test). IL2 activity was concurrently determined in the supernatants of 48-hour PBMC cultures set up as described above. The differences between IL2 levels in the absence and presence of *T. cruzi* were not significant. %V, see legend to Table 1. This set of data is typically representative of three repeat experiments.

5 μg/ml PHA, respectively, and 6 and 25 ng/ml anti-CD3, respectively, with 1.25 X 10^6 PBMC/ml), the levels of IL2 activity found in the supernatants were not decreased by the trypanosomes and in occasional instances IL2 levels were, in fact, greater in the presence of the parasite than in its absence. We previously reported that supraoptimal culture conditions [i.e., higher mitogen (25 or 50 μg/ml PHA) and PBMC (5 X 10^6 cells/ml) concentrations] result in reduced IL2 production in the presence of T. cruzi (15). When we tested the IL2R-expressing capacity of human lymphocytes under these supraoptimal conditions in the presence of the parasite, the proportions of Tac^+ cells in cultures stimulated with 25 and 50 μg/ml PHA were 22 and 45% lower, respectively, than those found in parasite-free cultures; IL2 activity was reduced by 24 and 32%, respectively (data not shown).

A comparison of the concentrations and viability of the PBMC revealed that the presence of the parasite caused no significant difference in these parameters 48 hr after culture initiation. Thus, for example, in a representative experiment, the PBMC concentrations measured at 48 hr in the absence and presence of T. cruzi were 1 X 10^6 (99% viable) and 0.9 X 10^6 (99% viable) PBMC/ml, respectively, when no mitogen was present. The corresponding values in the presence of 5 μg/ml PHA were 0.9 X 10^6 (99% viable) and 1 X 10^6 (99% viable) PBMC/ml. The values obtained after 96 hr, in the absence of mitogen, were 6.5 X 10^5 (99% viable) and 7.8 X 10^5 (92% viable) PBMC/ml, in the absence and presence of parasites, respectively. PHA-induced lymphoproliferation and the suppressive effect of the parasite were evident after 96 hr; 1.5 X 10^6 (96% viable) and 7.8 X 10^5 (90% viable) PBMC/ml were present

in cultures lacking and containing the organisms, respectively. Although there were some fluctuations in the 48- and 96-hr PBMC concentrations from experiment to experiment, the differences or lack of difference summarized in the preceding sentences were consistently observed. During the 96-hr culture there were minimal variations in total parasite concentration. However, the proportion of trypomastigotes (100% at the initiation of the cultures) was reduced to approximately 50% and 40% after 48 and 96 hr, respectively, whether mitogen was present or not, the rest being amastigote-like organisms. Epimastigote forms were not detectable. In the various experiments, ^{3}H-thymidine incorporation by the parasites alone represented 5 to 15% of the cpm obtained with parasites plus PBMC stimulated with PHA or anti-CD3. This contribution, part of the background, was subtracted from the experimental values presented in Tables 2 and 3.

We have previously shown that T. cruzi does not absorb, consume or inactivate IL2 (15), ruling out removal of this lymphokine by the parasite as the suppressive mechanism. However, because lymphocytes from infected mice recover their responsiveness to mitogens or antigens after addition of exogenous IL2 (12, 16, 17), and IL2 up-regulates the expression of its own receptor (24), we tested the possibility that the lymphocytes affected by the parasite might have required more IL2 than was produced by mitogen-stimulated PBMC to normally express IL2R and proliferate. As shown in Table 3, neither IL2R expression nor the level of ^{3}H-thymidine uptake returned to normality after addition of 250 units/ml IL2. Similar results were obtained in experiments in which doses of IL2 up to 600 units/ml were used and ^{3}H-thymidine

TABLE III

Effects of T. cruzi on ^{3}H-thymidine incorporation and IL2R expression by human lymphocytes stimulated with PHA or anti-CD3 in the presence or absence of exogenous IL2[a]

Mitogen	Addition of exogenous IL2	^{3}H-thymidine incorporation		IL2R expression		%V for Tac^{+} cells
		PBMC alone	PBMC+T. cruzi (%V)	PBMC alone %Tac^{+}/MFCh	PBMC+T. cruzi %Tac^{+}/MFCh	
PHA, 5 µg/ml	-	61.0 ± 8.2	9.4 ± 0.7 (-85)	59.6/129	39.5/109	-34
PHA, 5 µg/ml	+	59.4 ± 0.8	15.8 ± 0.9 (-73)	63.8/135	43.9/117	-31
Anti-CD3, 25 ng/ml	-	37.4 ± 1.4	5.3 ± 2.6 (-86)	30.3/122	19.1/110	-37
Anti-CD3, 25 ng/ml	+	28.7 ± 3.5	4.7 ± 0.3 (-74)	38.0/136	21.5/111	-43

[a] The PBMC cultures were performed as described in the legend to Table II. Recombinant, glycosylated human IL2 was added to the appropriate cultures (at 250 units/ml) immediately after the mitogen; control cultures received an equivalent amount of medium instead. All values of ^{3}H-thymidine incorporation are expressed as thousand cpm. The values obtained without mitogen were subtracted from those obtained in the presence of mitogen: 0.3 and 1.0 for cultures without and with IL2, respectively, for the experiment with PHA without parasites; and 9.4 and 9.4 for cultures containing T. cruzi without and with IL2, respectively. For the experiment with anti-CD3 in the absence of parasites the values were: 0.2 and 2.5 for cultures without and with IL2, respectively, and 7.0 and 6.7 for cultures containing T. cruzi without and with IL2, respectively. All differences between values obtained with and without parasites were statistically significant ($P \leq 0.02$, Student's "t" test). The sets of data for PHA and anti-CD3 are typically representative of two repeats. %V, see legend Table I.

incorporation was determined (Table 4). In contrast, substantial and total recovery of T. cruzi-suppressed mouse lymphocyte responses was obtained with 100 and 250 units/ml IL2, respectively.

We tested the possibility that T. cruzi may have inhibited IL1 production by human macrophoges/monocytes, thus indirectly affecting lymphocyte function. Macrophages/monocytes incubated with suppressive concentrations of T. cruzi secreted greater amounts of IL1 than replicate cultures incubated without the parasites (Table 5). Furthermore, the parasite did not decrease IL1 production stimulated by another inducer, LPS.

TABLE 4

Restoration by exogenous IL2 of mouse but not human proliferative responses suppressed by T. cruzi[a]

Cells from	IL2 (U/ml)	Cells alone	Cells+ T. cruzi	Cells+ PHA	Cells+ PHA+T. cruzi	%S
Mouse spleen	0	1.6±0.6	6.9±0.1	30.0±0.8	5.0±0.2	83
	100	4.1±0.5	18.1±0.4	46.6±2.2	24.8±0.6	17
	250	7.3±0.5	14.7±0.2	51.7±2.3	35.2±1.5	-17
Human blood	0	0.7±0.2	2.2±0.3	81.0±2.0	36.1±0.6	55
	100	1.3±0.1	2.3±0.4	78.3±2.9	36.5±0.4	55
	250	2.0±0.5	2.9±0.9	85.4±1.0	36.2±1.5	55
	600	3.0±0.1	2.5±0.2	70.7±1.2	34.9±0.3	57

[a] Mouse spleen cells (2.5×10^6 cells/ml) were co-cultured with 2.5×10^6 T. cruzi/ml for 72 hours (13). Human PBMC (1.25×10^6 cells/ml) were co-cultured with 5×10^6 T. cruzi/ml for 96 hours. PHA was used at 5 μg/ml. All values of ^{3}H-thymidine incorporation are expressed as thousand cpm. %S, percent suppression with respect to cells+PHA in the absence of exogenous IL2. This set of data is typically representative of two repeat experiments.

TABLE 5

IL1 production by human monocytes/macrophages in the presence or absence of T. cruzi[a]

Supernatant of monocytes/macrophages plus	Supernatant dilution 1:6	1:18	1:54
No parasites	0.3 ± 0.0	0.6 ± 0.1	0.6 ± 0.2
5×10^6 T. cruzi/ml	6.7 ± 1.8	3.3 ± 0.8	3.2 ± 0.6
1×10^7 T. cruzi/ml	5.7 ± 1.7	3.2 ± 0.6	2.3 ± 0.4
LPS, 20 μg/ml	9.4 ± 2.1	5.2 ± 0.8	1.2 ± 0.3
LPS + 5×10^6 T. cruzi/ml	10.1 ± 0.4	8.5 ± 1.8	4.3 ± 0.8
LPS + 1×10^7 T. cruzi/ml	8.8 ± 1.8	7.1 ± 2.1	3.0 ± 0.5

[a] Monocytes/macrophages were cultured at 37°C in medium alone or containing LPS in the presence or absence of T. cruzi for 24 hours. Dilutions of the supernatants were tested for potentiation of mouse thymocyte proliferation (^{3}H-thymidine uptake) induced with a suboptimal dose of PHA (23). The supernatant dilutions represent final dilutions in the culture medium. Control values: Thymocytes in medium alone = 0.4 ± 0.1; thymocytes + LPS = 0.4 ± 0.0. All values are expressed in thousand cpm.

DISCUSSION

These results reveal the ability of T. cruzi to inhibit IL2R expression by human T lymphocytes activated either by a mitogenic lectin or by engagement of their antigen receptor conplex with a specific monoclonal antibody. As far as we know, this is the first time that any parasite has been demonstrated to directly affect IL2R expression, an early event in lymphocyte activation which plays a crucial role in the ability of T cells to proliferate and mount immune responses.

The reduction in the percentage of cells expressing IL2R indicated that the suppressive effect of T. cruzi was so pronounced as to virtually abrogate this ability in a significant proportion of lymphocytes. The impressive reductions in MFCh (a logarithm-based parameter representing in our studies the surface density of Tac antigen) indicated that even on those lymphocytes on which IL2R protein was still expressed, the extent had been considerably diminished. If these consequences of lymphocyte exposure to T. cruzi occurred also in vivo, they would be expected to impair the host's immunocompetence by reducing lymphoproliferation induced by IL2 and inhibiting the proliferation of important effector cells. This would in turn facilitate the dissemination of T. cruzi during the acute phase of the infection, i.e., when the parasite is present in tissues and/or body fluids in larger numbers. In the latter context, it is noteworthy that the parasite concentrations found in this work to suppress IL2R expression are in line with those found in the blood of acutely

infected mammalian hosts. Furthermore, immunosuppression most likely develops at the lymphoid tissue level where parasite concentrations may reach even higher levels, at least focally. Therefore, conditions similar to those used in our studies are likely to occur in acute chagasic patients, in whom immunosuppression has been documented (14).

We previously demonstrated that human lymphocyte suppression resulting from co-culture with T. cruzi is not due to nutrient consumption since culture medium "spent" by the parasite was as effective in supporting mitogen-stimulated PBMC proliferation as mock-treated medium (15). In that study we also showed that T. cruzi does not absorb or consume IL2, and that immunosuppression is not due to increased PBMC killing by the parasite. The latter observation was confirmed in the present work. In addition, the parasite did not bind anti-Tac or the fluorescein-labeled $F(ab')_2$ anti-mouse IgG used as "second antibody" and, therefore, could not have reduced the concentrations of these reagents in our flow cytometric studies. We show now that T. cruzi increases, rather than decreases, IL1 production by human monocytes/macrophages and does not decrease IL1 secretion stimulated by another inducer. These results argue strongly against the notion that the suppressive effects of T. cruzi, including inhibited IL2R expression, could be a consequence of impaired IL1 production or secretion. Suppressed IL2R expression without concomitant reduction of either IL2 production by lymphocytes or IL1 secretion by macrophages/monocytes appears to point to IL2R expression as selectively affected by the parasite to inhibit lymphocyte competence. Since IL2R protein expression starts around 12 hr after

mitogenic stimulation, peaking at 48 to 72 hr (25-27), the biochemical event(s) targetted by T. cruzi is traced by our results to the very early stages of lymphocyte activation.

Although IL1 secretion was not inhibited by T. cruzi and the parasite has been shown to suppress mitogen-stimulated proliferation by human lymphocytes even after monocyte/macrophage depletion (15), the present results do not rule out the possibility that T. cruzi may suppress human lymphocyte function at least in part by altering other monocyte/macrophage accessory cell function(s). This possibility deserves attention but, whatever the result turns out to be, the fact will remain that IL2R expression was markedly inhibited by the parasite.

T. cruzi-induced suppression appears to be achieved by different pathways in mouse and human lymphocytes. Thus, mouse but not human lymphocyte suppression can be corrected by exogenous IL2. Several groups of investigators, using different experimental systems, have shown the recovery of immune responsiveness by lymphocytes from infected mice (12, 16, 17) upon addition of exogenous IL2 and we report here similar results for normal mouse lymphocytes suppressed in vitro by T. cruzi. These observations suggest that IL2R are normally expressed on the surface of the mouse lymphocytes since they would not, otherwise, be able to transduce the lymphokine signal and recover. In contrast, normal production of IL2 by human lymphocytes was readily demonstrable in our studies and these cells were incapable of utilizing either the endogenously produced or exogenously added IL2.

Under optimal stimulatory conditions T. cruzi inhibited IL2R expression without affecting IL2 production. However, the parasite can, under supraoptimal conditions, suppress both IL2R and IL2 production (15; this paper). These results infer that, regardless of functional lymphocyte performance dictated by environmental conditions, the parasite invariably inhibits IL2R expression. Thus, availability of IL2 would not appear to be an important issue in the case of human lymphocyte suppression by T. cruzi, probably explaining why the increases in IL2 levels occassionally brought about by the parasite were nevertheless accompanied by impaired responsiveness. These sporadic increases might have reflected decreased IL2 utilization due to reduced IL2R expression or actually enhanced IL2 production. However, the precise explanation for this phenomenon would not detract from the fact that the suppressed expression of IL2R or lymphoproliferation was independent of the presence of ample amounts of IL2 in the culture medium.

It is noteworthy that, occasionally, we observed that, whether PHA or anti-CD3 was used, the typical decrease in surface density of Tac antigen and suppressed lymphocyte proliferation were accompanied by only a modest reduction in the percentage of Tac^+ cells (<15%). High Tac antigen density correlates with the presence of higher numbers of high-affinity IL2R (F. Ruscetti, personal communication) which internalize IL2 leading to lymphoproliferation (28-30). In this light, suppressed proliferation and decreased Tac antigen density without a concomitant significant reduction in the percentage of Tac^+ cells could result from altered expression of high-affinity IL2R. Since high-

affinity IL2R consist of an alpha chain (which contains the Tac epitope) and a beta chain (31), these results indicate that T. cruzi might alter the expression of the beta chain as well as that of the alpha chain. Much remains to be done before the mechanism of suppressed IL2R expression reported herein is well understood. The defect may exist at the level of transcription or translation of the IL2R gene or in its transport to the cell membrane. Equally interesting to know is whether other lymphocyte activation markers are also affected and the means and mediators, if any, by which T. cruzi inhibits IL2R expression.

In closing, we would like to point out the possible usefulness of the in vitro system used in this work to study the mechanism of T. cruzi suppression in the exploration of early regulatory events in human lymphocyte activation.

REFERENCES

1. Ramos, C., I. Schadtler-Siwon, and L. Ortiz-Ortiz. 1979. Suppressor cells present in the spleens of Trypanosoma cruzi-infected mice. J. Immunol. 122:1243.

2. Cunningham, D. S., and R. E. Kuhn. 1980. Lymphoblast transformation as a measure of immune conpetence during experimental Chagas' disease. J. Parasitol. 66:390.

3. Kierszenbaum, F. 1982. Immunologic deficiency during experimental Chagas' disease (Trypanosoma cruzi infection): role of adherent, nonspecific esterase-positive splenic cells. J. Immunol. 129:2202.

4. Harel-Bellan, A., M. Joskowicz, D. Fradelizi, and H. Eisen. 1985. T lymphocyte function during Chagas' disease: production of and response to interleukin 2. Eur. J. Immunol.15:438.

5. Hayes, M. M., and F. Kierszenbaum. 1981. Experimental Chagas' disease: kinetics of lymphocyte responses and immunological control of the transition from acute to chronic Trypanosoma cruzi infection. Infect. Immun. 31:1117.

6. O'Daly, J. A., S. Simonis, N. de Rolo, and H. Caballero. 1984. Suppression of humoral immunity and lymphocyte responsiveness during experimental Trypanosoma cruzi infections. Rev. Inst. Med. Trop. Sao Paulo 26:67.

7. Harel-Bellan, A., M. Joskowicz, D. Fradelizi, and H. Eisen. 1983. Modification of T-cell proliferation and interleukin 2 production in mice infected with Trypanosoma cruzi. Proc. Natl. Acad. Sci. USA 80:3466.

8. Rowland, E. C., and R. E. Kuhn. 1978. Suppression of cellular responses in mice during Trypanosoma cruzi infection. Infect. Immun. 20:393.

9. Kierszenbaum, F., and D. B. Budzko. 1982. Trypanosoma cruzi: deficient lymphocyte reactivity during experimental acute Chagas' disease in the absence of suppressor T cells. Parasite Immunol. 4:441.

10. Kierszenbaum, F. 1981. On evasion of Trypanosoma cruzi from the host immune response. Lymphoproliferative responses to trypanosomal antigens during acute and chronic experimental Chagas' disease. Immunology 44:641.

11. Clinton, B. A., L. Ortiz-Ortiz, W. Garcia , T. Martinez, and R. Capin. 1975. Trypanosoma cruzi: early immune responses in infected mice. Exp. Parasitol. 37:417.

12. Tarleton, R. L., and R. E. Kuhn. 1984. Restoration of *in vitro* immune responses of spleen cells from mice infected with *Trypanosoma cruzi* by supernatants containing interleukin 2. J. Immunol. 133:1570.

13. Maleckar, J. R., and F. Kierszenbaum. 1983. Inhibition of mitogen-induced proliferation of mouse T and B lymphocytes by bloodstream forms of *Trypanosoma cruzi*. J. Immunol. 130:908.

14. Teixeira, A. R. L., G. Teixeira, V. O. Macedo, and A. Prata. 1978. Acquired cell-mediated immunodepression in acute Chagas' disease. J. Clin. Invest. 62:1132.

15. Beltz, L. A., and F. Kierszenbaum. 1987. Suppression of human lymphocyte responses by *Trypanosoma cruzi*. Immunology 69:309.

16. Reed, S. G., J. A. Inverso, and S. P. Roters. 1984. Heterologous antibody responses in mice with chronic *T. cruzi* infection: depressed T helper function restored with supernatants containing interleukin 2. J. Immunol. 133:1558.

17. Reed, S. G., J. A. Inverso, and S. P. Roters. 1984. Suppressed antibody responses to sheep erythrocytes in mice with chronic *Trypanosoma cruzi* infections are restored with interleukin 2. J. Immunol. 133:3333.

18. Budzko, D. B., and F. Kierszenbaum. 1974. Isolation of *Trypanosoma cruzi* from blood. J. Parasitol. 60:1037.

19. Villalta, F., and W. Leon. 1979. Effect of purification by DEAE-cellulose column on infectivity of *Trypanosoma cruzi* blood forms. J. Parasitol. 65:188.

20. Meuer, S. C., J. C. Hodgdon, R. E. Hussey, J. P. Protentis, S. F. Schlossman , and E. L. Reinherz. 1983. Antigen-like effects of monoclonal antibodies directed at receptors of human T cell clones. J. Exp. Med. 158:988.

21. Gillis, S., M. M. Fem , W. Ou, and K. Smith. 1978. T cell growth factor: parameters of production and quantitative microassay for activity. J. Immunol. 120:2027.

22. Uchiyama, T., S. Broder, and T. A. Waldman. 1981. A monoclonal antibody (anti-Tac) reactive with activated and functionally mature human T cells. I. Production of anti-Tac monoclonal antibody and distribtion of Tac(+) cells. J. Immunol. 126:1393.

23. Meltzer, M. S., and J. J. Oppenheim. 1977. Bidirectional amplification of macrophage-lymphocyte interactions: enhanced lymphocyte activation factor production by activated adherent mouse peritoneal cells. J. Immunol. 118:77.

24. Reem, G. H., and N.-H. Yeh. 1984. Interleukin 2 regulates the expression of its receptor and the synthesis of gamma interferon by human T-cells. Science 225:429.

25. Cantrell, D. A., and K. A. Smith. 1983. Transient expression of interleukin 2 receptors. Consequences for T cell growth. J. Exp. Med. 158:1895.

26. Depper, J. M., W. J. Leonard, M. Kronke, P. D. Noguchi, R. E. Cunningham, T. A. Waldmann, and W. C. Greene. 1984. Regulation of interleukin 2 receptor expression: effects of phorbol diester, phospholipase C, and reexposure to lectin or antigen. J. Immunol. 133:3054.

27. Leonard, W. J., M. Kronke, N. J. Peffer, J. M. Depper, and W. C. Greene. 1985. Interleukin 2 receptor gene expression in normal human T lymphocytes. Proc. Natl. Acad. Sci. USA 82:6281.

28. Sharon, M., R. D. Klausner, B. R. Cullen, R. Chizzonite, and W. J. Leonard. 1986. Novel interleukin-2 receptor subunit detected by cross-linking under high-affinity conditions. Science 234:859.

29. Weisman, A. M., J. B. Harford, P. B. Svetlik, W. J. Leonard, J. M. Depper, T. A. Waldmann, and W. C. Greene. 1986. Only high-affinity receptors for interleukin 2 mediate internalization of ligand. Proc. Natl. Acad. Sci. USA 83:1463.

30. Fujii, M., K. Sugamura, K. Sano, M. Nakai, K. Sugita, amd Y. Hinuma. 1986. High-affinity receptor-mediated internalization and degradation of interleukin 2 in human T cells. J. Exp. Med. 163:550.

31. Robb, R. J., and W. C. Greene. 1987. Internalization of interleukin 2 is mediated by the β chain of the high-affinity interleukin 2 receptor. J. Exp. Med. 165:1201.

Chapter 4

Trypanosoma cruzi DECREASES THE EXPRESSION OF BOTH THE INTERLEUKIN 2 AND TRANSFERRIN RECEPTORS BUT NOT EA1, AN EARLY MARKER OF LYMPHOCYTE ACTIVATION

ABSTRACT

Acute infection with Trypanosoma cruzi leads to a state of depressed immune responsiveness, and co-culture of the parasite with normal human peripheral blood mononuclear cells suppresses the ablility of the latter to proliferate upon mitogenic stimulation. We have previously shown that T. cruzi decreases the expression of the interleukin 2 receptor (IL2R), an early lymphocyte activation marker which is required for T cell growth. In order to further explore the initial stages of T. cruzi-induced immunosuppression, we have determined the earliest time at which a reduction in IL2R expression may be seen. T. cruzi was found to suppress the expression of the IL2R as early as 6 to 12 hrs after activation, the earliest times at which this marker is found on the cell surface. Furthermore, this suppression encompasses both the low and the high affinity forms of the receptor. The expression of the transferrin receptor, another growth factor receptor necessary for lymphoproliferation, is also reduced - this decrease not being observed until 48 hrs after stimulation. In contrast, T. cruzi was unable to inhibit the expression of EA1, the earliest reported T cell activation marker, at times ranging from 6 to 24 hrs. Since the expression of the IL2R but not EA1 was decreased at 12 and 24 hrs, the immunosuppression exerted by T. cruzi may be of a selective nature, affecting only specific parameters of lymphocyte activation. This specificity may provide a key in overcoming the parasite-induced immunodepression in the critical early stages of infection.

INTRODUCTION

The acute phase of Trypanosoma cruzi infection is marked by a state of immunosuppression in both men (1,2) and mice (3-11). Co-culture of either normal mouse spleen cells (12) or human peripheral blood mononuclear cells (PBMC) (13) with T. cruzi trypomastigotes also decreases their proliferative response to a variety of mitogens. Several investigators have reported a decrease in interleukin 2 (IL2) production by spleen cells from infected mice (8,9). Since IL2 is a lymphokine required for T cell growth and its addition to cultures of lymphocytes from infected mice was able to restore immunoglobulin production (9-11) and T cell blastogenesis (Chapter 3), it appears that deficient IL2 secretion is responsible for at least some of the manifestations of T. cruzi-induced immunosuppression in mouse spleen cell cultures. This is not the case for human PBMC, where there is no decrease in IL2 production under optimal culture conditions (Chapter 3) and exogenous IL2 is unable to restore mitogen-stimulated T cell proliferation (13). The expression of IL2 receptors (IL2R) on PBMC, however, is inhibited by T. cruzi (Chapter 3). This inhibition was found to occur at 48 hrs after T cell stimulation, at which time receptor expression peaks (14).

In the present report, we have examined the expression of the IL2R over time, in order to discover the earliest point at which T. cruzi affects this activation marker. We also tested whether the decrease included the biologically active high affinity form of the IL2R (15). Finally, we examined the specificity of T. cruzi-induced

immunosuppression by testing the effect of the parasite on the expression of two other T cell surface activation markers.

MATERIALS AND METHODS

Parasites. Trypomastigotes of *T. cruzi* (Tulahuen strain) were isolated from the blood of Crl-CD1(ICR)BR mice (Charles River Laboratory, Portage, MI) infected two weeks previously with 2×10^5 parasites. Purification involved centrifugation over Ficoll-Hypaque (density = 1.077) (16) followed by DEAE-cellulose chromatography (17). After two washings with RPMI 1640 (Gibco, Grand Island, NY) supplemented with 100 units penicillin and 100 μg streptomycin/ml, the parasites were resuspended at a final concentration of 5×10^6 trypomastigotes/ml in the above medium containing 5% heat-inactivated (56°C, 20 min) fetal bovine serum (RPMI+5%FBS).

Peripheral blood mononuclear cells (PBMC). PBMC were isolated as previously described (13) and brought to a final concentration of 1.25×10^6 cells/ml in RPMI+5%FBS.

Indirect immunofluorescence. PBMC were incubated at 37°C for the desired periods of time in 24-well plates in the presence or absence of 5 μg/ml phytohemagglutinin (PHA; Sigma Chemical Co., St. Louis, MO) or OKT3 (Ortho, Raritan, NJ) at a concentration of 12.5 or 25 ng/ml (depending on the batch utilized). The final volume of the cultures ranged from 1.5 to 2 ml. *T. cruzi* was added to some of the cultures at their initiation and replaced an equivalent volume of RPMI+5%FBS. At various times after mitogenic stimulation, cells were removed, washed three times by centrifugation with phosphate-buffered saline containing 1% bovine serum albumin (Sigma) and incubated for 30 min with the desired first antibody [anti-Tac, a gift of Dr. T. A. Waldmann,

National Institutes of Health; OKT9 (Ortho); anti-EA1, a gift of Dr. S. M. Fu, Oklahoma Medical Research Foundation, Oklahoma City, OK; or 12 μg/ml control mouse IgG (Calbiochem, La Jolla ,CA)]. After two washes,the cells were incubated with the second antibody, $F(ab')_2$ fragment of fluorescein-conjugated goat anti-mouse IgG (1:6 dilution; Tago Immunodiagnostics, Burlingame, CA). Cells were fixed in 1% formaldehyde and analyzed in a FACS IV flow cytometer, reading ten thousand PBMC for each condition and gating out T. cruzi and cell debris. The percentage of positive cells in each assay was calculated after subtracting the background labeling obtained with control mouse IgG. The mean channel number of the logarithm of the fluorescence intensities (MFCh) was the parameter used to compare the relative density of the target antigens on the different populations. The logarithm of fluorescence intensities was distributed over 256 channels.

High affinity ^{125}I-IL2 binding assay. PBMC were incubated in the 24-well plates as described above in the presence or absence of 5 μg/ml PHA with or without T. cruzi for 60-65 hrs. The cells were then washed three times by centrifugation with Hank's balanced salt solution, incubated for one hour at 37°C to remove endogenously produced IL2 from the cell surface, washed two additional times, and resuspended in RPMI+10%FBS containing 25 mM HEPES and 0.1% sodium azide (binding medium). One million viable PBMC from each condition were incubated in triplicate with 150 to 200 pM ^{125}I-IL2 (specific activity = 900 Ci/mM; Amersham, Arlington Heights, IL) in binding medium in a total volume of 150 μl for 1 hr at room temperature. This concentration of IL2 allows

binding to high but not low affinity IL2R (18). To determine the level of nonspecific binding, 1 X 10^6 PBMC were incubated in triplicate as described above with 150-fold molar excess of unlabelled IL2 (Cellular Products, Buffalo, NY) replacing an equivalent volume of binding medium. The reaction mixture was then layered over a cushion of 200 μl of Hank's balanced salt solution containing 1 M sucrose and centrifuged at 14,000 X G for 5 min. The supernatant was aspirated and the tip of the tube containing the pellet was analyzed in a gamma counter (Micromedic Systems, Horsham, PA). The level of specific binding was determined by subtracting the mean value of binding not inhibitable by cold IL2 (nonspecific binding) from the mean value of total ^{125}I-IL2 bound to the cells and was expressed in dpm.

RESULTS

The addition of T. cruzi trypomastigotes to cultures of normal PBMC decreased the expression of the IL2R (Tac antigen) (19) following mitogenic stimulation (Table 1). This decrease was seen as early as 12 hrs after activation and persisted until at least 60 hours. In a separate experiment, a reduction was also noted at 6 hrs, the earliest time at which the receptor can be detected at the cell surface (data not shown). The decrease in IL2R expression encompassed both a reduction in the number of Tac positive cells and in the density of the receptor on the positive cells (logarithm of MFCh). Occasionally, the decrease in the former parameter was very small or absent with, nevertheless, a significant decrease in receptor density still occurring (data not shown). Tac expression was inhibited by T. cruzi in response to stimulation by both PHA and OKT3. T. cruzi did not react with anti-Tac, removing the trivial explanation that the parasite was absorbing this antibody and decreasing its availibity to the PBMC.

The anti-Tac antibody reacts with both high and low affinity forms of the IL2R (20) but only the former is believed to be active in signal transmission (21,22). In order to determine whether T. cruzi inhibits the expression of the biologically active form of the IL2R, we next performed binding assays using ^{125}I-IL2 under conditions in which only high affinity binding occurs. The data presented in Table 2 indicate that T. cruzi inhibits the expression of the high affinity IL2R. Indeed, the level of ^{125}I-IL2 binding to PHA-stimulated PBMC co-cultured with the parasite was approximately equal to that found on

Table 1. The Effect of T. cruzi on the Expression of the IL2R by Stimulated PBMC

Time	% Tac+ cells (MFCh of positive cells)			
(hr)	PBMC+PHA	PBMC+PHA+T. cruzi	PBMC+OKT3	PBMC+OKT3+T. cruzi
12	48.3 (103)	15.7 (89)	20.9 (106)	16.1 (94)
24	54.1 (112)	36.0 (88)	14.4 (100)	9.7 (95)
36	58.6 (121)	26.8 (90)	16.9 (101)	12.2 (91)
60	44.3 (123)	34.3 (92)	15.0 (88)	1.3

PBMC were incubated in the presence or absence of PHA (5 μg/ml) or OKT3 (25 ng/ml) and/or T. cruzi (5 X 10^6 organisms/ml) for the indicated periods of time. Indirect immunofluorescence was perfomed as described under Materials and Methods using a 1:1000 dilution of anti-Tac as the primary antibody. Cultures of PBMC incubated alone or in the presence of T. cruzi were tested simultaneously as negative controls; less than 9% of the cells were positive for Tac. This set of results is typically representative of four repeat experiments.

Table 2. The Effect of T. cruzi on the Binding of ^{125}I-IL2 to the IL2R Under High Affinity Conditions

Material	Specific IL2 Binding (dpm)
PBMC	693
PBMC + PHA	1819
PBMC + PHA + T. cruzi	570
T. cruzi	295

PBMC (1 X 10^6 viable cells), which had previously been cultured for 60-65 hrs in the presence or absence of PHA (5 µg/ml) and T. cruzi (5 X 10^6 parasites/ml), were incubated with ^{125}I-IL2 under conditions of high affinity binding (150 pM ^{125}I-IL2; 38,776 dpm) for 1 hr. After removal of unbound radiolabel, the cells were analysed in a gamma counter and nonspecific binding was subtracted from the total amount of bound dpm to yield specific binding. Nonspecific binding was 373, 603, 461, and 668 cpm for PBMC, PBMC+PHA, PBMC+PHA+T. cruzi, and T. cruzi alone, respectively. All binding conditions were tested in triplicate. These results are typically representative of three repeat experiments.

nonactivated PBMC. T. cruzi itself bound insignificant levels of ^{125}I-IL2, indicating that the parasite was not competing with PBMC for the ligand.

The IL2R is one of the first cell surface markers of T lymphocyte activation. Recently, however, an earlier marker has been reported (23). This molecule, named early activation antigen 1 (EA1), is detectable on the surface of T cells 4 hrs after stimulation with PHA and reaches maximal levels of expression at 18 hrs. In order to determine earlier times at which T. cruzi may suppress T cell activation, we next examined whether the parasite affected EA1 expression, and if so, at which time the effect was first observed. The addition of T. cruzi trypomastigotes to cultures of PBMC stimulated with either PHA or OKT3 had no effect on the expression of EA1 at times ranging from 6 to 24 hrs of culture (Table 3). Both the number of EA1 positive cells and the density of EA1 per positive cell were similar in the presence or absence of T. cruzi.

In order to further examine the specificity of the T. cruzi-induced immunosuppression, the possiblity of alterations in the expression of the transferrin receptor (TfR), a late-appearing marker of lymphocyte activation, was explored. T. cruzi inhibited the expression of the TfR on cells tested between 48 and 120 hrs after stimulation with either PHA or OKT3 (Table 4). No decrease was seen when the PBMC were examined at 24 hrs of culture, a time at which low but significant numbers of cells bore TfR on their surfaces. As with the IL2R, the decreased expression entailed both a reduced number of TfR positive cells and a large decrease in the receptor density.

Table 3. Lack of Effect of *T. cruzi* on the Expression of EA1 by Stimulated PBMC

Time	% EA1+ cells (MFCh of positive cells)			
(hr)	PBMC+PHA	PBMC+PHA+*T. cruzi*	PBMC+OKT3	PBMC+OKT3+*T. cruzi*
0	3.7	4.9	4.1	4.5
6	41.9 (79)	52.5 (88)	16.7 (73)	26.9 (71)
12	61.3 (86)	57.0 (87)	21.3 (76)	19.4 (74)
18	61.9 (88)	52.4 (94)	26.6 (77)	33.1 (80)
24	54.2 (89)	51.0 (92)	32.5 (78)	27.9 (81)

PBMC were incubated in the presence or absence of PHA (5 μg/ml) or OKT3 (25 ng/ml) and/or *T. cruzi* (5×10^6 organisms/ml) for the indicated periods of time. Indirect immunofluorescence was perfomed as described under Materials and Methods using a 1:75 dilution of anti-EA1 as the primary antibody. Cultures of PBMC incubated alone or in the presence of *T. cruzi* were tested simultaneously as negative controls; less than 5% of the cells were positive for EA1. This set of results is typically representative of three repeat experiments.

Table 4. The Effect of T. cruzi on the Expression of the TfR by Stimulated PBMC

Time	% TfR+ cells (MFCh of positive cells)			
(hr)	PBMC+PHA	PBMC+PHA+T. cruzi	PBMC+OKT3	PBMC+OKT3+T. cruzi
24	14.6 (97)	13.6 (106)	14.0 (105)	11.6 (109)
48	32.9 (148)	18.8 (128)	32.3 (147)	27.9 (121)
72	43.3 (170)	19.1 (116)	52.1 (160)	24.8 (110)
96	51.8 (172)	19.8 (103)	52.0 (155)	21.4 (104)
120	48.2 (157)	13.2 (103)	42.7 (134)	17.6 (102)

PBMC were incubated in the presence or absence of PHA (5 μg/ml) or OKT3 (12.5 ng/ml) and/or T. cruzi (5 X 10^6 organisms/ml) for the indicated periods of time. Indirect immunofluorescence was perfomed as described under Materials and Methods using OKT9 as the primary antibody and following the manufacture's instructions. Cultures of PBMC incubated alone or in the presence of T. cruzi were tested simultaneously as negative controls; less than 8% of the cells were positive for the TfR. This set of results is typically representative of two repeat experiments.

DISCUSSION

T. cruzi is able to decrease the expression of the IL2R as early as 6 to 12 hrs after activation by either the mitogenic lectin PHA or OKT3, an antibody directed at the T cell antigen receptor complex (24) (Table 1). These times denote the earliest expression of this molecule on the cell surface (14) and indicate that T. cruzi is able to suppress very early during lymphocyte activation. The decrease in the expression of this marker continued until at least 60 hrs, the last time tested. Since IL2R expression peaks at approximately 48 hrs (14), this decrease does not appear to be due to a mere delay in receptor expression.

The IL2R is composed of two chains, p55 and p75 (25-27). The high affinity IL2R (Kd = 10^{-11} to 10^{-12}) is composed of both p55 and p75, while p55 alone is responsible for low affinity interactions with the ligand (Kd = 10^{-8}) (18,27,28). Since physiological levels of IL2 are believed to be insufficient to allow binding to the low affinity receptor (p55) and because p55 has a very short cytoplasmic tail which may not function in signal transduction (21), only the high affinity form of the IL2R is believed to be active in vivo. This hypothesis is strengthened by the finding that cells which express only p55 are unable to transmit a signal for cellular division, but conversion to the high affinity form of the receptor in these cells leads to IL2 responsiveness (22).

The anti-Tac antibody reacts with p55 (19), and thus binds both low (p55) and high (p55+p75) affinity forms of the receptor. Since low

affinity receptors represent approximately 95% of the IL2R on the cell surface (18), immunofluorescence studies using anti-Tac reveal primarily the expression of this form of the receptor. The data in Table 1, therefore, demonstrate a reduction in p55 which occurs mainly in the form of the low affinity receptor. In order to examine the effect of T. cruzi on the levels of the biologically active high affinity IL2R, we performed binding assays with ^{125}I-IL2 under conditions which permit only high affinity binding. The data in Table 2 show that high affinity IL2R are also affected by T. cruzi. In fact, the amount of ^{125}I-IL2 bound by PHA-stimulated PBMC after exposure to T. cruzi was approximately that of unactivated PBMC.

The above noted decrease in high affinity receptor expression is corraborated by studies in which ^{125}I-IL2 was cross-linked under conditions of high affinity binding to the IL2R on the membranes of activated T cells previously incubated in the presence or absence of T. cruzi. Analysis by SDS-PAGE revealed a significant reduction in the levels of both p55 and p75 (Cuna and Kierszenbaum, personal communication). Since all of the p75 present on activated T cells is believed to be coupled with p55, forming high affinity receptors (29), the decrease in p75 expression is a second piece of evidence that T. cruzi decreases the high affinity form of the IL2R.

Reduced levels of Tac have been reported in several pathological conditions, including pulmonary tuberculosis (30), AIDS (31,32), and Trypanosoma brucei infection (33). It should be noted, however, that in the latter case, the reduction is due to action of suppressor cells and is not seen when these trypanosomes are co-cultured with

lymphocytes. β-adrenrgic agonists have also been reported to decrease Tac expression but not high affinity IL2 binding (34), while in systemic lupus erythematosus, the levels of high affinity receptors are decreased while the Tac antigen is unaffected (35). Our finding is the first demonstration, to the best of our knowledge, that an infectious agent is able to directly or indirectly inhibit the expression of high affinity IL2R.

The TfR is another growth factor receptor required for T cell proliferation (36) which is expressed at late stages of lymphocyte activation (37). T. cruzi was also able to inhibit the expression of this receptor (Table 4). This inhibition was observed from 48 to 120 hrs after PBMC activation but was not seen when cells from a 24-hr culture were examined.

The TfR appears on the cell surface after the expression of the IL2R and antibodies to the latter block the appearance of the TfR, suggesting that the IL2R regulates the TfR expression (38). Thus, the decreased expression of the IL2R caused by T. cruzi may lead to the reduction in the levels of the TfR. This may not necessarily be the case, however, since a decrease in the expression of the IL2R is seen in AIDS patients without a corresponding decrease in the TfR (31), demonstrating that the expression of TfR may occur in the absence of normal levels of IL2R and opening the possibility that T. cruzi inhibits each of these receptors independently.

T. cruzi was found to have no effect on the amount of EA1 antigen expressed on PHA- or OKT3-activated PBMC (Table 3). Normal levels of this phosphoprotein were found on PBMC incubated with T. cruzi for 6 to

24 hrs. The lack of inhibition with respect to this marker may be due to either an insufficient time of exposure of the PBMC to the parasite or to a specificity in the effects of T. cruzi upon lymphocyte activation. In regard to the former possibility, it should be noted that IL2R expression is reduced by 12 hrs (Table 1), whereas EA1 is expressed at normal levels as late as 24 hrs after activation (Table 3). As regards the later possibility, we have previously found that under optimal culture conditions, T. cruzi inhibits IL2R expression (Chapter 3) while not affecting the production of IFN-γ (Chapter 2) or IL2 (Chapter 3), indicating that T. cruzi does indeed affect some but not all parameters of lymphocyte activation. This specificity may provide a key in overcoming the parasite-induced immunosuppression in the critical early stages of T. cruzi infection.

REFERENCES

1. **Teixeira, A. R. L., G. Teixeira, V. O. Macêdo, and A. Prata.** 1978. Acquired cell-mediated immunodepression in acute Chagas' disease. J. Clin. Invest. 62:1132.

2. **Voltarelli, J. C., E. A. Donadi, and R. P. Falcao.** 1987. Immunosuppression in human acute Chagas' disease. Trans. Roy. Soc. Trop. Med. Hyg. 81:169.

3. **Clinton, B. A., L. Ortiz-Ortiz, W. Garcia, T. Martinez, and R. Capin.** 1975. Trypanosoma cruzi: early immune responses in infected mice. Exper. Parasitol. 37:417.

4. **Rowland, E. C., and R. Kuhn.** 1978. Suppression of cellular responses in mice during Trypanosoma cruzi infections. Infect. Immun. 20:393.

5. **Ramos, C., I. Schädtler-Siwon, and L. Ortiz-Ortiz.** 1979. Suppressor cells present in the spleens of Trypanosoma cruzi-infected mice. J. Immunol. 122:1243.

6. **Kierszenbaum, F.** 1981. On evasion of Trypanosoma cruzi from the host immune response. Lymphoproliferative responses to trypanosomal antigens during acute and chronic experimental Chagas' disease. Immunology 44:641.

7. **Hayes, M. M., and F. Kierszenbaum.** 1981. Experimental Chagas' disease: kinetics of lymphocyte responses and immunological Control of the transition from acute to chronic Trypanosoma cruzi infection. Infect. Immun. 31:1117.

8. **Harel-Bellan, A., M. Joskowicz, D. Fradelizi, and H. Eisen.** 1983. Modification of T-cell proliferation and interleukin 2 production in mice infected with Trypanosoma cruzi. Proc. Natl. Acad. Sci. USA 80:3466.

9. **Tarleton, R. L., and R. E. Kuhn.** 1984. Restoration of in vitro immune responses of spleen cells from mice infected with Trypanosoma cruzi by supernatants containing interleukin 2. J. Immunol. 133:1570.

10. **Reed, S. G., J. A. Inverso, and S. P. Roters.** 1984. Heterologous antibody responses in mice with chronic T. cruzi infection: depressed T helper function restored with supernatants containing interleukin 2. J. Immunol. 133:1558.

11. **Reed, S. G., J. A. Inverso, and S. P. Roters.** 1984. Suppressed antibody responses to sheep erythrocytes in mice with chronic Trypanosoma cruzi infections are restored with interleukin 2. J. Immunol. 133:3333.

12. **Maleckar, J. R., and F. Kierszenbaum.** 1983. Inhibition of mitogen-induced proliferation of mouse T and B lymphocytes by bloodstream forms of Trypanosoma cruzi. J. Immunol. 130:908.

13. **Beltz, L. A., and F. Kierszenbaum.** 1987. Suppression of human lymphocyte responses by Trypanosoma cruzi. Immunology 60:309.

14. **Depper, J. M., W. J. Leonard, M. Kronke, P. D. Noguchi, R. E. Cunningham, T. A. Waldmann, and W. C. Greene.** 1984. Regulation of interleukin 2 receptor expression: effects of phorbol diester, phospholipase C, and reexposure to lectin or antigen. J. Immunol. 133:3054.

15. **Hatakeyama, M., S. Minamoto, T. Uchiyama, R. R. Hardy, G. Yamada, and T. Taniguchi.** 1985. Reconstitution of functional receptor for human interleukin-2 in mouse cells. Nature 318:467.

16. **Budzko, D. B., and F. Kierszenbaum** 1974. Isolation of Trypanosoma cruzi from blood. J. Parasitol. 60:1037.

17. **Villalta, F., and W. Leon.** 1979. Effect of purification by DEAE-cellulose column on infectivity of Trypanosoma cruzi blood forms. J. Parasitol. 65:188.

18. **Robb, R. J., W. C. Greene, and C. M. Rusk.** 1984. Low and high affinity cellular receptors for interleukin-2: implications for the level of Tac antigen. J. Exp. Med. 160:1126.

19. **Uchiyama, T., S. Broder, and T. A. Waldmann.** 1981. A monoclonal antibody (anti-Tac) reactive with activated and functionally mature human T cells. I. Production of anti-Tac monoclonal antibody and distribution of Tac(+) cells. J. Immunol. 126:1393.

20. **Greene, W. C., and W. J. Leonard.** 1986. The human interleukin-2 receptor. Ann. Rev. Immunol. 4:69.

21. **Leonard, W. J., J. M. Depper, G. R. Crabtree, S. Rudikoff, J. Pumphrey, R. J. Robb, M. Kronke, P. B. Svetlik, N. J. Peffer, T. A. Waldmann, and W. C. Greene.** 1984. Molecular cloning and expression of cDNAs for the human interleukin-2 receptor. Nature 311:626.

22. **Robb, R. J.** 1986. Conversion of low-affinity interleukin 2 receptors to a high-affinity state following fusion of cell membranes. Proc. Natl. Acad. Sci. USA 83:3992.

23. **Hara, T., L. K. L. Jung, J. M. Bjorndahl, and S. M. Fu.** 1986. Human T cell activation. III. Rapid induction of a phosphorylated 28 kD/32 kD disulfide-linked early activation antigen (EA 1) by 12-o-tetradecanoyl phorbol-13-acetate, mitogens, and antigens. J. Exp. Med. 164:1988.

24. **Meuer, S. C., J. C. Hodgdon, R. E. Hussey, J. P. Protentis, S. F. Schlossman, and E. L. Reinherz.** 1983. Antigen-like effects of monoclonal antibodies directed at receptors of human T cell clones. J. Exp. Med. 158:988.

25. **Tsudo, M., R. W. Kozak, C. K. Goldman, and T. A. Waldmann.** 1986. Demonstration of a non-Tac peptide that binds interleukin 2: a potential participant in a multichain interleukin 2 receptor complex. Proc. Natl. Acad. Sci. USA 83:9694.

26. **Sharon, M., R. D. Klausner, B. R. Cullen, R. Chizzonite, W. J. Leonard.** 1986. Novel interleukin-2 receptor subunit detected by cross-linking under high-affinity conditions. Science 234:859.

27. **Robb, R. J., C. M. Rusk, J. Yodoi, and W. C. Greene.** 1987. Interleukin 2 binding molecule distinct from the Tac protein: analysis of its role in formation of high-affinity receptors. Proc. Natl. Acad. Sci. USA 84:2002.

28. **Robb, R. J., A. Munck, and K. A. Smith.** 1981. T cell growth factor receptors: quantitation, specificity, and biological relevance. J. Exp. Med. 154:1455.

29. **Wang, H.-M., and K. A. Smith.** 1987. The interleukin 2 receptor: functional consequences of its bimolecular structure. J. Exp. Med. 166:1055.

30. **Toosi, Z., M. E. Kleinhenz, and J. J. Ellner.** 1986. Defective interleukin 2 production and responsiveness in human pulmonary tuberculosis. J. Exp. Med. 163:1162.

31. **Gupta, S.** 1986. Study of activated T cells in man. II. Interleukin 2 receptor and transferrin receptor expression on T cells and production of interleukin 2 in patients with acquired immune deficiency syndrome (AIDS) and AIDS-related complex. Clin. Immunol. Immunopath. 38:93.

32. **Prince, H. E., and J. K. John.** 1987. Abnormalities of interleukin 2 receptor expression associated with decreased antigen-induced lymphocyte proliferation in patients with AIDS and related disorders. Clin. exp. Immunol. 67:59.

33. **Sileghem, M., R. Hamers, and P. de Baetseller.** 1987. Experimental Trypanosoma brucei infections selectively suppress both interleukin 2 production and interleukin 2 receptor expression. Eur. J. Immunol. 17:1417.

34. **Feldman, R. D., G. W. Hunninghake, and W. L. McArdle.** 1987. β-adenergic receptor-mediated suppression of interleukin 2 receptor in human lymphocytes. J. Immunol. 139:3355.

35. Ishida, H., S. Kumagai, H. Umehara, H. Sano, Y. Tagaya, J. Yodoi, and H. Imura. 1987. Impaired expression of high affinity interleukin 2 receptors on activated lymphocytes from patients with systemic lupus erythematosus. J. Immunol. 139:1070.

36. Brock, J. H., and T. Mainou-Fowler. 1983. The role of iron and transferrin in lymphocyte transformation. Immunol. Today 4:347.

37. Meuer, S. C., R. E. Hussey, M. Fabbi, D. Fox, O. Acuto, K. A. Fitzgerald, J. C. Hodgdon, J. P. Protentis, S. F. Schlossman, and E. L. Reinherz. 1984. An alternative pathway of T-cell activation: A functional role for the 50 kd T11 sheep erythrocyte receptor protein. Cell 36:897.

38. Neckers, L. M., and J. Cossman. 1983. Transferrin receptor induction in mitogen-stimulated human T lymphocytes is required for DNA synthesis and cell division and is regulated by interleukin 2. Proc. Natl. Acad. Sci. USA 80:3494.

CHAPTER 5

SUPPRESSION OF THE CD2 PATHWAY OF HUMAN T CELL ACTIVATION BY *Trypanosoma cruzi*

ABSTRACT

Trypanosoma cruzi suppresses T lymphocyte activation via the T cell antigen receptor-CD3 (CD3-Ti) complex. This immunosuppression involves a decrease in the proliferative responsiveness of human peripheral blood mononuclear cells (PBMC), as well as the expression of interleukin 2 receptors (IL2R), but not the production of interleukin 2 (IL2). In the present report, we have found that T. cruzi also suppressed T cell activation through the CD2 alternative pathway. Proliferative responses of PBMC to anti-$T11_2$ + anti-$T11_3$ were decreased by co-culture with the parasite in a dose-dependent fashion. This decrease was not due to deficient production of IL2, since levels of this lymphokine were actually increased in the presence of T. cruzi, but may be due in part to a decrease in the expression of the IL2R. T. cruzi decreased the percentage of cells expressing the IL2R and the density of this marker following simulation via CD2, although to a lesser degree than following activation by PHA. Both the upregulation of the levels of $T11_2$ of the cell surface and the expression of $T11_3$ were inhibited by the parasite. T. cruzi was thus found to suppress T cell proliferative responses by both the CD3-Ti and the T11 activation pathways.

INTRODUCTION

Trypanosoma cruzi, the parasitic agent of Chagas' disease, causes a state of immunosuppression during the early, acute phase of infection of both humans and mice (1-4). This suppression involves both the cellular and the humoral arms of the immune response in infected mice (5-8). Co-culture of T. cruzi trypomastigotes with lymphocytes from normal mice or humans also decreases the proliferative response of these cells to mitogens (9,10) and, in the case of human peripheral blood mononuclear cells (PBMC), to anti-CD3 (Chapter 3), an antibody directed against the CD3-Ti T cell antigen receptor complex (11). The ability of T. cruzi to suppress responses of normal PBMC may lie, at least in part, in a reduction in the expression of the IL2R (Chapter 3). This reduction is not accompanied by a decrease in the production of IL2 under optimal culture conditions (Chapter 3).

In addition to the well-characterized CD3-Ti pathway of T lymphocyte activation, several antigen-independent pathways have recently been reported (12-14). Of these, the CD2 pathway is best characterized (reviewed in 15). CD2 [T11, the sheep erythrocyte receptor, lymphocyte function-associated antigen-2 (LFA-2)] is a 50 kD polypeptide that is expressed on all thymocytes and mature T cells (15). Meuer et al (12) produced monoclonal antibodies which reacted with three distinct epitopes on CD2. The $T11_1$ and $T11_2$ epitopes are expressed on all T cells and are upregulated upon activation, while $T11_3$ is found only on activated T cells and thymocytes. Anti-$T11_2$ antibody was also found to rapidly induce $T11_3$ expression (within 30

min) (12). The combination of anti-$T11_2$ and anti-$T11_3$ antibodies induces resting T cells to produce IL2 (16), express IL2R (16), and divide (12). Since CD2 is not associated with CD3-Ti on the cell surface (17), it thus represents an alternative pathway of T cell activation.

In the present study, we have examined the effect of T. cruzi on T cell activation through the CD2 alternative pathway and compared these results with our previous findings with the CD3-Ti pathway.

MATERIALS AND METHODS

Parasites. T. cruzi trypomastigotes (Tulahuen strain) were isolated from the blood of Crl-CD1(ICR) Swiss mice (Charles River Laboratories, Portage, MI) infected intraperitoneally with 2 X 10^5 parasites two weeks previously. The trypomastigotes were purified by centrifugation (350 X g, 45 min, 20°C) over Ficoll-Hypaque of density 1.077 (18) and DEAE-cellulose chromatography (19). After two washings with RPMI 1640 medium (Gibco, Grand Island, NY) supplemented with 100 units of penicillin and 100 μg streptomycin/ml, the parasites were resuspended at the desired concentrations in the above medium containing 5% heat-inactivated (56°C, 20 min) fetal bovine serum (RPMI+5%FBS).

Peripheral blood mononuclear cells (PBMC). PBMC were isolated from the venous blood of normal donors by centrifugation over Ficoll-Hypaque as described above. After three washings in RPMI, the PBMC were resuspended at a final concentration of 1.25 X 10^6 cells/ml. Cell viability, as determined by trypan blue dye exclusion, was always >99%.

Proliferation assay. PBMC were incubated in 96-well plates in a volume of 0.1 ml in the presence or absence of either 5 μg/ml phytohemagluttinin (PHA; Sigma Chemical Co., St. Louis, MO), 25 ng/ml OKT3 (Ortho Diagnostics, Raritan, NJ), an antibody reactive with CD3, or a 1:100 dilution of anti-$T11_2$ and anti-$T11_3$ monoclonal antibodies (reactive with two distinct epitopes of CD2; generous gifts of Dr. S. F. Schlossman, Dana-Farber Cancer Institute, Boston, MA). Some wells also contained T. cruzi at concentrations ranging from 2.5 to 10 X 10^6

parasites/ml, which replaced an equal volume of RPMI+5%FBS. Cultures were incubated at 37°C, 5% CO_2 for 96 hrs, with 1 μCi of ^{3}H-thymidine (specific activity = 2.0 Ci/mmole; New England Nuclear Biotechnology Systems, Wilmington, DE) being present during the final 24 hrs. Cultures were terminated by automated harvesting and the levels of incorporated radioactivity were determined in a liquid scintillation counter. Results were expressed as mean counts per minute (cpm) $\pm$ 1 standard deviation of triplicate cultures.

IL2 Assay. PBMC were incubated in 24-well plates in a volume of 1.5 ml in the presence or absence of 5 μg PHA/ml or a 1:100 dilution of anti-$T11_2$ + anti-$T11_3$ antibodies with or without 5 X 10^6 T. cruzi/ml. At 48 of incubation, cultures were centrifuged (350 X g, 10 min, 4°C) and the supernatant was clarified by filtration through 0.22 μm-pore-size filters and stored at -20° C until assayed for IL2. IL2 activity was determined using the IL2-dependent CTLL-2 cell-line as previously described (10). Results are expressed as units IL2/ml in reference to a standard IL2 preparation of 48-hr concanavalin A-stimulated rat spleen cell supernatants which was assigned a value of 1000 units/ml (20).

Expression of the IL2R. The cell pellet of the above described cultures was washed three times with phosphate-buffered saline containing 1% bovine serum albumin (PBS-BSA) and subsequently incubated for 30 min with a fluorescein-conjugated antibody directed against the IL2R, anti-2A3 (Becton-Dickinson, Mountain View, CA), following the manufacturer's instructions. After fixation in 1% formalin, PBMC (10,000 cells per condition) were analyzed in a FACS IV flow cytometer

gated to exclude T. cruzi and cell debris. The percentage of $IL2R^+$ cells was calculated after subtracting the background of nonspecific labeling with fluorescein-conjugated anti-keyhole limpet hemacyanagin (Becton-Dickinson). The mean channel number of the logarithm of the fluorescence intensities (MFCh), distributed over 256 channels, was used to compare the relative density of the IL2R on the different positive populations.

Determination of the expression of $T11_2$ and $T11_3$. Cultures of PBMC set up in 24-well plates in the presence or absence of PHA as described above were incubated for periods of time ranging from 6 to 24 hrs, washed with PBS-BSA, and incubated for 30 min with a 1:150 dilution of $T11_2$ or $T11_3$, or with control mouse IgG (Calbiochem, La Jolla, CA). After two washes with PBS-BSA, cells were incubated for 30 min with fluorescein-conjugated $F(ab')_2$ goat anti-mouse IgG and analysed by flow cytometry as described above. The percentages of PBMC expressing $T11_2$ and $T11_3$ were calculated after subtracting the background of nonspecific labeling obtained with the control mouse IgG, and the MFCh was used to determine the densities of these epitopes.

RESULTS

T. cruzi decreased the proliferative capacity of PBMC stimulated via either the CD3-Ti or the CD2 pathways of T lymphocyte activation (Table 1). The decreased responsiveness was dependent upon parasite concentration, with low levels of suppression being observed when 2.5 X 10^6 T. cruzi/ml were used, and the extent of suppression increased when the parasite concentrations were raised to 7.5 or 10 X 10^6 organisms/ml.

T. cruzi did not reduce IL2 production by PBMC after stimulation with PHA or anti-CD2. Indeed, IL2 levels in the anti-CD2-stimulated cultures were increased by the presence of T. cruzi (data not shown). A small increase in IL2 concentrations is occassionally also noted when PHA or anti-CD3 is the stimulant (Chapter 3). The expression of the IL2R was decreased by T. cruzi following activation by PHA or anti-CD2 (Table 2). This decrease was seen both in the number of $IL2R^+$ cells and in the density of the receptor on the positive cells. When anti-CD2 was used in activation, the decrease was of a lesser extent than that observed with PHA. It should be noted that T. cruzi does not bind anti-IL2R antibodies (Chapters 3 and 4), therefore, the decrease in the levels of IL2R observed on the PBMC was not due to the parasite reducing the availability of antibodies to these cells.

Table 1. T. cruzi Inhibits Blastogenesis by Both the T Cell Receptor and CD2 Pathways[a]

	^{3}H-TdR incorporation (cpm x 10^{-3}) in the presence of the following concentrations of T. cruzi (x 10^{-6}/ml):				
Stimulus	0	2.5	5.0	7.5	10.0
PHA	61.7 ± 3.0	20.9 ± 1.1	6.3 ± 0.1	3.1 ± 0.5	1.8 ± 0.3
anti-CD3	37.2 ± 2.6	22.1 ± 1.4	12.0 ± 0.5	5.6 ± 0.3	2.3 ± 0.4
anti-CD2	14.2 ± 0.5	6.5 ± 0.2	2.4 ± 0.1	0.9 ± 0.3	0.4 ± 0.1

[a] PBMC were incubated for 96 hrs in the presence or absence of PHA, anti-CD3, or anti-T11$_2$ + anti-T11$_3$ (anti-CD2 antibodies) with or without T. cruzi in 96-well plates. One μCi of ^{3}H-thymidine (^{3}H-TdR) was present per well during the last 24 hrs. All differences between values obtained for cultures with and without T. cruzi are statistically significant ($P \leq 0.05$, Student's "t" test). These results are typically representative of three separate repeat experiments.

Table 2. The Effect of T. cruzi on IL2R Expression After Stimulation by either PHA or anti-CD2[a]

Stimulus	T. cruzi	% IL2R$^+$ cells	MFCh[b]
PHA	-	55.7	161
PHA	+	35.9	112
anti-CD2	-	48.9	167
anti-CD2	+	41.0	124

[a] PBMC were incubated for 48 hrs in the presence or absence of PHA or anti-$T11_2$ + anti-$T11_3$ (anti-CD2 antibodies) and/or T. cruzi (5 X 10^6 organisms/ml). IL2R expression was determined as described under Materials and Methods. Less than 6% of the PBMC incubated in the absence of PHA or anti-CD2 expressed IL2R. These results are typically representative of three separate repeat experiments.

[b] MFCh, mean channel number of the logarithm of the fluorensence intensities of positive cells.

DISCUSSION

T. cruzi decreased the proliferative responses of PBMC stimulated by either PHA, anti-CD3, or anti-CD2 (Table 1). This suppression was observed with concentrations of T. cruzi ranging from 2.5 to 10 X 10^6 parasites/ml in a dose-dependent fashion. Since the CD2 pathway has recently been demonstrated to be only active in memory T cells and not in naive T cells (J. A. Byne, J. L. Butler, E. L. Reinherz, and M. D. Cooper, Abst. Ann. Meet. Fed. Amer. Soc. Exper. Biol. 1988, FASEB J., vol.2, p. A1240.), the data in Table 1 are the first demonstration of the ability of T. cruzi to suppress responses of memory T lymphocytes.

Anti-CD3 is an antibody directed against the CD3-Ti antigen receptor complex and triggers T cell activation through this molecule (11). CD2 is a marker found on all thymocytes and mature T lymphocytes whose cell surface expression is upregulated upon lymphocyte activation (21). Two antibodies directed against the $T11_2$ and $T11_3$ epitopes of CD2 are able to act in concert to stimulate IL2 production (16), IL2R expression (16), and cell division (12). The antibody to $T11_2$, an epitope found on all resting T cells, is able to induce a conformational change in CD2 which allows the expression of the $T11_3$ epitope (12). The subsequent engagement of $T11_3$ by antibody then leads to the above noted events. Since CD2 is not associated with the CD3-Ti complex on the cell surface (17) and since it is operative in the stimulation of $CD3^-$ thymocytes (16), it thus constitutes an alternative pathway of T cell activation. Since this pathway does not require the presence of monocytes (12), the data in Table 1 demonstrate that T.

cruzi is able to exert its suppressive effect directly upon the T lymphocytes.

T. cruzi was previously found not to decrease the production or secretion of IL2 by PBMC stimulated by PHA or anti-CD3 under optimal culture conditions (Chapter 3). The presence of T. cruzi in PBMC cultures increased the levels of IL2 following stimulation by anti-CD2. This is occassionally also seen when PHA or anti-CD3 is used as the mitogen (Chapter 3). The underlying cause of the augmentation in IL2 levels is not clear at this time, but may have resulted from a decrease in the ability of the PBMC to internalize and degrade this lymphokine. Alternatively, IL2 production may be increased by the presence of T. cruzi in the cultures. In this regard, it should be noted that T. cruzi does not release IL2 nor does it induce resting lymphocytes to do so (data not shown). It has also been found that the parasite does cause a reduction in IL2 production under supraoptimal stimulatory conditions (5×10^6 PBMC/ml, $\geq$ 25 μg PHA/ml; 10).

Since T cells exposed to T. cruzi demonstrate a reduced capacity to proliferate in the face of normal or above normal levels of IL2, we next examined the effect of the parasite on the expression of the IL2R. As was previously reported (10), T. cruzi inhibited the expression of the IL2R on PHA-stimulated PBMC (Table 2). Both the number of $IL2R^+$ cells and the density of the receptor on the positive cells was decreased. Similar results were obtained when anti-CD2 was used as the stimulant, although the reduction was less pronounced than that seen in PHA-stimulated cultures (Table 2).

Preliminary results indicate that the upregulation of the $T11_2$

epitope of CD2 and the expression of the $T11_3$ epitope of this molecule which occur during the first 6 to 12 hrs of lymphocyte activation were inhibited by the presence of T. cruzi in the cultures (data not shown). Work is currently in progress to determine the kinetics of the suppressed expression of these epitopes. Since T. cruzi decreases both the number of activated cells bearing $T11_2$ and $T11_3$ and the densities of these epitopes on positive cells (data not shown), it is thus possible that these events are at least partially responsible for the suppressed proliferative responses of lymphocytes triggered via the CD2 activation pathway.

The ligand for the $T11_2$ epitope of CD2 has recently been identified as lymphocyte function-associated antigen-3 (LFA-3), a glycoprotein present in endothelial, epithelial, and connective tissues, as well as on most blood cells (15,22,23). While resting T cells bind to a LFA-3-like molecule on sheep erythrocytes, resulting in rosetting (23), only activated T cells with enhanced expression of CD2 are able to bind autologous erythrocytes which bear lower levels of LFA-3 than their ovine counterparts (23,24). The binding of T lymphocytes to the LFA-3-like molecule on sheep erythrocytes allows subsequent activation by anti-$T11_3$ (25). The putative natural ligand for the $T11_3$ epitope awaits identification.

The role of the CD2 alternative pathway of T cell activation is not completely understood at this time. However, this pathway may be of particular importance for the activation of $CD3^-$ thymocytes by $LFA\text{-}3^+$ thymic epithelial cells during ontogeny (26-28). The upregulation of CD2 and the expression of the $T11_3$ epitope on activated mature T

lymphocytes may enhance activation via CD3-Ti and increase the avidity of T cell interactions with other $LFA3^+$ hematopoietic cells (15,29).

While the CD3-Ti complex and CD2 are distinct entities and not associated on the cell surface (17), these two activation pathways do have mutual regulatory interactions. For example, the removal of CD3 from the cell surface blocks activation via CD2 (12). Furthermore, stimulation by the CD2 pathway induces phosphorylation of CD3 (30). It appears, therefore, that the CD3-Ti and CD2 pathways involve separate signals transmitted through separate and distinct receptors, each system, nevertheless, being able to exert regulatory effects upon the other. Our findings indicate that T. cruzi is able to inhibit T lymphocyte activation through both of these pathways.

REFERENCES

1. Teixeira, A. R. L., G. Teixeira, V. O. Macedo, and A. Prata. 1978. Acquired cell-mediated immunodepression in acute Chagas' disease. J. Clin Invest. 62:1132.

2. Voltarelli, J. C., E. A. Donadi, and R. P. Falcao. 1987. Immunosuppression in human acute Chagas disease. Trans. Roy. Soc. Trop. Med. Hyg. 81:169.

3. Hayes, M. M., and F. Kierszenbaum. 1981. Experimental Chagas' disease: kinetics of lymphocyte responses and immunological control of the transition from acute to chronic Trypanosoma cruzi infection. Infect. Immun. 31:1117.

4. Kierszenbaum, F. 1981. On evasion of Trypanosoma cruzi from the host immune response. Lymphoproliferative responses to trypanosmal antigens during acute and chronic experimental Chagas' disease. Immunology 44:641.

5. Rowland, E. C., and R. E. Kuhn. 1978. Suppression of cellular responses in mice during Trypanosoma cruzi infection. Infect. Immun. 20:393.

6. Reed, S. G., C. L. Larson, and C. A. Speer. 1977. Suppression of cell-mediated immunity in experimental Chagas' disease. Z. Parasitenk. 52:11.

7. Rowland, E. C., and R. E. Kuhn. 1978. Suppression of anamnestic cellular responses during American trypanosomiasis. J. Parasitol. 64:741.

8. Clinton, B. A., L. Ortiz-Ortiz, W. Garcia, T. Martinez, and R. Capin. 1975. Trypanosoma cruzi: early immune responses in infected mice. Exp. Parasitol. 37:417.

9. Maleckar, J. R., and F. Kierszenbaum. Inhibition of mitogen-induced proliferation of mouse T and B lymphocytes by bloodstream Forms of Trypanosoma cruzi. J. Immunol. 130:908.

10. Beltz, L. A., and F. Kierszenbaum. 1987. Suppression of human lymphocyte responses by Trypanosoma cruzi. Immunology 60:309.

11. Meuer, S. C., K. A. Fitzgerald, R. E. Hussey, J. C. Hodgdon, S. F. Schlossman, and E. L. Reinherz. 1983. Clonotypic structures involved in antigen specific human T cell function: relation to the CD3 molecular complex. J. Exp. Med. 157:795.

12. Meuer, S. C., R. E. Hussey, M. Fabbi, D. Fox, O. Acuto, K. A. Fitzgerald, J. C. Hodgdon, J. P. Protentis, S. F. Schlossman, and E. L. Reinherz. 1984. An alternative pathway of T-cell

activation: a functional role for the 50 kd T11 sheep erythrocyte receptor protein. Cell 36:897.

13. Hara, T., S. M. Fu, and J. A. Hansen. 1985. Human T cell activation. II. A new activation pathway used by a major T cell population via a disulfide-bonded dimer of a 44 kilodalton polypeptide (9.3 antigen). J. Exp. Med. 161:1513.

14. Carrel, S., S. Salvi, L. Giuffre, P. Isler, and J.-C. Cerottini. 1987. A novel 90-kDa polypeptide (Tp90) possibily involved in an antigen-independent pathway of T cell activation. Eur. J. Immunol. 17:835.

15. Springer, T. A., M. L. Dustin, T. K. Kishimoto, and S. D. Marlin. 1987. The lymphocyte function-associated LFA-1, CD2, and LFA-3 molecules: cell adhesion receptors of the immune system. Ann. Rev. Immunol. 5:223.

16. Fox, D. A., R. E. Hussey, K. A. Fitzgerald, A. Bensussan, J. F. Daley, S. F. Schlossman, and E. L. Reinherz. 1985. Activation of human thymocytes via the 50KD T11 sheep erythrocyte binding protein induces the expression of interleukin 2 receptors on both $T3^+$ and $T3^-$ populations. J. Immunol. 134:330.

17. Meuer, S. C., O. Acuto, R. E. Hussey, J. C. Hodgdon, K. A. Fitzgerald, S. F. Schlossman, and E. L. Reinherz. 1983. Evidence for the T3-associated 90 kd heterodimer as the T cell antigen receptor. Nature 303:808.

18. Budzko, D. B. and F. Kierszenbaum. 1974. Isolation of Trypanosoma cruzi from blood. J. Parasitol. 60:1037.

19. Villalta, F., and W. Leon. 1979. Effect of purification by DEAE-cellulose column on infectivity of Trypanosoma cruzi blood forms. J. Parastiol. 65:188.

20. Gillis, S., M. M. Ferm, W. Ou, and K. Smith. 1978. T cell growth factor: parameters of production and quantitative microassy for activity. J. Immunol. 120:2027.

21. Bernard, A., C. Gelin, B. Raynal, D. Pham, C. Gosse, and L. Boumsell. 1982. Phenomenon of human T cell rosetting with sheep erythrocytes analysed with monoclonal antibodies. J. Exp. Med. 155:1317.

22. Hunig, T. R. 1986. The ligand of the erythrocyte receptor of T lymphocytes: expression on white blood cells and possible involvement in T cell activation. J. Immunol. 136:2103.

23. Selvaraj, P., M. L. Dustin, R. Mitnacht, T. Hunig, T. A. Springer, and M. L. Plunkett. 1987. Rosetting of human T lymphocytes with sheep and human erythrocytes: comparison of human and sheep ligand binding using purified E receptor. J. Immunol. 139:2690.

24. Makgoba, M. W., S. Shaw, E. D. Gugel, and M. E. Sanders. 1987. Human T cell rosetting is mediated by LFA-3 on autologous erythrocytes. J. Immunol. 138:3587.

25. Hunig, T., G. Tiefenthaler, K.-H. M. zum Buschenfelde, and S. C. Meuer. 1987. Alternative pathway of activation of T cells by binding of CD2 to its cell-surface ligand. Nature 326:298.

26. Vollger, L. W., D. T. Tuck, T. A. Springer, B. F. Hayes, and K. H. Singer. 1987. Thymocyte binding to human thymic epithelial cells is inhibited by monoclonal antibodies to CD2 and LFA-3 antigens. J. Immunol. 138:358.

27. Blue, M.-L., J. F. Daley, H. Levine, K. A. Craig, and S. F. Schlossman. 1987. Activation of immature cortical thymocytes through the T11 sheep erythrocyte binding protein. J. Immunol. 138:3108.

28. Denning, S. M., D. T. Tuck, L. W. Vollger, T. A. Springer, K. H. Singer, and B. F. Haynes. Monoclonal antibodies to CD2 and lymphocyte function-associated antigen 3 inhibit human thymic epithelial cell-dependent mature thymocyte activation. J. Immunol. 139:2573.

29. Shaw, S., and G. E. G. Luce. 1987. The lymphocyte function associated antigen (LFA)-1 and CD2/LFA-3 pathways of antigen-independent human T cell adhesion. J. Immunol. 139:1037.

30. Breitmeyer, J. B. 1987. How T cells communicate. Nature 329:760.

APPENDIX I

Appendix I

T. cruzi Mediates its Suppressive Effect Via a Secreted Factor

The addition of T. cruzi trypomastigotes to cultures of normal human PBMC has been shown in the preceding chapters to suppress the proliferative response as well as the expression of the IL2R by these cells while the production of IL2 was unaltered. In order to determine whether this immunosuppression requires direct cell-to-parasite contact or whether a secreted suppressive factor exists, we tested the immunosuppressive ability of T. cruzi in the presence or absence of direct cell-to-parasite contact.

T. cruzi trypomastigotes were purified from the blood of infected mice as previously described (1) and resuspended at a final concentration of 5 X 10^6 parasites/ml in RPMI 1640 medium (Gibco, Grand Island, NY) containing 100 units penicillin and 100 µg streptomycin per ml and 5% heat-inactivated (56°C, 20 min) fetal bovine serum (RPMI+5%FBS). Human PBMC were isolated as previously described (1) and resuspended at a final concentration of 1.25 X 10^6 cells/ml in RPMI+5%FBS. In order to test whether direct cell-to-parasite contact is required for T. cruzi to inhibit the proliferative response of PBMC to mitogens, PBMC were placed in the wells of 24-well plates in the presence or absence of 5 µg/ml phytohemagglutinin (PHA; Sigma Chemical Company, St. Louis, MO). To each well, a Millicell-HA insert was added (Millipore, Bedford, MA). This insert contains a 0.45 µm-pore-size filter which allows only the passage of soluble material between the

two compartments. The volumes of medium on the inside and outside of the insert were 0.4 and 0.5 ml, respectively. T. cruzi was present in some of the cultures either on the outside of the insert (allowing direct contact with the PBMC) or within the insert (no direct contact) and replaced an equal volume of RPMI+5%FBS. Cultures were pulsed with 5 μCi of ^{3}H-thymidine 72 hr after initiation and harvested at 78 to 96 hr. In some experiments, the inserts were removed at various times of culture and replaced with new inserts containing 0.4 ml of RPMI+5%FBS and 5 μg/ml PHA.

The ability of PBMC to produce IL2 was tested by measuring the IL2 activity in 48-hr supernatants of cultures set up as described above. IL2 activity was determined using the IL2-dependent CTLL-2 cell line (1).

The expression of the IL2R was measured on PBMC in the presence or absence of direct cell-to-parasite contact 48 hr after mitogenic stimulation (Chapter 3). Results were expressed as the percentage of Tac^{+} cells and mean channel number of the logarithm of the fluorescence intensites of the positive cells.

The data presented in Tables 1 through 3 are typically representative of two to six separate repeat experiments of similar design.

T. cruzi was able to suppress the proliferative responses of PBMC to PHA whether or not the cells and parasites were separated by a Millicell filter (Table 1). Indeed, the suppressive capacity of T. cruzi was the same in both conditions. It thus appears that the immunosuppressive effects of T. cruzi are mediated by a secreted suppressive factor(s) (SSF). Whether this factor(s) originated

Table 1. T. cruzi Suppresses Human PBMC Proliferation in the Absence of Direct Contact with the Cells[a]

PHA (5 μg/ml)	T. cruzi	^{3}H-thymidine incorporation (cpm x 10^{-3})
-	-	1.3 ± 0.9
+	-	51.6 ± 5.9
+	contact[b]	21.3 ± 4.1
+	no contact	28.7 ± 2.3

[a] Ninety-six hr cultures pulsed with 5 μCi ^{3}H-thymidine at 72 hr.

[b] "Contact" refers to the presence of direct contact between PBMC and T. cruzi. "No contact" denotes that T. cruzi was separated from the PBMC by a Millicell filter.

intracellularly or was released from the parasite's plasma membrane is not known.

Next, the suppressive effects of 24 to 96 hr supernatants of T. cruzi trypomastigote cultures were tested. While 5 x 10^6 parasites/ml were able to decrease mitogen-induced lymphoproliferation, the supernatants of these cultures as well as the supernatant of 1 x 10^7 T. cruzi/ml did not effect the incorporation of ^{3}H-thymidine by PHA-stimulated PBMC (data not shown). Since both PBMC and PHA were also present in the cultures and PHA binds to and agglutinates T. cruzi (2), it is thus possible that this mitogen or a cell product induces the release of SSF. To examine this possibility, the suppressive activity of 24 to 96 hr culture supernatants of 5 x 10^6 T. cruzi/ml alone, T. cruzi + 5 μg/ml PHA, T. cruzi + 1.25 x 10^6 PBMC/ml, or T. cruzi + PBMC + PHA were tested; none of them suppressed mitogen-induced proliferation of PBMC (data not shown). Thus, the SSF appears to be labile or degraded, complicating attempts to purify and characterize this molecule(s).

Further support for the lability of SSF were the results of studies in which the insert containing T. cruzi was removed and replaced with a new insert lacking parasites at 24, 48, or 72 hr. These cultures were pulsed with ^{3}H-thymidine at 72 hr and harvested 6, 12, or 24 hr later. When the inserts containing T. cruzi remained in the cultures for the duration of the experiment, the proliferative responses were decreased approximately 85% compared to PBMC stimulated in the absence of the parasite (Table 2). When the inserts were removed at 72 hr (at the time of the pulse) and harvested 6 hr later,

Table 2. The Suppressive Effect of SSF is Reversible[a]

	time of	^{3}H-thymidine incorporation (cpm x 10^{-3})		
T. cruzi	insert removal	6 hr[b]	12 hr	24 hr
none	-	61.4 ± 6.5	61.7 ± 10.2	77.4 ± 22.2
contact	-	9.2 ± 0.8	8.2 ± 1.6	15.9 ± 1.2
		(85)[c]	(87)	(79)
no contact	-	8.4 ± 1.2	7.4 ± 1.6	11.6 ± 2.4
		(86)	(88)	(85)
no contact	72 hr	11.5 ± 3.2	14.9 ± 4.6	36.6 ± 2.7
		(81)	(76)	(53)
no contact	48 hr	38.7 ± 4.0	50.4 ± 6.1	85.3 ± 5.1
		(37)	(18)	(-10)
no contact	24 hr	45.1 ± 4.2	40.3 ± 8.0	82.5 ± 1.9
		(26)	(35)	(-6)

[a] PBMC were incubated with 5 μg/ml PHA in the presence or absence of T. cruzi. All cultures were pulsed with 5 μCi ^{3}H-thymidine 72 hr after initiation. "Contact" refers to the presence of direct contact between PBMC and T. cruzi. "No contact" denotes that T. cruzi was separated from the PBMC by a Millicell filter.

[b] Cultures were harvested 6, 12, or 24 hr after the pulse.

[c] Percent decrease in comparison to the corresponding cultures lacking T. cruzi.

the extent of the suppression (81%) was approximately the same as in those cultures still containing T. cruzi, but as the time after parasite removal increased (12 and 24 hr pulses), the suppressive effect decreased (76 and 53%, respectively). This decrease in suppression over time was seen to a greater extent in those cultures in which the inserts containing parasites were removed at 48 or 24 hr of culture (Table 2). Since only the parasites themselves and not the SSF was removed, these results suggest that the suppression is reversible and that SSF is labile and must be continuously produced in order to be effective. The lability of SSF may either be intrinsic or may be due to PBMC internalizing and degrading the molecule.

In order to determine whether the immunosuppression caused by T. cruzi and the SSF are similar, several other parameters of lymphocyte activation were examined. No decrease in the production of IL2 under optimal culture conditions was caused by either T. cruzi or SSF (Table 3). In contrast, SSF was able to inhibit the expression of the IL2R (Table 4) as had been previously shown for T. cruzi (Chapter 3).

In summary, T. cruzi appears to secrete a soluble suppressive factor which is labile and whose effects are reversible. Both T. cruzi and its SSF decrease mitogen-induced proliferation and the expression of IL2R while not affecting the production of IL2.

Table 3. Exposure of PBMC to the SSF did not Inhibit IL2 Production[a]

Supernatant tested	^{3}H-thymidine incorporation (cpm x 10^{-3}) by CTLL-2 in the presence of the supernatants diluted:			
	1:2	1:4	1:8	1:16
PBMC	0.4 ± 0.0	0.3 ± 0.0	0.3 ± 0.0	0.3 ± 0.0
PBMC+PHA	20.6 ± 1.7	12.0 ± 1.7	5.1 ± 0.8	1.7 ± 0.4
PBMC+PHA+*T. cruzi*	29.3 ± 1.6	16.4 ± 0.6	8.7 ± 1.8	3.2 ± 0.3
PBMC+PHA+SSF	27.0 ± 3.2	12.7 ± 0.7	7.1 ± 2.5	2.6 ± 0.5

[a] Forty-eight-hr supernatants of the indicated cultures were tested for IL2 activity using the IL2-dependent CTLL-2 cell line. ^{3}H-thymidine incorporation by CTLL-2 cells incubated in RPMI+10%FBS = 0.4 ± 0.2. Similar incorporation was produced by CTLL-2 incubated in the culture supernatants of unstimulated PBMC cultured in the presence of *T. cruzi*.

Table 4. IL2R Expression is Decreased by the T. cruzi SSF[a]

T. cruzi	% Tac$^+$ cells	MFCh[b]
-	51.3	140
no contact	46.2	130

[a] PBMC were incubated for 48 hr with PHA (5 μg/ml) in the presence or absence of T. cruzi prior to staining for the Tac antigen. "No contact" denotes that T. cruzi was separated from the PBMC by a Millicell filter. Less than 5% of the PBMC incubated alone or exposed to SSF in the absence of PHA were positive for Tac.

[b] The density of the Tac antigen expressed as the mean channel number of the logarithm of the fluorescence intensities distributed over 256 channels.

REFERENCES

1. Beltz, L.A., and F. Kierszenbaum. 1987. Suppression of human lymphocyte responses by Trypanosoma cruzi. Immunology 60:309.

2. Pereira, M.E.A., M.A. Loures, F. Villalta, and A.F.B. Andrade. 1980. Lectin receptors as markers for Trypanosoma cruzi. Developmental stages and a study of the interaction of wheat germ agglutinin with sialic acid residues on epimastigote cells. J. Exp. Med. 152:1375.

APPENDIX II

APPENDIX II

T. cruzi Inhibits the Growth of Several but not all Immortalized Cell Lines

Lymphocyte activation involves a series of temporally distinct events as the cells move from the G_0 resting stage into the G_1 stage of the cell cycle and thence onward to nuclear and cytoplasmic divisions (1,2). The ability of T. cruzi to suppress T cell proliferative responses to mitogenic stimulation may lie in the inhibition of any one or more of these events. Immortalized cell lines, however, have already entered the cell cycle and therefore bypass several of the activation requirements. It is thus possible that these cell lines are no longer dependent upon the activation event(s) which T. cruzi inhibits and may subsequently escape the antiproliferative effects of the parasite. In order to explore this possibility, we have tested the ablility of T. cruzi to decrease the growth of several cell lines.

T. cruzi trypomastigotes were isolated from the blood of mice at two weeks post-infection as previously described (3) and resuspended at the desired concentrations in RPMI 1640 medium (Gibco, Grand Island, NY) containing 100 units penicillin and 100 μg streptomycin per ml and 10% heat-inactivated (56°C, 20 min) fetal bovine serum (RPMI+10%FBS), or supernatants of concanavalin A-stimulated rat spleen cells (rat IL2) for the studies using CTLL-2 cells. The murine IL2-dependent CTLL-2 cell line (American Type Culture Collection), maintained by passage in rat IL2 in a similar fashion to that previously described for HT-2

cells (3), was centrifuged once prior to use in the proliferation assay and was resupended at a final concentration of 2 X 10^4 cells/ml in rat IL2. The human nonadherant myelocytic U937 cell line (American Type Culture Collection) and the human T-lymphotropic virus type 1 (HTLV-1)-infected HUT 102B2 cell line (4; provided by Dr. Warren Leonard, National Institutes of Health, Bethesda, MD) were maintained by passage in RPMI+10%FBS and brought to final concentrations of 1 X 10^5 and 5 X 10^5 cells/ml, respectively, in the same medium.

To test the ability of T. cruzi to inhibit the proliferation of these cell lines, cells were incubated at the previously indicated concentrations for 24 or 48 hr in the presence or absence of serial dilutions of the parasite. CTLL-2 and HUT cells were incubated in 96-well plates in a volume of 0.2 and 0.1 ml, respectively, while U937 cultures were set up in 24-well plates containing Millicell filter inserts (Millipore, Bedford, MA) in a volume of 0.9 ml (as described in Appendix I) to avoid cell infection. Cultures containing CTLL-2 were pulsed with 1 μCi ^{3}H-thymidine (specific activity = 2.0 Ci/mmole; New England Nuclear, Wilmington, DE) 6 hr before harvest, while those containing U937 and HUT cells received a 24 hr pulse. Cultures were terminated by automated harvesting and the amounts of incorporated ^{3}H-thymidine were determined with the use of a liquid scintillation counter. Results were expressed as mean cpm $\pm$ 1 standard deviation.

The staining of HUT cells for the expression of the IL2R was performed as described in Chapter 3 for PBMC and the results were expressed as the percentage of $IL2R^+$ cells and the mean channel number

of the logarithm of the fluorescence intensities (MFCh) distributed over 256 channels.

The data in Table 1 show that T. cruzi was able to decrease the growth of CTLL-2 and U937 cells. Proliferation of CTLL-2, an IL2-dependent murine T cell line, was reduced by the presence of 1 X 10^7 T. cruzi/ml after 24 hr, while 2.5 X 10^6 T. cruzi/ml were effective at 48 hr. Growth of the human myelocytic U937 cells was suppressed by 5 X 10^6 T. cruzi/ml at 48 hr (Table 1), while 1 X 10^7 parasites/ml had an effect after only 24 hr (data not shown). Since the U937 cells and the parasites were separated by a 0.45-μm-pore-size filter, the noted decrease can not be a result of infection of this monocyte-like cell line. It should be noted that the suppressive ratio of parasites to cells was 125:1 and 500:1 for CTLL-2 at 48 and 24 hr, respectively, and 50:1 and 100:1 for the U937 cells. This is a much higher ratio than is required to inhibit the mitogen-induced proliferation of mouse spleen cells (1:1; Chapter 2) or human PBMC (4:1; Chapter 1). In contrast to the results obtained with the CTLL-2 and U937 cell lines (Table 1) or normal human peripheral blood mononuclear cells (Chapters 3 and 4), T. cruzi (5 X 10^6 parasites/ml) was not able to affect the growth or the expression of the IL2R by HUT 102B2 cells after 48 hrs of co-culture (Table 2). Similar results were seen when the parasite concentration was increased to 1 X 10^7 T. cruzi/ml (data not shown). Higher concentrations of T. cruzi were not tested due to the rapid acidification of the culture medium under these conditions (unpublished observation).

The failure of T. cruzi to inhibit growth or IL2R expression of

Table 1. T. cruzi Decreases the Growth of CTLL-2 and U937 Cell Lines[a]

		Incorporation of ^{3}H-thymidine at:	
Cell line	T. cruzi (x10^6)	24 hr	48 hr
CTLL-2	none	13.0 ± 0.1	44.4 ± 0.6
	1.25	14.2 ± 0.6	44.5 ± 3.3
	2.5	15.3 ± 0.5	27.6 ± 0.1[b]
	5.0	11.9 ± 0.4	6.3 ± 0.6[b]
	10.0	7.4 ± 0.2[b]	3.1 ± 0.2[b]
U937	none	ND[c]	70.9 ± 11.1
	1.25	ND	78.3 ± 4.1
	2.5	ND	70.1 ± 3.1
	5.0	ND	44.5 ± 6.3[b]
	10.0	ND	24.8 ± 3.7[b]

[a] The results with CTLL-2 and U937 cells were obtained in separate experiments, each of which was repeated on three occassions.

[b] $p \leq 0.05$, for the reductions in cpm with respect to the corresponding control which lacked T. cruzi, as calculated by Student's "t" test.

[c] Not determined.

Table 2. T. cruzi does not Affect the Ability of HUT 102B2 Cells to Proliferate or Express IL2R[a]

Material	^{3}H-thymidine incorporation (cpm x 10^{-3})	%IL2R+ cells	log MFCh
HUT	14.6 ± 0.5	66.0	120
HUT+T. cruzi	16.3 ± 0.1	69.0	117

[a] The proliferative response and the expression of the IL2R were tested separately in forty-eight hr cultures of HUT 102B2 cells incubated with or without 5 X 10^6 T. cruzi/ml. These results are representative of two separate repeat experiments.

HUT 102B2 cells may lie in the mechanism of their transformation. This cell line is infected with and was immortalized by HTLV-1 (4,5). The initial stages of this immortalization appear to utilize an autocrine mechanism of growth, involving the constitutive production of IL2 and the IL2R, which is inhibitable by antibodies to the IL2R (5,6). Later events lead to the loss of IL2-dependence and lack of IL2 production by some of the HTLV-1-infected lines (reviewed in 7). The mechanism of the enhanced transcription of IL2 and IL2R mRNA appears to result from the interaction of the transactivator gene product (tat-I) of HTLV-1 with the promoters of these cellular genes (8,9) which bear sequence homology with the regulatory regions of HTLV-1 (10). In the case of the IL2R gene, the promoter engaged by tat-1 differs from that used in the normal activation process (8). The differences between the growth of normal activated peripheral blood mononuclear cells and HTLV-1-infected cell lines (loss of IL2-dependent growth, constitutive expression of the IL2R, and the use of a different IL2R promoter) may explain the ability of T. cruzi to suppress growth and IL2R expression in the former but not the latter case.

In summary, at high parasite to cell ratios T. cruzi is able to suppress the growth of a long-term IL2-dependent line and a monocyte-like cell line, but not HTLV-1-infected HUT 102B2 cells under the conditions tested. The latter finding also suggests that T. cruzi-induced growth-inhibition of immortalized cell lines is not merely the result of nutrient consumption.

REFERENCES

1. Denhardt, D. T., D. R. Edwards, and C. L. J. Parfett. 1986. Gene expression during the mamalian cell cycle. Biochimica Biophysica Acta 865:83.

2. Wedner, H. J. 1984. Biochemical events associated with lymphocyte activation. Survey of Immunologic Research 3:295.

3. Beltz, L. A., and F. Kierszenbaum. 1987. Suppression of human lymphocyte responses by Trypanosoma cruzi. Immunology 60:309.

4. Poiesz, B. J., F. W. Ruscetti, A. F. Gazdar, P. A. Bunn, J. D. Minna, and R. C. Gallo. 1980. Detection and isolation of type C retrovirus particles from fresh and cultured lymphocytes of a patient with cutaneous T-cell lymphoma. Proc. Natl. Acad. Sci. USA 77:7415.

5. Gazzolo, L., and M. D. Dodon. 1987. Direct activation of resting T lymphocytes by human T-lymphotropic virus type I. Nature 326:714.

6. Gootenberg, J. E., F. W. Ruscetti, J. W. Mier, A. Gadzar, and R. C. Gallo. 1981. Human cutaneous T cell lymphoma and leukemia cell lines produce and respond to T cell growth factor. J. Exp. Med. 154:1403.

7. Greene, W. C., W. J. Leonard, J. M. Depper, D. L. Nelson, and T. A. Waldmann. 1986. The human interleukin-2 receptor: normal and abnormal expression in T cells and in leukemias induced by the human T-lymphotropic retroviruses. Annals Internal Med. 105:560.

8. Cross, S. L., M. B. Feinberg, J. B. Wolf, N. J. Holbrook, F. Wong Staal, and W. J. Leonard. 1987. Regulation of the human interleukin-2 receptor α chain promoter: activation of a nonfunctional promoter by the transactivator gene of HTLV-1. Cell 49:47.

9. Siekivitz, M., M. B. Feinberg, N. Holbrook, F. Wong-Staal, and W.C. Greene. 1987. Activation of interleukin 2 and interleukin 2 receptor (Tac) promoter expression by the transactivator (tat) gene product of human T-cell leukemia virus, type 1. Proc. Natl. Acad. Sci. USA 84:5389.

10. Fujita, T., H. Shibuya, T. Ohashi, K. Yamanishi, and T. Taniguchi. 1986. Regulation of human interleukin-2 gene: functional DNA sequences in the 5' flanking region for the gene expression in activated T lymphocytes. Cell 46:401.

SUMMARY AND CONCLUSIONS

A state of suppressed immune reactivity occurs during the early stages of infection with Trypanosoma cruzi. Both cellular and humoral arms of the immune system, however, are functional during the infection's later stages and play a vital role in host defense. It may thus be hypothesized that the initial state of immunosuppression enables T. cruzi to establish itself intracellularly and that overcoming this phenomenon may allow clearance of the parasite by the host's immune system before the onset of pathology. It was our goal, therefore, to characterize the immune alterations which T. cruzi induces in human T lymphocytes with the ultimate goal of developing means to abrogate these events and the subsequent occurance of disease.

Prior to this work, knowlege of the extent of the parasite-induced immunosuppressive events in human lymphocytes was extremely limited. It was shown herein that T. cruzi was able to suppress the proliferation of human T cells following activation by either the T cell receptor or the CD2 antigen-independent stimulatory pathways and that the ability of the parasite to inhibit the expression of the interleukin 2 receptor played a key role in this process.

The addition of T. cruzi trypomastigotes or epimastigotes to cultures of normal human peripheral blood mononuclear cells (PBMC) reduced the ability of the latter to proliferate in response to a variety of mitogenic lectins in a parasite-dose-dependent manner and over a wide range of mitogen concentrations. This reduction was not

due to consumption of essential nutrients or to a lowering of mitogen concentrations to suboptimal levels by T. cruzi nor to a loss of PBMC viability after co-culture with the parasite. T. cruzi was also able to suppress PBMC proliferative responses after stimulation by anti-CD3, a monoclonal antibody directed against the T cell receptor complex, and anti-$T11_2$ and anti-$T11_3$ antibodies which trigger T cells via the CD2 activation pathway. The presence of monocytes was not required for the decrease in PBMC responsiveness while parasite viabilty was necessary. T. cruzi additionally inhibited the growth of several but not all immortalized cell lines tested.

T. cruzi was able to exert its suppressive effects when separated from the cells by a Millipore filter insert, demonstrating that a soluble factor released by the parasite was involved in the suppressive process. T cell responsiveness showed a partial recovery within 24 hr after removal of the insert containing T. cruzi, demonstrating the reversibility of the immune alterations and the lability of the suppressive factor.

Maximal suppression was noted when T. cruzi was added to cultures within the first 24 hr of stimulation and decreased as the time of parasite addition was prolonged. Thus T. cruzi appeared to affect an early stage of lymphocyte activation. Interleukins (IL) 1 and 2 are produced by stimulated monocytes and T cells, respectively, and are required early during the T cell growth cycle. Under conditions of optimal stimulation, T. cruzi was unable to reduce the ability of human PBMC to produce or secrete either of these molecules or interferon-γ while mouse spleen cells were deficient in the production of both IL2

and interferon-γ after co-culture with the parasite. In keeping with these results, IL2 was able to restore the mitogen-induced proliferative responses of suppressed mouse but not human lymphocytes. Thus, there are notable differences in the process of suppression of mouse spleen cells and human PBMC. These results indicate that caution must be exerted when extrapolating findings obtained with the murine model system to the human disease.

The inability of human PBMC to respond to endogenous or exogenous IL2 correlates with the ability of T. cruzi to inhibit the expression of the IL2 receptor (IL2R) on T cells. Both the number of cells bearing IL2R and the receptor density were decreased by T. cruzi in a manner which was dependent upon the parasite concentration. This decrease was observed within 12 hr of stimulation and persisted until at least 60 hr. Both the low and the high affinity forms of the receptor were affected.

Expression of the transferrin receptor, a molecule required for lymphoproliferation as well as a late activation marker, was also inhibited by T. cruzi while the levels of early activation antigen 1, the earliest reported activation marker of T cells, were unaffected by the parasite during the initial 6 to 24 hr of stimulation. T. cruzi additionally suppressed the up-regulation of the surface expression of the $T11_2$ epitope of CD2 as well the exposure of the $T11_3$ epitope of this molecule which occurs during activation. Thus, T. cruzi is selective in its inhibition of human T cell activation events and this specificity may provide the key in overcoming the parasite-induced suppression.

The event which appears to be of the greatest importance is the decreased expression of the IL2R since triggering by this molecule allows progression from the early to the late G_1 stage of the cell cycle and regulates many of the subsequent events of T cell activation. Additionally, this is the earliest process reported to be altered by T. cruzi. Future work in this area might address the following questions:

1. Does T. cruzi cause an increase in the levels of the soluble IL2R as is the case in AIDS and certain forms of cancer?

2. Is the expression of the membrane form of the IL2R on activated B cells and monocytes also affected?

3. Are the levels of IL2R mRNA decreased by T. cruzi, and if so, is this an expression of decreased transcription or of decreased mRNA stability?

4. Is the expression of cellular oncogenes altered by T. cruzi?

5. How may the stability of the parasite-induced suppressive factor be increased so as to allow its purification and characterization?

The answers to these questions will allow a greater understanding of the process of immunosuppression by T. cruzi and may be of value in the study of immune alterations caused by other pathogens, in particular, the human immunodeficiency virus.

MICHIGAN STATE UNIV. LIBRARIES
31293000567911