COMPUTER ANALYSIS OF STOMACH CONTENT, LENGTH-WEIGHT RELATIONSHIP AND GROWTH OF FISH POPULATIONS

Thesis for the Degree of Ph. D.

MICHIGAN STATE UNIVERSITY

Ross B. J. Macnab

1963

THESIS

MICHIGAN STATE UNIVERSITY LIBRARIES
3 1293 01591 4116

This is to certify that the

thesis entitled

COMPUTER ANALYSIS OF STOMACH CONTENT,
LENGTH-WEIGHT RELATIONSHIP
AND GROWTH OF FISH POPULATIONS

presented by

Ross B. J. Macnab

has been accepted towards fulfillment
of the requirements for

Ph.D. degree in Fisheries and Wildlife

Peter J. Tack for E. W. Roelofs
Major professor

Date July 29, 1963

O-169

LIBRARY
Michigan State
University

ABSTRACT

COMPUTER ANALYSIS OF STOMACH CONTENT, LENGTH-WEIGHT RELATIONSHIP AND GROWTH OF FISH POPULATIONS

by Ross B. J. Macnab

Most scientific studies of fish population dynamics have taken place in recent years. This new approach to classical biology in addition to requiring a certain competence in mathematics, has also burdened the research worker with great masses of manual calculations.

Many of the standard computations used in fish population studies are directly adaptable to electronic computers. It is the purpose of this study to present certain areas in which computers may greatly assist the student of fish populations, and to develop the necessary computer programs to carry out these computations. The programs are developed in such a way that the fisheries biologist may have the calculations performed, without any knowledge of computer science. Complete instructions, from tabulation of raw data to computer console operating instructions are presented.

The calculations involved in the analysis of life history studies are particularly well suited to treatment with electronic computers. Specifically, in the present study, stomach content, age and growth and length-weight relationship are the areas developed.

The list of tables of analysis computed by the computer programs is as follows:

1. Percentage of the Total Number of Stomachs Containing Each of Four Food Items and the Percentage of Stomachs Which Were Empty.

2. Dominant Food Item in Stomachs, Expressed As a Percentage of the Number of Stomachs Which Contained Food.

3. Dominant Food Item in Stomachs, Expressed As a Percentage of the Number of Stomachs Which Contained Food, When Sorted into Ten Length Intervals.

4. Specimen Number, Sex, Age, Total Length, Standard Length, Fork Length, Weight, Logarithms of Length and Weight, Condition Factors and Unmagnified Scale Radius of Each Fish in the Sample.

5. Log Weight vs. Log Length, Regression and Correlation Analysis.

6. Length vs. Scale Radius, Regression and Correlation Analysis.

7. Length vs. Length, Regression and Correlation Analysis.

8. Mean Condition Factors Separated Into Ten Length Intervals As Well As the Length Frequency Distribution of the Sample.

9. Mean Condition Factors By Age As Well As the Age Frequency Distribution of the Sample.

10. Specimen Number, Sex, Age, Length, Scale Magnification and Calculated Lengths at Previous Ages, of Each Fish in the Sample.

11. Mean Calculated Lengths at Successive Annuli For All Fish in the Sample.

12. Mean Calculated Lengths at Successive Annuli For Males.

13. Mean Calculated Lengths at Successive Annuli For Females.

14. Mean Calculated Lengths at Successive Annuli For Unsexed Fish.

In tables of analysis which involve body length, a choice of total, standard or fork length is available. If all three length measures are included in the input data, three variations of most of the fourteen basic tables of analysis are available. Most of the tables present the analysis of the entire sample as well as for each of the three

sex classifications (male, female and unsexed) separately. Three options of length interval size are available.

The computer used in the analyses is the IBM 1401 with a minimum of 8000 locations of storage and two magnetic tape units. Certain other special features are required. The analyses may also be performed using IBM 1410 or 1460 computers.

Copies of the programs developed are available from the author, c/o The Department of Fisheries and Wildlife, Michigan State University.

Copyright by
ROSS BERNARD JAMES MACNAB
1964

COMPUTER ANALYSIS OF STOMACH CONTENT, LENGTH-WEIGHT RELATIONSHIP AND GROWTH OF FISH POPULATIONS

By

Ross B. J. Macnab

A THESIS

Submitted to
Michigan State University
in partial fulfillment of the requirements
for the degree of

DOCTOR OF PHILOSOPHY

Department of Fisheries and Wildlife

1963

329912
5/28/64

ACKNOWLEDGMENTS

Many individuals have assisted extensively in the development of this study. Unfortunately space dictates that indebtedness can be expressed to only a few.

The author wishes to express his sincere appreciation to Mr. Ross L. Parsons, Branch Operations Manager, and Mr. Ivan P. Phelan, Controller, of Avon Products of Canada, Ltd. who arranged that all computer testing be done at the Pointe Claire, Quebec, laboratory. Without this assistance this study would not have been possible. It is particularly notable that this aid was given by a corporation without any personal interest in the outcome of the study.

Mr. C. Brodeur of R. L. Crain of Canada, Ltd. arranged for the supply of all computer paper which was used for the final computer runs and which appears in this volume. For this both he and his firm are sincerely thanked.

Dr. E. W. Roelofs, committee chairman and Dr. P. Tack, Chairman of the Department of Fisheries and Wildlife at Michigan State University are both to be thanked for their patience and assistance during the preparation of this study as well as generally during the author's doctoral program.

Mr. Maxwell DeKoven of International Business Machines (Canada) made valuable suggestions on technical matters in certain areas of the computer programs developed.

Sincere gratitude must be extended to Dr. H. J. Montoye of the School of Public Health, University of Michigan, who originally stimulated the author's interest in research.

For continued encouragement during the formative years the author wishes to express deep thanks to his parents. Their unselfish dedication indirectly enabled the study to become a reality.

Last, but by no means least, sincere gratitude is extended to a most helpful and encouraging wife, Sherry, and to daughters Carol and Sandra who received far less than their share of attention during the preparation of this work. The assistance of the author's wife, from typing to proof-reading, is too extensive to state in detail.

TABLE OF CONTENTS

Chapter		Page
I.	GENERAL INTRODUCTION TO THE STUDY	1
	The Problem	4
	The Computer	7
	General Procedure	11
	Definitions of Terms Used	12
	Related Studies	13
II.	GENERAL DISCUSSION OF INPUT AND OUTPUT	17
	Input	17
	Output	24
III.	TABULATION AND KEY PUNCHING OF INPUT DATA . . .	39
	Tabulation of Input Data	39
	Key Punching of Input Data	43
IV.	COMPUTER ANALYSIS OF INPUT DATA	44
	Basic Computer Requirements	44
	Console Operating Instructions	45
V.	MISCELLANEOUS INFORMATION AND SUMMARY	54
	Miscellaneous Information	54
	Summary	56
	LITERATURE CITED	59

LIST OF TABLES

Table		Page
I.	Sense switches for Program 1	46
II.	Sense switches for Program 2	47
III.	Programs halts	51
IV.	Running time for Programs 1 and 2	57

LIST OF FIGURES

Figure		Page
1.	IBM 1401 Installation	9
2.	Tabulation Sheet	40
3.	Computer Flow Charts	50

LIST OF APPENDICES

Appendix		Page
A.	Output Tables	62
B.	Block Diagrams of Programs 1 and 2	119
C.	Programs 1 and 2	128

CHAPTER I

GENERAL INTRODUCTION TO THE STUDY

Most scientific studies of fish population dynamics have taken place in recent years. This new approach to classical biology, in addition to requiring a certain competence in mathematics, has also burdened the research worker with great masses of manual calculations.

The investigator, interested in the biological statistics of fish populations, must spend many hours of tedious manual, or at the best semi-automatic calculations, for each hour of creative investigation. The result has been that many data fail to reach publication for many years, because the research worker has been unable to complete the necessary calculations.

Workers, in all fields of research, realize the relatively small percentage of their busy schedules they are able to devote to productive research. So much time must be devoted to administrative tasks, to lengthy library searches, to writing and re-writing research papers as well as to complicated statistical computations. While one must not subject

scientific investigation to the rigid efficiency standards of a factory production line, one must nevertheless strive to free the research worker, as much as possible, from his non-creative burdens.

The development of high-speed electronic computers has revolutionized data processing in many areas. Commercial applications have become so widely developed and publicized that they hardly need mention. Sales analyses, insurance tables, scheduling of reservations by airlines, capital investment, inventory control, invoicing, to mention a few, are all areas in which computers have drastically reduced the time required for former procedures, and made possible the introduction of new techniques. The field of operations research, developed during the Second World War, has rapidly progressed with the aid of electronic computers. Linear programming has led to many techniques of "least costing", which involve such lengthy calculations that they were impractical, to suddenly become widely used. Simulation of plant operations by computers is resulting in more efficient operation of plant facilities. In the field of forestry, inventories of woodlands are being made to plan present and future operations. Engineering has employed computers to assist in the development of new dams and in the study of electrical circuits.

An entirely new branch of science has evolved during recent years, dealing with control and communication in living organisms and machines. This new area, Cybernetics, has been investigated quite extensively, particularly by Wiener (1961) and his associates.

Many of the standard computations used in fish population studies lend themselves directly to adaptation to electronic computers. It is the purpose of this study to present certain areas in which computers may greatly assist the student of fish populations, and to develop the necessary computer programs to carry out these computations. The programs will be developed in such a way that the fisheries biologist may have the calculations performed, without any knowledge of computer science.

The calculations involved in the analysis of life history studies, are particularly well suited to treatment with electronic computers. Specifically, for the present study, stomach content, age and growth, and length-weight relationship, were the areas chosen for development. These analyses are, for the most part, fairly standard in nature, being employed by fisheries workers throught the world. The calculations involved are generally tedious, requiring many hours, even with the aid of desk calculating machines.

The Problem

Objectives of the Study

The objectives of this study are (1) to develop a coding system to enable the stomach content, age and growth and length-weight relationship, raw data, to be transferred into punched-card form; (2) to develop a series of electronic computer programs to accomplish the analysis of the raw data, as well as to print the results in tabular form; (3) to present a series of logical steps which the fisheries worker must follow, in the preparation of the raw data in punched-card form; and (4) to present the necessary computer console operating instructions, for the programs, such that a computer operator could perform the actual computer analysis for the fisheries worker.

While it was not the purpose of this study to contribute directly to the literature of fish populations, it is hoped that the system of analysis presented will greatly increase the efficiency of other workers. Similarly, it was not the purpose of this study to present a system of analysis which would be an end in itself. Rather, it is hoped that the present study will stimulate further refinements of data processing in the area chosen, as well as new developments in other areas.

Limitations of the Study

A basic aim of the study was the development of a system of analysis which would be sufficiently sophistocated to meet the precise needs of research workers, yet simple enough to encourage its use. The resulting compromise may lack certain details required by some investigators. However, it is hoped that this limitation will serve to stimulate the development of more specialized programs to meet these specific needs. Perhaps an example might be in order. For the sake of simplicity, certain advantages appeared for having all raw data condensed onto one punched card per fish. This presented restrictions to the quantity of raw data possible. For stomach content analysis, space dictated that only four different food items or groups could be included, while many studies require a dozen or more items. Future programs could be developed in which one punched card per fish could be devoted solely to stomach content raw data. This would allow for inclusion of as many as twenty-five different food items.

The attempt was made to create a sufficiently generalized system of analysis to insure its adaptability to varied needs. This generalization was obtained at the expense of certain features possible in computer programs designed for one specific research project. Certain of the tables of analysis involve length-frequency distributions. The

compromise was ten intervals, with three choices of interval size. A program developed for one particular group of data could be planned in such a way as to include more than ten intervals with a specific pre-chosen interval size.

Still another limitation is the possible inclusion of undetected errors. In the development of computer programs of this type there exist certain advantages to constructing a hypothetical sample for testing purposes. This allows for the inclusion of as many sets of conditions as can be envisioned. Nevertheless, the possibility still exists that a set of conditions, in some particular sample of fish, has not been encountered in the development of the present programs. In such an event, it is hoped that the author will be notified immediately, so that the necessary adjustments can be made.

Test Sample

The sample used in the testing and demonstrating of the computer programs was hypothetical. No significance should be attached to the actual results presented. The sample was constructed to include as many sets of conditions as possible. Extreme values were included in the test sample to allow for the eventuality that they might exist in certain fish populations. Scale radii, for example, were made greater than would be expected in normal samples, but this was

intentional. Similarly, condition factors in many cases are well below what might be expected in nature. However, the advantages of a hypothetical sample appeared to far outweigh the disadvantages.

The Computer

The computer selected for the analyses was the IBM 1401 Data Processing System. However, either the IBM 1410 or the IBM 1460 may also be used. Designed and manufactured by the International Business Machines Corporation, the 1401 is a solid state (transistorized) digital computer readily available in IBM Data Centers or Service Bureaus across North America as well as in most foreign countries. Because of the complexity of this and other computers, they are well beyond the financial limits of fishery departments of universities or state or provincial fisheries and wildlife departments. However, the introduction of the "Data Center" or "Service Bureau" concept has meant that machine time of any short duration may be rented, and trained operators provided. Thus, a fisheries research worker, after tabulating the data in a prescribed manner could have the data key-punched and processed in an extremely short time at a reasonable expense. This was a key factor in the selection of the IBM 1401.

The 1401 system provides high-speed input output and arithmetic and logical ability, with the advantages of stored-program techniques. Both actual and symbolic language programming are possible. The computer is sequential and has the variable word length feature. It is available with magnetic tape units for additional storage capacity.

A typical 1401 installation is shown in Figure 1. From left to right may be seen two magnetic tape units, the 1402 Card Read-Punch, the 1401 Processing Unit with a 1406 Storage Unit, and the 1403 Printer. The 1401 Data Processing System is comprised of all of the above units.

The 1401 Processing Unit contains the core storage and circuitry that perform the machine logic. Storage capacity is available in 1400, 2000, 4000, 8000, 12,000 or 16,000 alphamerical characters of 8-bit core storage. The eight bits consist of six bits for binary coded decimals, a check bit and an eighth bit for field definition. The programs developed in this study require a minimum storage capacity of 8000.

Simultaneous punched-card input and output is provided by the 1402 Card Read-Punch. This unit has two card feeds. The read section has a maximum reading speed of 800 cards per minute. Actual speed is governed by the amount of processing between read commands. The punch section has a maximum

Figure 1 IBM 1401 Installation

punching speed of 250 cards per minute. Actual punch speed is again governed by the amount of processing between punch commands.

Another output medium for the 1401 Data Processing System is the 1403 Printer. Printing speeds of up to 600 lines per minute are possible. The standard printing capacity, per line, is 100 positions with an additional 32 positions available as a special feature. Each position can print 48 different characters. These include 26 alphabetic, 10 numerical and 12 special characters.

Magnetic core storage is used in the 1401 Data Processing System. All data in core storage are instantly available and each position of storage is individually addressable. The physical make-up of each core storage location makes it possible for arithmetic operations to be performed directly in the storage area.

Magnetic tape is made of a plastic material, coated with a metallic oxide. It can be magnetized in tiny spots in such a way that patterns of these spots are codes for digits, and alphabetic and special characters. Thus, magnetic tape may be used as data storage, and this data may be part of input or output.

General Procedure

The investigator wishing to make use of the computer programs developed in this study, must follow a prescribed set of instructions. These instructions will be dealt with in detail in the chapters that follow. Briefly, however, the procedure is as follows.

Tabulation of Data

A special tabulation form was developed such that the raw data, when measured, could be recorded in a prescribed manner. This tabulation sheet may then be taken directly to an experienced key-puncher, who can directly transcribe the raw data into punched-card form.

Analysis of Data

The computer programs developed in this study, were reproduced in condensed form into decks of cards. Copies of these, may be obtained through the author. These program decks must then be taken to the IBM Data Center or Service Bureau where the analysis is to take place. Instructions are provided, for the computer operator, to complete the analysis.

Definitions of Terms Used

Computer

The term computer has many different meanings. In its most liberal definition it may be referred to as any instrument used for computations. However, of late, the term has taken on a more restricted meaning. For this study, computer is taken to refer to an electronic devise used for computations, and governed by a set of instructions called "a program." This program is stored within the computer. Electronic calculators, using wired panels, would not be included.

Computer Program

A particular set of instructions, designed to solve a specific problem, is known as a program. When these instructions are stored internally, within the computer, it is called a stored-program. The instructions, developed in this study, were key-punched into cards and enter the computer through this medium.

Computer Input

The raw data fed to the computer, prior to analysis, are referred to as the computer input. For this study input is in the form of punched-cards. In one of the programs, images of the punched-cards are placed on magnetic tape.

Later, in the same program, this magnetic tape becomes a source of input.

Computer Output

The tables of analysis, produced by the computer are called the output. These are produced by the high speed printer of the 1401 Data Processing System.

Logarithm

Logarithms are calculated and analyzed in several of the tables of analysis developed in this study. In all instances these logarithms are to the base 10.

Related Studies

Electronic computer processing of data in fisheries or wildlife investigations has not been widespread. Certain developments in this area may have occurred without having reached publication. Others which have been published make use of "unit record" electronic calculating, sorting and tabulating machines rather than high speed electronic computers. However, a brief discussion of techniques developed in both fisheries and wildlife is of interest.

Leeper et al. (1957) published a paper in which certain uses for punched-card methods, in the tabulation and

analysis of fishery research data, are indicated. Both advantages and disadvantages of this technique of data processing are cited.

In a somewhat similar review, Lambou (1959) described the use of machine methods in processing fishery data. The general area of punched card techniques is discussed. Basic principles, advantages and disadvantages, and arrangements for securing machine time are considered.

Mansueti (1959) also commented on the need for critical fishery research planning and electronic data processing. In this analysis the author stresses the importance of good design in research planning as well as automatic processing of data. An extensive listing of applications developed in fisheries and wildlife data processing is included. The advantages and disadvantages of cooperative electronic data processing programs are also emphasized. Some long term effects of machine methods on fishery science are cited.

Lambou (1959) has contributed toward a bibliography on use of machine methods in processing fishery data. Most of the references cited do not deal with fishery problems directly but describe methods which might be applied to fishery problems or deal with automatic data processing in a general manner.

A simplified creel census program for punch-card tabulation has also been detailed by Lambou (1959). The machines employed are "unit record" in nature. However, in personal correspondence Lambou has indicated the development of as yet unpublished computer programs to process length-weight data.

The California Bureau of Marine Fisheries was one of the first natural resource organizations to apply machine methods to fishery data. IBM equipment was installed in 1931 to aid in processing the commercial fish catch of the state. Since 1931, the system has been elaborated and expanded. Tomlinson and Abramson (1961) of the California Department of Fish and Game, have employed an IBM 7090 computer in fitting a von Bertalanffy Growth Curve by "least squares."

El-Zarka (1959), according to Mansueti (1959), programmed studies of Yellow Perch populations in Lake Huron so that multiple correlation and regression analyses of many years of biological environmental data were possible.

The U.S. Fish and Wildlife Service has also been active in processing commercial catch records using punched cards. A Maryland general canvas has been conducted by this agency cooperatively with the Maryland State Department of Tidewater Fisheries. This work has been reported in mimeographed form by Dumont (1959). Other Maryland commercial

fisheries statistical techniques have been described by Hammer et al. (1958).

Eberhardt and Hayne (1958) describe a method of estimating duplication in licensing. Benson (1957) calls attention to a method of mechanically analyzing hunters' reports in Nova Scotia. In addition, Schultz (1954) outlines the use of punched card techniques in wildlife surveys of Tennessee.

The National Oceanographic Data Center with headquarters in Washington D.C., has been using and is increasing its use of electronic computers in processing oceanographic data. This institution has developed computer programs to prepare cruise data, compute and list cruise data and to prepare geographical card and magnetic tape files. This work is analyzed using a Burroughs 205 computer with Cardatron (including one punch card input; one punch card output; and one 407 line printer output) and magnetic tape facilities (3 tape units). In addition, this center has been involved in the development of biological information (data) holding-recall systems.

CHAPTER II

GENERAL DISCUSSION OF INPUT AND OUTPUT

It is of utmost importance that the investigator, wishing to make use of the system of analysis developed in this study, have a thorough understanding of the raw data required as well as the tables of analysis developed by the computer. These are referred to, in computer terminology, as the input and output. The present chapter discusses in detail the items of raw data included and the various tables of analysis available to the investigator. The input, after being tabulated by the fisheries worker is key-punched into punched-card form. Each fish in the sample is represented by one punched-card.

Input

Experiment Number

This indication allows the investigator to identify the particular sample of fish being processed. The number is key-punched into the deck of punched-cards which are the raw data. The researcher may thus have a permanent record of the

sample of fish which the deck of cards represent. The range of experiment numbers available is 001-999. The experiment number is not printed in any of the tables of output.

Specimen Number

An identification for each fish in the sample is provided by the specimen number. The range of specimen numbers is 0001-9999. This limits the maximum number of fish in any given sample to 9999. In tables of output, where calculations are printed in detail for each individual fish, the specimen number is included.

Age

The age of each individual fish is included in the raw data input. The range of ages possible in this study is 01-12. Age is included, in tables of output, where calculations are printed in detail for each individual fish. In certain output tables, summarizing the data of the sample, the fish are sorted by age prior to analysis.

Sex

The raw data input includes the sex of each individual fish. Fish within the sample may be classified as male, female or unsexed. This latter classification is included to

allow for immature fish, or other instances where sexing is impossible. Sex is included in tables of output which are printed in detail. In tables which summarize the data of the sample, analysis is generally performed for the entire sample, for males only, females only and unsexed only. The coding system used for sex is 0 for males, 1 for females and blank for unsexed fish.

Units

The usual unit of measure for body length is millimeter and for body weight is the gram. However, after consulting "Total length" below, a decision may be made to change the units, for the entire sample, to the centimeter and the dekagram. The coding system for units is blank for the millimeter-gram and 1 for the centimeter-dekagram.

Total Length

The total length of each fish may be recorded. Provision is also made for the use of standard length and fork length. All three length measurements may be recorded in any given sample of fish. However, one of the three must be designated as the "basic" length measurement. Information on designating the "basic" length measurement is given in Chapter IV. This "basic" length measurement is used in certain tables

of analysis where calculations are based on only one of the three length measurements. At least one of the three length measurements must be included in the raw data. The normal range of lengths is 001-999 expressed in millimeters. If fish within the sample exceed 999 millimeters in length, the range, for the entire sample, may be altered to 001-999 expressed in centimeters. However, if the decision is made to use centimeters as the unit for one of the three length measurements, it must also be used for the other two if they are recorded. Similarly if centimeters are used for length measure, the unit of body weight must be the dekagram.

Standard Length

Opportunity for recording standard length is provided. The discussion above, under "Total length," is applicable to this item of raw data.

Fork Length

Fork length may also be included as part of the input data. The discussion, under "Total length," is again valid.

Weight

The weight of the fish expressed in grams, must be included in the input data. The range of weights possible is

0001-9999 grams. If individual fish in the sample exceed 9999 grams, the unit of weight measure for the entire sample, may be changed to dekagrams (10 grams). However, if this decision is made the unit of length measure must be the centimeter.

Scale Radius at Capture

The scale radius at capture must form a part of the input data. The unit of measure is the millimeter. If magnification is used to accomplish the measurement, reduction to an unmagnified value is performed automatically by the computer. For example, if the scale is magnified 47 times and a reading of 141 millimeters is recorded, the computer will calculate the unmagnified value to be 3.00 millimeters. This variable magnification feature is discussed at length below. The range of the scale radius, in its unreduced or magnified form, is 001-999 millimeters.

Scale Radius at Previous Ages

Provision is made for the inclusion of scale radii at previous annuli, up to a maximum of 12 years. These data must comprise part of the computer input. The discussion above, under scale radius, is also applicable for these data. It should be emphasized that the maximum possible age is

twelve. The range for each of the radii is as above, 001-999 millimeters.

Scale Magnification

Scale magnification is intimately connected with both the scale radius at capture and the scale radii at previous ages. Its inclusion allows for a variable amount of magnification, from fish to fish, for scale measuring. However, in any given fish the amount of magnification must remain constant for all scale measurements. The range of magnification possible is 01-99. No magnification would be indicated by 01, while 99 would indicate a magnification of 99 times. This allows all scale radii data to be reduced automatically, to unmagnified form, by the computer. All scale radii data are then computed and printed in output tables of analysis, in unmagnified form.

Percent of Each of Four Food Items in Stomach

The remaining raw data are those concerned with stomach content analysis. The contents of the stomach may be subdivided into four food items or groups. The estimated percent of the total stomach content, comprised by each of the four food items is included in the input data. The four food items are designated A, B, C, and D. Item A may be

pre-selected by the fisheries worker to represent any one food item or group, such as crustacea, insects or forage fish. The range of values possible for "percent of food item A in stomach" is 000-100. Thus 000 would indicate that food item A did not occur in the stomach. Similarly 070 would indicate that food item A made up 70% of the total stomach content. Should the entire stomach content be made up of food item A, the value 100 would be given in the raw data input. If 000 is given as the value for each of the four food items, it indicates an empty stomach. Items B, C and D represent the other food items or groups. Two of the tables of stomach content analysis, indicate the dominant food item in the stomachs of groups of fish in the sample. These groups are sorted by sex and by body length intervals. The computer in its analysis selects the dominant food item in each stomach, that is, the largest percentage value from the four food groups. Should two or more of the four food items share this distinction the computer will consider the dominant item to be the one further in the alphabet. Thus, if the entire stomach content is indicated to be made up of 50% food item A and 50% food item C the computer will consider item C to be the dominant food item in the stomach. Therefore, the investigator should attempt to make a decision as to which comprises the greatest percentage of the entire stomach

content. In the example just cited the values 49% food item A and 51% food item C, or 51% food item A and 49% food item C, should be given as input. Otherwise, the possibility exists of bias in the output data.

Summary of Input Data

The preceding description of input data is meant to familiarize the fisheries worker with the type of raw data analyzed by the computer programs developed in this study. More concise details of methods of tabulation, and instructions to be followed in having the data transferred into punched-card form, are given in Chapter III.

Output

Introduction

The analysis of the input data was divided into two phases. The first phase involves the calculations necessary for the analysis of stomach content data while the second performs the remaining analyses. One computer program was written for each of the phases. Program 1 reads in the punched card raw data input deck (1 per fish), performs the necessary calculations and prints output Tables 1, 2 and 3. Program 2, in a separate operation, rereads the input deck, performs the necessary calculations and prints output Tables

4-14. Details of operating instructions are given in Chapter IV. Samples of output Tables 1-14, and variations of these tables are given in Appendix A.

Table 1.--Percentage of the Total Number of Stomachs Containing Each of Four Food Items and the Percentage of Stomachs Which Were Empty

The first of a series of three tables of stomach content analysis is given in Table 1, which indicates: (1) the percentage of the total number of stomachs which contained each of the four food items; (2) the percentage of stomachs which were empty; (3) the number of fish which contained each of the four food items; (4) the number of fish with empty stomachs; and (5) the total number of fish in the sample. These figures are given for the total sample as well as separately for the three sex classifications. Table 1 in Appendix A presents the analysis of the hypothetical test sample employed in the present study. It may be seen, for example, that in this sample of fish, 55.9% of the total number of fish contained food item C, 9.1% of the males had empty stomachs and 42 out of a total of 93 fish were females.

Table 2.--Dominant Food Item in Stomachs, Expressed as a Percentage of the Number of Stomachs Which Contained Food

Table 2 in Appendix A continues the analysis of stomach content. The table analyzes only those stomachs which contained food at the time of capture. This table is concerned with the dominant food item, that is the one which made up the largest percentage of the total content of each stomach. The percentage of stomachs in which each of the four food items was dominant is calculated. Separate percentage figures are given for male, female and unsexed fish. Also included are the number of fish in which each of the four food items was dominant, the number of fish in the sample containing food, as well as a breakdown of this into the number of males, females and unsexed.

Tables 3, 3A and 3B.--Dominant Food Item in Stomachs, Expressed as a Percentage of the Number of Stomachs Which Contained Food, When Sorted into Ten Length Intervals

A further refinement of the previous table is presented in Table 3 in Appendix A. This series of calculations indicates the dominant food item, expressed as a percentage, for males, females and unsexed fish. However, the additional feature of a breakdown of the data by body length is included. The particular body length measure used, that is total,

standard or fork, is the "basic" length measure discussed under "Total length" in this chapter. If the "basic" measure chosen is total length, the table of analysis appears as Table 3. If standard length is selected it appears as Table 3A, while Table 3B is based on fork length.

Table 3 and its variations (A and B) excludes all fish with empty stomachs. When no fish occur in a particular length interval, for a particular sex classification, a blank appears in the output table. For example, Table 3 in Appendix A shows that there were no male fish in the total length intervals of 501-600 and 801-900. It may also be seen that Table 3 and its variations perform the analysis by sex classification but not for the sample as a whole.

In the hypothetical test sample results, which appear in Table 3 of Appendix A, certain of the findings are as follows. In the total length interval 401-500 food item A was dominant in 28.6% of the males, while item B was dominant in the remaining 71.4%. No female or unsexed fish appear in this length interval. There were a total of 15 fish containing food, in the total length interval 001-100. Similarly there were 19 males in which food item B was dominant.

Three choices of size interval are available in Tables 3, 3A and 3B. The example in Appendix A employs a

length interval of 100 with a maximum length of 999. Additional options are an interval of 50 with a maximum length of 500 or an interval of 25 with a maximum length of 250. In all cases the number of intervals is fixed at 10. These options are further discussed in Chapter IV.

Tables 4, 4A and 4B.--Specimen Number, Sex, Age Total Length, Standard Length, Fork Length Weight, Logarithms of Length and Weight, Condition Factors and Unmagnified Scale Radius of Each Fish in the Sample

Table 4 gives a detail printing of certain items of raw data and certain calculations, for each individual fish. The specimen number, sex, age, total length, standard length, fork length, weight, logarithm of total length, logarithm of weight, total length condition factor (metric), standard length condition factor (metric), fork length condition factor (metric), and scale radius (unmagnified) are included.

In calculating condition factors, those based on millimeters and grams use the formula,

$$K = \frac{100,000\ W}{L^3}$$

while those based on centimeters and dekagrams use the formula,

$$K = \frac{1000\ W}{L^3}$$

Table 4A is identical to Table 4 except that the former gives the logarithm of standard length in place of the logarithm of the total length. Similarly, Table 4B gives the logarithm of fork length in place of the logarithm of total length. This is another example of the use of the "basic" length measure.

Tables 5, 5A and 5B.--Log Weight vs. Log Length, Regression and Correlation Analysis

Table 5 and its variations (A and B) present the log weight vs. log body length, regression and correlation analysis. The regression phase of the analysis is based on the equation,

$$\log \text{weight} = \log c + n \log \text{length}$$

where log c is the y-intercept and n is the slope of the regression. The x variable is the logarithm of length and the y variable is the logarithm of weight. Log c is calculated using the equation,

$$\log c = \frac{\Sigma \log W \cdot \Sigma(\log L)^2 - \Sigma \log L \cdot (\Sigma \log L \cdot \log W)}{N \cdot \Sigma(\log L)^2 - (\Sigma \log L)^2}$$

while n is developed from the equation,

$$n = \frac{\Sigma \log W - N \log c}{\Sigma \log L}$$

The correlation coefficient "r" is calculated using the equation,

$$r = \frac{N\sum xy - (\sum x)(\sum y)}{\sqrt{[N\sum x^2 - (\sum x)^2][N\sum y^2 - (\sum y)^2]}}$$

Table 5 gives the regression and correlation analysis of log weight vs. log total length for the entire sample as well as separately for male, female and unsexed fish. Also included are the total number of fish, the number of fish in each sex classification and the partial calculations used in the analyses. That is, the sum of x, sum of y, sum of x^2, sum of y^2 and the sum of xy. Table 5 in Appendix A is the analysis of the test sample.

Table 5A differs from Table 5 in that it presents the analysis log weight vs. log standard length while Table 5B involves itself with the analysis of log weight vs. log fork length. This is still another example of the computer performing its analysis on the "basic" length measure. In Table 5 and throughout the study, minus quantities are signified by a minus sign at the right end of the series of digits, rather than to the left as is normally the case in non-computer work.

Tables 6, 6A and 6B.--Length vs. Scale Radius, Regression and Correlation Analysis

The regression and correlation analyses for body length vs. scale radius is given in Tables 6, 6A and 6B. The regression equation used is,

$$y = \text{alpha} + \text{beta } x$$

where alpha is the y-intercept and beta is the slope of the line. The x variable is scale radius while the y variable is body length. The equation employed to develop alpha is,

$$\text{alpha} = \frac{\Sigma y \cdot \Sigma x^2 - \Sigma x(\Sigma xy)}{N\Sigma x^2 - (\Sigma x)^2}$$

and for beta is:

$$\text{beta} = \frac{\Sigma y - N \text{ alpha}}{\Sigma x}$$

These are essentially the same equations used in the calculations for the previous table. It is easily demonstrated that these equations can be reduced to the more commonly seen versions.

$$\text{beta} = \frac{n\Sigma xy - (\Sigma x)(\Sigma y)}{n\Sigma x^2 - (\Sigma x)^2}$$

$$\text{alpha} = \bar{y} - \text{beta } \bar{x}$$

The correlation coefficient "r" uses the same equation as given under "Table 5, 5A and 5B."

Table 6 gives the regression and correlation analyses for total length vs. scale radius. The analyses are given for the entire sample as well as separately for male, female and unsexed fish. Also included are the numbers of fish involved as well as the partial calculations used in the study.

Table 6A differs from Table 6 in that the analyses are based on the standard length vs. scale radius relationship. The fork length vs. scale radius relationship is analyzed in Table 6B. Here again is an example of the computer performing the analyses on the "basic" length measure. The analysis of test sample is given in Appendix A.

Tables 7, 7A and 7B.--Length vs. Length, Regression and Correlation Analysis

Tables 7, 7A and 7B give the regression and correlation analyses between the three length measures. Table 7 gives the standard length vs. total length analyses with the former being the y variable. Table 7A calculates the fork length vs. total length relationship with fork length as the y variable. Table 7B presents the fork length vs. standard length relationship with fork length again being the y variable. The equations used in this analyses are identical to those given for the previous series of tables.

The analyses are again performed for the entire sample as well as for each sex classification. The partial calculations and the number of fish involved are also included. The analyses of the hypothetical test sample appear in Appendix A.

Tables 8, 8A and 8B.--Mean Condition Factors Separated Into Ten Length Intervals As Well As the Length Frequency Distribution of the Sample

The condition factors for each individual fish in Tables 4, 4A and 4B are summarized in Tables 8, 8A, 8B, 9, 9A and 9B. Tables 8, 8A and 8B give the mean condition factors of the fish in the sample, when broken down into ten body length intervals. Again, as was discussed under the heading "Tables 3, 3A and 3B" in the present chapter, three choices of interval size are available.

Table 8 analyzes the condition factors with total length as the "basic" length measure. The condition factors are analyzed, and the body length intervals are those based on total length. The total length frequency distribution is also calculated in this table. The analyses are performed on the entire sample as well as separately for each sex classification. The test sample results are presented in Table 8 of Appendix A.

Table 8A employs standard length as the "basic" length measure. Table 8A in Appendix A shows that the condition factors used are those based on standard length (KSL) and that length interval breakdown is also standard length. Similarly, Table 8B performs the analysis with fork length as the "basic" length measure.

Tables 9, 9A and 9B.--Mean Condition Factors By Age As Well As the Age Frequency Distribution of the Sample

Tables 9, 9A and 9B summarize the condition factor data by age. The individual fish in the sample are sorted by age in the computer and the mean condition factors are calculated. This is performed not only for the entire sample but separately for each of the three sex classifications. The maximum age possible is again 12. In Table 9 the analysis involves the total length condition factors while Tables 9A and 9B analyze standard length and fork length condition factors respectively. The number of fish in each classification is also given. Thus the age frequency distribution are given in these tables.

Tables 10, 10A and 10B.--Detail Listing of Specimen Number, Sex, Age, Length, Scale Magnification, and Calculated Lengths at Previous Ages, of Each Fish in the Sample

Tables 10, 10A and 10B give a detailed report of the growth history of each individual fish in the sample. The equation employed in this analysis is,

$$L' = C + \frac{S'}{S} (L-C)$$

where L' is the body length when annulus x was formed, S' is the scale radius to annulus x, L is the body length at capture, S is the total scale radius and C is a correction factor. This factor is the y-intercept (alpha) from the total length vs. scale radius regression given in Tables 6, 6A and 6B. This calculation is performed from age 1 to a maximum age of 12. In Table 10 the growth history is based on total length. Tables 10A and 10B differ in that the calculations are performed for standard length and fork length, respectively. Also included in these tables are the specimen number, sex, age, body length at capture, and the scale-magnification factor employed. The analysis of the test sample is found in Appendix A.

Tables 11, 11A and 11B.--Mean Calculated Lengths at Successive Annuli For All Fish in the Sample

A summary of the detail calculations of the previous set of three tables is given in Tables 11, 11A and 11B. The analysis is given for the entire sample without regard to sex. Analysis for each of the sex classifications are given in later tables. The analysis performed is commonly found in the literature. In the present study, allowance is made to process ages from 1 to a maximum of 12. The mean length at capture for each age is calculated, as well as the mean calculated lengths at previous ages. The mean of each of these calculated lengths at previous ages, for each age, is also given.

Table 11 employs as the basis of calculation total length. Tables 11A and 11B use standard length and fork length. Tables 11, 11A and 11B, located in Appendix A indicate the analysis of the test sample data.

Tables 12, 12A and 12B.--Mean Calculated Lengths at Successive Annuli For Males

Tables 12, 12A and 12B perform the same analysis as the previous set of tables, except that it is calculated for only the male fish in the sample. Again Table 12 computes on the basis of total length, 12A on standard length

and 12B on fork length. The analysis of the test sample is found in Appendix A.

Tables 13, 13A and 13B.--Mean Calculated Lengths at Successive Annuli for Females

The mean calculated lengths at previous ages for females are given in Tables 13, 13A and 13B. Once again the A and B versions are based on standard length and fork length. Appendix A contains the test sample analysis.

Tables 14, 14A and 14B.--Mean Calculated Lengths at Successive Annuli for Unsexed Fish.

Tables 14, 14A and 14B present the mean calculated lengths at previous ages for unsexed fish. The A and B versions base calculations on standard length and fork length. The test sample analysis is again located in Appendix A.

Summary of Output

In Tables where A and B versions occur, only one of the three variations can be obtained from a single computer run. The normal situation is for the computer to produce Tables 1-3 with Program 1 and Tables 4-14 with Program 2. However, if certain sense switches on the computer console are turned on, other combinations are possible. A choice of

Tables 7, 7A or 7B is available on any given computer run. If another switch is turned, Table 3 from Program 1 and Tables 4-6 and 8-14 from Program 2 appear in their A variations while still another switch causes the B versions to be computed. All possible versions may be obtained with three passes of the input cards for each of the two programs. The choice of length-interval size, discussed earlier in this chapter, is also accomplished through this method. Details of these options appear under "Console Operating Instructions" in Chapter IV.

CHAPTER III

TABULATION AND KEY-PUNCHING OF INPUT DATA

The preparation of input data for presentation to the computer may be divided into two distinct phases. These are the collecting, measuring and tabulating of the raw data on a prescribed tabulation sheet by the fisheries worker, and the transcribing of data from the tabulation sheet into punched card form by the key-puncher. The importance of accuracy in the preparation of the input data hardly needs to be emphasized. However, a rigid, literal following of instructions presented in this chapter is a prerequisite to a smooth processing of the data.

Methods of measuring and collecting the type of data analyzed in this study are more adequately dealt with in other publications. This chapter, therefore, is involved with the tabulation and key-punching of the input data.

Tabulation of Input Data

The tabulation sheet required for the system of analysis presented in this study is shown in Figure 2. Its

TABULATION

1	4	8	10	11	12	15	18	21	25	28	31	34	37	40	43	46	49	52	55	58	61	64	66	69	72	75	78
EXP. NO.	SPEC. NO.	AGE	SEX	UNITS	LENGTH TOTAL	LENGTH STAND.	LENGTH FORK	WEIGHT	CAPT.	SCALE RADIUS AT ANNULUS 1	2	3	4	5	6	7	8	9	10	11	12	SMCAGNEI F.	% FOOD ITEM A	B	C	D	
001	0001	01	0		050	043	047	0002	030	020																	
001	0002	030			080	071	077	0007	069	035	045	055										99	050	030	080	020	
001	0003	020			060	054	058	0006	050	030	044											99	050	010	010	030	
001	0004	020			060	053	057	0008	037	020	029											99	080	000	000	020	
																						99	090	000	010	000	
001	0045	01	1		050	043	047	0002	032	026																	
001	0046	03	1		079	070	076	0007	067	035	047	058										99	060	040	000	000	
																						99	030	000	000	070	
001	0086	12	1		990	891	965	9950	014	001	002	003	004	005	006	007	008	010	011	012	013	01	000	001	100	000	
001	0087	02			055	049	053	0002	042	020	036											99	100	000	000	000	
001	0088	02			075	068	073	0006	064	030	045											99	050	010	010	030	
001	0089	03			085	077	083	0008	037	010	023	030										47	000	100	000	000	
001	0090	03			095	086	092	0008	090	033	050	080										99	100	000	000	000	
001	0091	01			045	041	044	0001	044	030												99	001	100	000	000	
001	0092	01			045	041	044	0001	040	029												99	100	000	000	000	
001	0093	04			122	110	119	0016	124	031	044	070	100									99	100	000	000	000	

Figure 2 Tabulation Sheet

importance lies in the fact that it is designed to tabulate data in exactly the order the data appear in punched-card form. The tabulation sheets thus serve as source documents for the key-puncher. The numbers which appear at the top of the sheet correspond to the 80 columns on an IBM punched-card. It should be noted that high order zeros should be included in tabulating the raw data. These are required when the data are transformed into key-punched form and their inclusion on the tabulation sheet greatly reduces the possibility of key-punching errors. For example, in specimen number 0001 the total length of the fish was 50mm. As three spaces are alloted for tabulating total length the value is tabulated as 050. This holds in tabulating all other input data. It should also be noted when tabulating percentage of food items A, B, C and D, that if the stomach content was entirely made up of one food item (e.g. Item A in Specimen Number 0087) that zeros must be included under other food items (i.e. Items B, C and D in Specimen 0087). If a stomach was empty, zeros must appear under all four food items.

In the case of scale radii, those annuli which are not appropriate for a given specimen, that is, for example, annuli 4-12 in a three year old fish, are left blank. This may be observed in the sample tabulation sheet in Figure 2.

It has been indicated earlier that two computer programs are necessary for complete analysis of the input data. Program 1, which computes and prints the stomach content data, requires as input the sex of each fish, at least one of the length measures, as well as percentage of items A, B, C and D. However, if in tabulation, the column "Sex" is left blank, the analysis will continue with all fish being considered to be unsexed.

Program 2, which computes and prints all other tables of analysis and is completely independent of Program 1, absolutely requires as input data the age, sex, units, at least one length measure, weight, scale radii at capture and previous annuli, and scale magnification. Again the column "Sex" may be left blank resulting in all fish being processed as unsexed. Specimen number, while not absolutely necessary, is printed in all tables where detailed information is given for each individual fish in the sample. If it is not included in the input data, blanks will appear under this heading in the output tables.

It should be emphasized that experiment number is not required for either of the computer programs in this study. However, as has been indicated earlier, its inclusion in the punched-card deck provides a permanent record of the particular sample of fish which the cards represent.

It is suggested that the fisheries worker, in drawing up tabulation sheets of the type indicated, double the size of the sheet which appears in this study. This will assist the key-puncher in interpreting the tabulated figures.

Key-Punching of Input Data

The key-punching of the input data is best performed by an experienced IBM key-puncher. This service is readily available in IBM Data Centers or Service Bureaus. The approximate cost of this service would be $10 to $15 per 100 cards (fish), including verification.

Virtually no specific instructions are necessary for the key-puncher. As is commonly the practice, high order zeros are always punched. The numbers which appear at the top of each tabulation sheet indicate the corresponding card columns. Columns 78-80 are unused. All punching is numeric only and no multiple punching of card columns is used. Printing of the key-punched information is unnecessary although it may be included at the discretion of the fisheries worker. It is imperative that all key-punching be verified.

CHAPTER IV

COMPUTER ANALYSIS OF INPUT DATA

When the data have been tabulated and transcribed into punched-card form, they are ready for computer analysis. All that is now required on the part of the investigator is the securing of either or both of the computer programs (in condensed punched-card form) from the author, c/o The Department of Fisheries and Wildlife, Michigan State University. If the investigator wishes access to all possible tables of analysis (Tables 1-14 plus A and B versions), Programs 1 and 2 are required. If only the stomach content phase is desired only Program 1 is required, while all other analyses are obtained from Program 2.

Basic Computer Requirements

Special features required on the IBM 1401 for the program developed in this study are as follows:

1. A minimum of 8K (8000) storage locations.
2. Indexing Feature (3 Registers).
3. Multiply-Divide Feature.
4. Store Address Register Feature (SBR).
5. High-Low-Equal Compare Feature.
6. Sense Switches Feature (A-G).

7. Two Magnetic Tape Units (7330 or 729) for Program 2.

Console Operating Instructions

General Features

The investigator should decide, well before the analysis is to take place, exactly which of the tables of analysis he wishes performed. That is, he should decide whether A and B versions are desired in addition to or instead of the standard tables, For example, if only total length is included in the input data, then Table 7 can not be computed. (Table 7 is the regression and correlation analysis between two of the length measures.) Similarly, if only total length is included in the input, only the standard versions of the tables (not A or B) can be computed. Details of selecting the correct tables of analysis, for any given computer run, are given in Tables I and II. These tables incorporate the concept of "basic" length measure in any given computer run. In the example just cited, the data cards would be processed once with Program 1 using Combination 1 (Table I), and once with Program 2 using Combination 1 (Table II). In the latter run, the special master card which precedes the data cards, would require a 1 punch in column 1, to eliminate Table 7. It should be noted that the

Table I.--Sense switches for program 1.

Combi-nation	Special Master Card	Sense Switches On	Tables Computed	Length Interval Size
1	BLANK	A	1,2,3	100 mm.
2	BLANK	A,D	1,2,3A	100 mm.
3	BLANK	A,E	1,2,3B	100 mm.
4	BLANK	A,B	1,2,3	50 mm.
5	BLANK	A,B,D	1,2,3A	50 mm.
6	BLANK	A,B,E	1,2,3B	50 mm.
7	BLANK	A,C	1,2,3	25 mm.
8	BLANK	A,C,D	1,2,3A	25 mm.
9	BLANK	A,C,E	1,2,3B	25 mm.

Note 1: The special master card (X in 80) serves no funtion in Program 1. Processing will continue whether or not it is included immediately preceding the data cards.

Note 2: A "blank master" is defined as one which contains only X, in column 80.

Table II.--Sense switches for program 2.

Combi-nation	Special Master Card	Sense Switches On	Tables Computed	Length Interval Size
1	BLANK	A	4,5,6,7,8,9, 10,11,12,13,14	100 mm.
2	BLANK	A,F	4,5,6,7A,8,9, 10,11,12,13,14	100 mm.
3	BLANK	A,G	4,5,6,7B,8,9, 10,11,12,13,14	100 mm.
4	BLANK	A,D	4A,5A,6A,7,8A,9A, 10A,11A,12A,13A, 14A	100 mm.
5	BLANK	A,D,F	4A,5A,6A,7A,8A, 9A,10A,11A,12A, 13A,14A	100 mm.
6	BLANK	A,D,G	4A,5A,6A,7B,8A, 9A,10A,11A,12A, 13A,14A	100 mm.
7	BLANK	A,E	4B,5B,6B,7,8B, 9B,10B,11B,12B, 13B,14B	100 mm.
8	BLANK	A,E,F	4B,5B,6B,7A,8B, 9B,10B 11B,12B, 13B,14B	100 mm.
9	BLANK	A,E,F	4B,5B,6B,7B,8B, 9B,10B,11B,12B, 13B,14B	100 mm.

Note 1: In any of the above combinations if switch B is also turned on, the length interval size (Tables 8, 8A or 8B) will be changed from 100 mm. to 50 mm. If switch C instead of B is turned on the interval will be 25 mm.

Note 2: A "blank master" is defined as one which contains only the X in column 80.

Note 3: If the special master card which precedes the data input cards has a 1 in column 1, then Table 7 or its variations will be completely deleted from any particular combination above.

Note 4: A 1 in column 2 of the special master card permits the use of the y-intercept of each particular sex classification in computing length at previous ages. (see "General features").

above plan applies only if the length interval size, where applicable, is 100 mm. Tables I and II indicate the necessary changes for the computation to be made on a basis on an interval of 50 or 25 mm.

If all possible input data are included in the data cards, all possible tables of analysis may be computed in three separate computer runs with each of Programs 1 and 2. Again dealing with the instance where the length interval size is to be 100 mm., the data cards would be analyzed by Program 1, once with Combination 1, once with Combination 2 and once with Combination 3. The data cards would then be analyzed by Program 2 using Combination 1, then 5 and then 9.

Normally, in computing lengths at previous ages (Tables 10-14 and A and B variations) the correction factor used in the equation for fish of all three sex classifications is the y-intercept (alpha) of the body length-scale radius regression, for all fish in the sample regardless of sex. If the investigator desires to use the specific appropriate

alpha for each sex classification in these calculations, a 1 in column 2 of the special master card should be punched.

Special Master Card

A special master card with an X or 11 punch in column 80 is included to allow greater flexibility in output analyses. Its functions are to suppress processing of Table 7 where warranted and to allow a choice of correction factor in computing lengths at previous ages. These functions are discussed above, under "General Features."

Flow of Cards to Computer

A flow chart for the two computer programs in this study is presented in Figure 3. All computer operations should focus on this chart. It may be seen that in both Programs 1 and 2 the order of cards entering the computer is the appropriate program deck, followed by the special master card, followed by the data cards. The data cards must be sorted by sex with males preceding females which in turn must precede unsexed fish, when using Program 1.

Error Conditions

A list of error conditions is presented in Table III. In most if not all instances they result from gross

Figure 3. Computer Flow Charts

PROGRAM 1

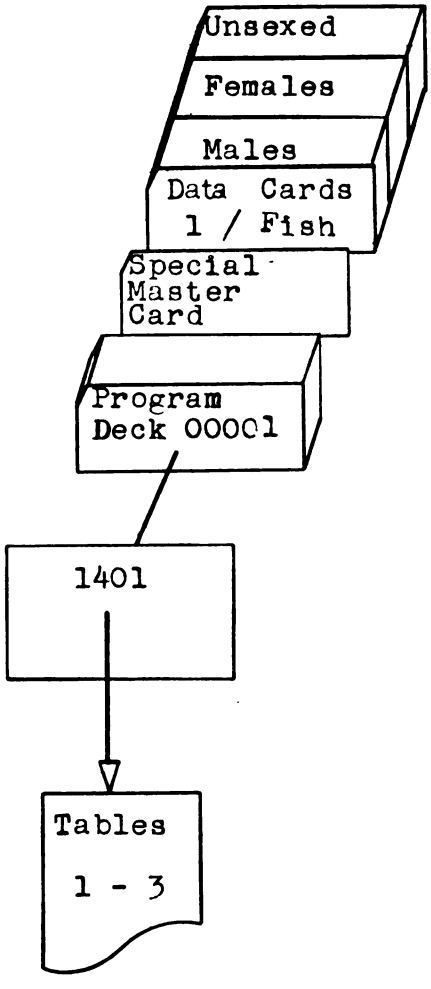

1. See Table 1 for Sense Switch setting and Special Master Card
2. No Tape Units required.
3. See text for Carriage Tape & centering of paper.
4. Sort by sex; Male (0 in 10) Female (1 in 10) and unsexed (blank in 10)

PROGRAM 2

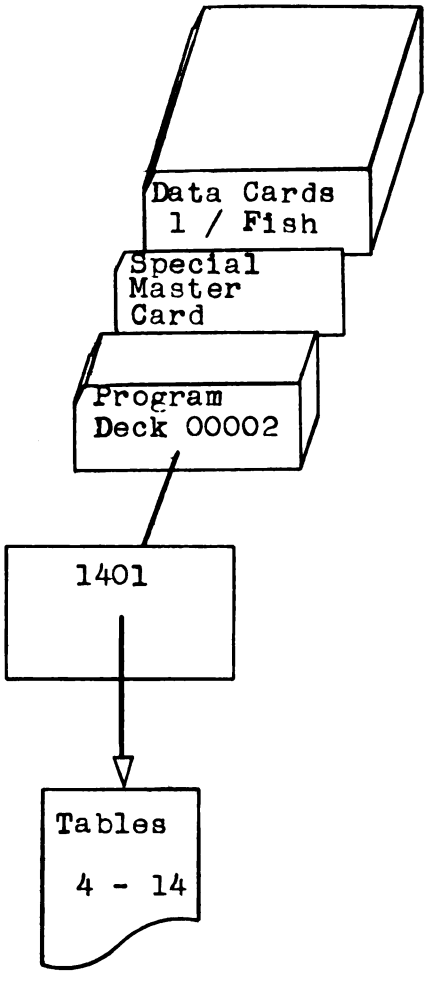

1. See Table 2 for Sense Switch setting and Special Master Card.
2. Tape Units 1 & 2 required.
3. See text for Carriage Tape & centering of paper.

Table III.--Program halts (BA821)

Note: To display halt number press A or B Address Register Key on 1401 Console and number will appear in Storage Address lights.

Program 1

0001	Key-punch error in column 10, or missorting of data cards (males must be followed by females and unsexed). Make correction and restart job.
0999	End of job.

Program 2

0001	Key-punch error in column 10. Column 10 should contain either 0 (male), 1 (female) or be blank (unsexed). Make correction and restart job.
0002	Tape transmission error in writing card image onto Tape Unit 1. Attempt to write has been made 10 times including a skip and blank tape. Change tape and restart job.
0003	Tape transmission error in reading card image from Tape Unit 1 into core. Attempt to read has been made 10 times. Change tape unit and restart job.
0004	Key-punch error in column 10. This condition should have been detected earlier by 0001.
0005	Tape transmission error in placing last part of program onto Tape Unit 2. Attempt to write has been made 10 times. Change tape and restart job.
0006	Tape transmission error in recalling last part of program from Tape Unit 2. Attempt to read has been made 10 times. Change tape unit and restart job.
0999	End of job.

key-punching or sorting errors and require a complete restart of the job.

Paper and Printing Specifications

The ideal paper size for this study is 11 x 8½ inches. The width of 11 inches is after the two side edges, containing the holes, have been removed. Thus if the width of each edge is ½ inch the overall paper size would be 12 x 8½. If paper of exactly these dimensions is unavailable, paper whose width is greater than 12 inches may be substituted. In this instance the excess width may be trimmed at a later date at the discretion of the individual investigator.

The number of copies of output tables desired is also governed by the individual needs of the investigator. The use of multi-part paper allows for one or more carbon copies of the original output tables.

Print positions 210-299 are employed in this study. At least one inch of margin should be allowed at each end of this range.

Carriage Control Tape

One carriage control tape serves both Programs 1 and 2. Allowing for a two cycle carriage tape, the length is 102 lines. A punch in channel 1 is required in lines 9 and 60;

in channel 2, in lines 14 and 65; in channel 3, in lines 18 and 69; and in channel 12, in lines 44 and 95. A minor adjustment in the length of the carriage tape will permit the use of paper of greater than 8½ inches in length.

In order to allow a margin of 1½ inches at the top of each output table the carriage must be restored, prior to computer operation, 1½ inches from the top of the paper.

CHAPTER V

MISCELLANEOUS INFORMATION AND SUMMARY

Certain items of information, while not necessary for successful utilization of the programs developed in this study, are of interest. These are dealt with in the present chapter along with a summary of the study.

Miscellaneous Information

Block Diagrams of Programs

Appendix B contains the block diagrams of Programs 1 and 2. While these are not required in making use of the programs, their inclusion permits a greater understanding of the programs on the part of the computer-oriented individual. Combined with the program listings, which are described below, the block diagrams would permit an experienced computer programmer to make minor modifications to the programs. These modifications might enable the fishery investigator to obtain a system of analysis more uniquely suited to his own specific needs.

Program Listings

Print listings of the two programs of analysis are given in Appendix C. The assembly of the two programs was accomplished using the SKS III assembler.

Calculation of Logarithms

Several of the analyses in the study involve the calculation of logarithms by the computer. The mathematical approximation employed in the calculation was,

$$\log_{10} X = \frac{1}{2} + C_1 \left(\frac{X - \sqrt{10}}{X + \sqrt{10}}\right) + C_3 \left(\frac{X - \sqrt{10}}{X + \sqrt{10}}\right)^3$$

where $C_1 = 0.86304$ and $C_3 = 0.36415$. This approximation serves for $1 \leq X \leq 10$, and thus the "characteristic" must be determined, by the computer, before the "mantissa" is calculated. The accuracy of the result has been established at $\pm .0005$, according to Hastings (1955).

Calculation of Square Root

In the correlation analysis of Tables 5-7 the computer is required to calculate square roots. The sub-routine employed was a slight modification of an existing one from the IBM 1401 Program Library (3.0.003), by Johnson.

Timing and Approximate Costs

The processing time consumed for Program 1 is given by the formula,

$$T = 18 + 0.15\ (N)$$

and for program 2 is calculated using,

$$T = 48 + 0.6\ (N)$$

where N is the number of data cards (fish) and T is the time expressed in seconds. These equations have been employed in constructing Table IV., which gives approximate times for processing samples of various size. It should be emphasized that these values are for one computer run using a 1401 with 7330 tape units. To achieve all the output tables which appear in Appendix A, three computer runs with each of Program 1 and 2 are necessary.

Exact costing of the system of analysis developed in this study is difficult. Rental of computer facilities of the type required vary from area to area. However, a figure of $150/hour would be a fair estimate.

Summary

The present study is an attempt to minimize the amount of tedious calculation which plagues the student of fish populations. It is therefore an attempt to increase

Table IV.--Running time for Programs 1 and 2.

No. of Fish	Running Time for Program 1	Running Time for Program 2
100	1/2 min.	1 4/5 mins.
1000	2 1/2 mins.	10 4/5 mins.
9999	25 1/3 mins.	100 4/5 mins.

the productivity of these workers. It is hoped that investigators, freed from some of the heavy computations, will be encouraged to proceed into more extensive and more varied studies in the areas covered. However, while the analyses covered in this investigation were in most instances chosen on the basis of wide and general usage, they will certainly not satisfy the needs of all investigations. With this in mind, an important consideration in the present study was the stimulation of thought in electronic computer analysis of fishery statistics. Unfortunately, it would be presumptuous to believe that the present study is completely free of pitfalls or beyond the need of improvement. It is therefore, strongly hoped that the errors made in the present study will help guide in the development of other systems of computer analysis. Thus gradually more and better systems will evolve. This can, however, only occur if the experiences of others in the use of the programs developed in this study

are reported to the author. In this way modifications may be made of existing programs, and the suggestions considered in future developments.

LITERATURE CITED

Benson, D. A. 1957. A Mechanical Analysis of Hunter's Reports. Nova Scotia Dept. of Lands & Forests. Truro, N. S., (Mimeo.) 1-12.

California Bureau of Marine Fisheries. 1952. The Commercial Fish Catch of California For the Year 1950. Calif. Dept. of Fish & Game, Fish Bull., No. 86:1-120.

Dumont, W. H. 1959. Maryland General Canvas: Procedure Report. Branch of Statistics, U.S. Fish & Wildlife Service. (Mimeo.) 1-6.

Eberhardt, L. and D. Hayne. 1958. Estimating Duplication in Licensing. Mich. Dept. Conservation Game Comm. Report (2197) 1-14.

El-Zarka. 1959. Fluctuations in the Population of Yellow Perch, Perca flavescens (Mitchell), Fish and Wildlife Service. Vol. 59, No. 151:365-415.

Hammer, R. C., Hensel, H. S. and R. E. Tiller. 1948. Maryland Commercial Fishing Statistics, 1944-45. Md. Dept. Research & Educ. Publ. No. 69:1-48.

Hastings, Cecil Jr. 1955. Approximations for Digital Computers. Princeton University Press, Princeton, N.J. 1-200.

International Business Machines Corp. 1962. Reference Manual, IBM 1401 Data Processing System. Edition A24-1403-5:1-171.

Lagler, K. F. 1956. Freshwater Fishery Biology. W. C. Brown Co. Dubuque, Iowa. 1-346.

Lambou, V. W. 1959. A Contribution Toward a Bibliography on Use of Machine Methods in Processing Fishery Data. Louisiana Wildlife & Fisheries Comm. (Mimeo.)

Lambou, V. W. 1959. Simplified Creel Census Program for Punch Card Tabulation. Louisiana Wildlife and Fisheries Comm. (Mimeo.) 1-35.

Lambou, V. W. 1959. Use of Machine Methods in Processing Fishery Data. Presented at 13th Ann. Conf. S. E. Assoc. of Game & Fish Comm. Oct. 1959, Baltimore, Md. 116-120.

Leeper, B., H. Stern, Jr. and V. W. Lambou. 1958. Some Uses of Punch Card Methods in the Tabulation and Analysis of Fishery Research Data. Proceedings of 11th Ann. Conf. S. E. Assoc. of Game & Fish Comm., 1957. 226-232.

Mansueti, R. 1959. Comments on the Need for Critical Fishery Research Planning and Electronic Data Processing. Presented at 13th Ann. Conf. S. E. Assoc. of Game & Fish Comm., Oct. 1959. Baltimore, Md. 108-113.

National Oceanographic Data Center. 1962. Automatic Processing of Oceanographic Station Data (Preliminary Report.) Nat. Oceanogr. Data Center. (Unpubl. Man.) 1-6.

National Oceanographic Data Center. 1962. Summary of Development of Biological Information (Data) Holding-Recall Systems at the National Oceanographic Data Center. Nat. Oceanogr. Data Center. (Mimeo.) 1-2.

Ricker, W. E. 1958. Handbook of Computations for Biological Statistics of Fish Populations. Fisheries Research Board of Canada, Bull. No. 119, Ottawa. 1-277.

Rounsefell, G. A. and W. H. Everhart. 1953. Fishery Science. John Wiley and Sons, Inc. N.Y. 1-403.

Schultz, V. 1954. Wildlife Surveys: A Discussion of A Sampling Procedure and a Survey Design. Tenn. Game & Fish Comm. 1-153.

Tomlinson, P. K. and N. J. Abramson. 1961. Fitting a von Bertalanffy Growth Curve by Least Squares. Calif. Dept. of Fish & Game, Fish Bull. No. 116:7-69.

Walker, H. M. and J. Lev. 1953. Statistical Inference. Henry Holt and Co. N.Y. 1-487.

Wiener, N. 1961. Cybernetics. The M.I.T. Press and John Wiley and Sons, Inc. N.Y. 1-203.

APPENDIX A

TABLE 1

	MALE	FEM	UNSEX	TOTAL	NO OF FISH
ITEM A	70.5	57.1	71.4	64.5	60
ITEM B	70.5	61.9	42.9	64.5	60
ITEM C	63.6	54.8	14.3	55.9	52
ITEM D	31.8	21.4	14.3	25.8	24
EMPTY	9.1	4.8	0.0	6.5	6
NO OF FISH	44	42	7	93	

TABLE 2

	MALE	FEM	UNSEX	TOTAL	NO OF FISH
ITEM A	20.0	15.0	71.4	21.8	19
ITEM B	47.5	40.0	28.6	42.5	37
ITEM C	27.5	35.0	0.0	28.7	25
ITEM D	5.0	10.0	0.0	6.9	6
NO OF FISH	40	40	7	87	

TABLE 3

TOTAL LENGTH	ITEM A			ITEM B			ITEM C			ITEM D			NO OF FISH
	MALE	FEM	UNSEX	MALE	FEM	UNSEX	MALE	FEM	UNSEX	MALE	FEM	UNSEX	
001-100	80.0	50.0	66.7	0.0	0.0	33.3	20.0	25.0	0.0	0.0	25.0	0.0	15
101-200	20.0	20.0	100.0	40.0	60.0	0.0	20.0	20.0	0.0	20.0	0.0	0.0	11
201-300	0.0	20.0		75.0	20.0		25.0	40.0		0.0	20.0		9
301-400	25.0	20.0		75.0	60.0		0.0	0.0		0.0	20.0		9
401-500	28.6			71.4			0.0			0.0			7
501-600		0.0			100.0			0.0			0.0		1
601-700	0.0	0.0		40.0	40.0		60.0	60.0		0.0	0.0		10
701-800	0.0	0.0		80.0	100.0		20.0	0.0		0.0	0.0		10
801-900		20.0			20.0			60.0			0.0		5
901-999	0.0	0.0		0.0	0.0		80.0	80.0		20.0	20.0		10
NO OF FISH	8	6	5	19	16	2	11	14		2	4		

TABLE 3A

STAND LENGTH	ITEM A			ITEM B			ITEM C			ITEM D			NO OF FISH
	MALE	FEM	UNSEX	MALE	FEM	UNSEX	MALE	FEM	UNSEX	MALE	FEM	UNSEX	
001-100	80.0	50.0	66.7	0.0	0.0	33.3	20.0	25.0	0.0	0.0	25.0	0.0	15
101-200	14.3	14.3	100.0	42.9	57.1	0.0	28.6	28.6	0.0	14.3	0.0	0.0	15
201-300	0.0	20.0		100.0	20.0		0.0	20.0		0.0	40.0		8
301-400	28.6	33.3		71.4	66.7		0.0	0.0		0.0	0.0		10
401-500	33.3			66.7			0.0			0.0			3
501-600	0.0	0.0		66.7	50.0		33.3	50.0		0.0	0.0		7
601-700	0.0	0.0		66.7	83.3		33.3	16.7		0.0	0.0		12
701-800	0.0	20.0		0.0	40.0		100.0	40.0		0.0	0.0		6
801-900	0.0	0.0		0.0	0.0		80.0	83.3		20.0	16.7		11
901-999													
NO OF FISH	8	6	5	19	16	2	11	14		2	4		

TABLE 3B

FCRK LENGTH	ITEM A			ITEM B			ITEM C			ITEM D			NO OF FISH
	MALE	FEM	UNSEX	MALE	FEM	UNSEX	MALE	FEM	UNSEX	MALE	FEM	UNSEX	
0C1-1C0	80.0	50.0	66.7	0.0	0.C	33.3	20.0	25.0	0.0	0.0	25.0	0.0	15
1C1-200	20.0	20.0	100.0	40.0	60.C	0.0	20.0	20.0	0.0	20.0	0.0	0.0	11
201-3C0	0.0	16.7		80.0	33.3		20.0	33.3		0.0	16.7		11
3C1-400	20.0	25.0		80.0	50.C		0.0	0.0		0.0	25.0		9
4C1-500	40.0			60.0			0.0			0.0			5
5C1-6C0		0.0			100.C			0.0			0.0		1
6C1-7C0	0.0	0.0		50.0	5C.C		5C.0	50.0		0.0	0.0		12
7C1-800	0.0	0.0		75.0	80.0		25.0	20.0		0.0	0.0		9
8C1-900	0.0	20.0		0.0	2C.C		100.0	60.0		0.0	0.0		6
9C1-999	C.0	0.0		0.0	0.C		75.0	75.0		25.0	25.0		8
NC CF FISH	8	6	5	19	16	2	11	14		2	4		

TABLE 4

SPEC NO	SEX	AGE	TOTAL LENGTH	STAND LENGTH	FORK LENGTH	WEIGHT	LOG T.L	LOG WEIGHT	KTL	KSL	KFL	SCALE RAD
1	MALE	1	50	43	47	2	1.69	0.30	1.60	2.52	1.93	.30
2	MALE	3	80	71	77	7	1.90	0.84	1.37	1.96	1.53	.70
3	MALE	2	60	54	58	6	1.77	0.77	2.78	3.81	3.08	.51
4	MALE	2	60	53	57	8	1.77	0.90	3.70	5.37	4.32	.37
5	MALE	4	120	106	116	10	2.07	1.00	0.58	0.84	0.64	1.25
6	MALE	3	100	90	97	20	2.00	1.30	2.00	2.74	2.19	.99
7	MALE	4	140	124	136	30	2.14	1.47	1.09	1.57	1.19	1.56
8	MALE	4	160	143	155	45	2.20	1.65	1.10	1.54	1.21	1.77
9	MALE	5	180	160	174	70	2.25	1.84	1.20	1.71	1.33	2.26
10	MALE	5	200	179	194	80	2.30	1.90	1.00	1.39	1.10	2.54
11	MALE	5	210	188	203	85	2.32	1.92	0.92	1.28	1.02	2.69
12	MALE	5	220	198	214	135	2.34	2.12	1.27	1.74	1.38	2.72
13	MALE	5	230	205	224	185	2.36	2.26	1.52	2.15	1.65	2.82
14	MALE	5	240	215	234	225	2.38	2.35	1.63	2.26	1.76	3.01
15	MALE	5	250	225	243	280	2.39	2.44	1.79	2.46	1.95	3.17
16	MALE	6	301	269	293	300	2.47	2.47	1.10	1.54	1.19	4.03
17	MALE	6	320	288	312	375	2.50	2.57	1.14	1.57	1.23	4.34
18	MALE	6	340	305	331	555	2.53	2.74	1.41	1.96	1.53	4.51
19	MALE	6	360	322	350	600	2.55	2.77	1.29	1.80	1.40	4.82
20	MALE	6	400	360	390	750	2.60	2.87	1.17	1.61	1.26	5.45
21	MALE	7	420	376	409	1025	2.62	3.01	1.38	1.93	1.50	5.65
22	MALE	7	440	395	429	1030	2.64	3.01	1.21	1.67	1.30	5.95
23	MALE	7	460	414	448	1010	2.66	3.00	1.04	1.42	1.12	6.11
24	MALE	7	480	433	468	1300	2.68	3.11	1.18	1.60	1.27	6.77
25	MALE	7	499	448	461	1350	2.69	3.12	1.09	1.50	1.38	6.75
26	MALE	6	406	360	394	800	2.60	2.90	1.20	1.71	1.31	5.61
27	MALE	6	402	355	390	750	2.60	2.87	1.15	1.68	1.26	5.44
28	MALE	7	506	450	493	1400	2.70	3.14	1.08	1.54	1.17	6.66
29	MALE	7	509	450	495	1490	2.70	3.17	1.13	1.64	1.23	6.96

TABLE 4

SPEC NO	SEX	AGE	TOTAL LENGTH	STAND LENGTH	FORK LENGTH	WEIGHT	LOG T.L	LOG WEIGHT	KTL	KSL	KFL	SCALE RAD
30	MALE	8	620	550	602	2705	2.79	3.43	1.13	1.63	1.24	8.28
31	MALE	9	640	575	624	2910	2.80	3.46	1.11	1.53	1.20	8.98
32	MALE	9	660	593	643	3680	2.81	3.56	1.28	1.76	1.38	8.45
33	MALE	9	680	611	662	4053	2.83	3.60	1.29	1.78	1.40	10.00
34	MALE	9	700	628	682	4100	2.84	3.61	1.20	1.66	1.29	9.21
35	MALE	9	710	638	692	4200	2.85	3.62	1.17	1.62	1.27	9.17
36	MALE	9	730	656	711	5300	2.86	3.72	1.36	1.88	1.47	10.00
37	MALE	9	740	665	720	5300	2.86	3.72	1.31	1.80	1.42	11.49
38	MALE	9	750	674	730	4505	2.87	3.65	1.07	1.47	1.16	10.00
39	MALE	10	799	719	779	6500	2.90	3.81	1.27	1.75	1.37	12.00
40	MALE	11	920	826	897	9500	2.96	3.97	1.22	1.69	1.32	13.50
41	MALE	12	940	844	916	7000	2.97	3.84	0.84	1.16	0.91	12.50
42	MALE	12	960	862	935	7990	2.98	3.90	0.90	1.25	0.98	13.50
43	MALE	12	980	880	954	8000	2.99	3.90	0.85	1.17	0.92	13.00
44	MALE	12	999	897	972	9999	2.99	3.99	1.00	1.39	1.09	14.00
45	FEM	1	50	43	47	2	1.69	0.30	1.60	2.52	1.93	.32
46	FEM	3	79	70	76	7	1.89	0.84	1.42	2.04	1.59	.68
47	FEM	2	58	52	56	6	1.76	0.77	3.08	4.27	3.42	.47
48	FEM	3	100	89	97	25	2.00	1.39	2.50	3.55	2.74	1.07
49	FEM	4	118	104	114	10	2.07	1.00	0.61	0.89	0.67	1.17
50	FEM	4	142	126	138	34	2.15	1.53	1.19	1.70	1.29	1.65
51	FEM	4	155	139	151	45	2.19	1.65	1.21	1.68	1.31	1.80
52	FEM	5	180	160	174	71	2.25	1.85	1.22	1.73	1.35	2.36
53	FEM	5	200	179	195	86	2.30	1.93	1.08	1.50	1.16	2.42
54	FEM	5	210	187	203	88	2.32	1.94	0.95	1.35	1.05	2.78
55	FEM	5	210	189	203	135	2.32	2.12	1.46	2.00	1.61	2.61
56	FEM	5	230	205	224	190	2.36	2.27	1.56	2.21	1.69	2.87
57	FEM	5	245	220	240	225	2.38	2.35	1.53	2.11	1.63	3.12
58	FEM	5	252	227	245	290	2.40	2.46	1.81	2.48	1.97	3.11

TABLE 4

SPEC NO	SEX	AGE	TOTAL LENGTH	STAND LENGTH	FORK LENGTH	WEIGHT	LOG T.L	LOG WEIGHT	KTL	KSL	KFL	SCALE RAD
59	FEM	6	301	269	294	300	2.47	2.47	1.10	1.54	1.18	3.98
60	FEM	6	320	288	313	380	2.50	2.57	1.16	1.59	1.24	4.48
61	FEM	6	340	305	332	559	2.53	2.74	1.42	1.97	1.53	4.56
62	FEM	6	360	322	351	600	2.55	2.77	1.29	1.80	1.39	4.65
63	FEM	6	400	360	389	755	2.60	2.87	1.18	1.62	1.28	5.29
64	FEM	7	509	450	496	1450	2.70	3.16	1.10	1.59	1.19	6.96
65	FEM	7	510	452	495	1500	2.70	3.17	1.13	1.62	1.24	7.00
66	FEM	8	590	530	575	2506	2.77	3.39	1.22	1.68	1.32	8.02
67	FEM	8	620	550	602	2780	2.79	3.44	1.17	1.67	1.27	8.30
68	FEM	9	640	575	624	3000	2.80	3.47	1.14	1.58	1.23	9.00
69	FEM	9	665	597	647	3720	2.82	3.57	1.26	1.75	1.37	8.51
70	FEM	9	670	603	652	4053	2.82	3.60	1.35	1.85	1.46	9.68
71	FEM	9	700	628	682	4150	2.84	3.61	1.21	1.68	1.31	9.21
72	FEM	9	710	638	692	4250	2.85	3.62	1.19	1.64	1.28	9.28
73	FEM	9	732	657	713	5310	2.86	3.72	1.35	1.87	1.46	9.83
74	FEM	9	740	665	720	5330	2.86	3.72	1.32	1.81	1.43	10.66
75	FEM	9	745	669	724	4510	2.87	3.65	1.09	1.51	1.19	9.83
76	FEM	10	795	717	777	6500	2.90	3.81	1.29	1.76	1.39	11.49
77	FEM	10	820	738	800	7010	2.91	3.84	1.27	1.74	1.37	11.70
78	FEM	10	840	756	819	7820	2.92	3.89	1.32	1.81	1.42	12.00
79	FEM	10	860	774	845	8723	2.93	3.94	1.37	1.88	1.45	13.79
80	FEM	11	880	792	858	8932	2.94	3.95	1.31	1.80	1.41	13.94
81	FEM	11	900	810	876	9222	2.95	3.96	1.27	1.74	1.37	13.21
82	FEM	11	920	826	897	9555	2.96	3.98	1.23	1.70	1.32	12.49
83	FEM	12	945	848	920	9999	2.97	3.99	1.18	1.64	1.28	13.23
84	FEM	12	963	864	937	7995	2.98	3.90	0.90	1.24	0.97	13.23
85	FEM	12	975	876	950	8000	2.98	3.90	0.86	1.19	0.93	13.47
86	FEM	12	990	891	965	9950	2.99	3.99	1.03	1.41	1.11	14.00
87	UNSEX	2	55	49	53	2	1.74	0.30	1.20	1.70	1.34	.42

TABLE 4

SPEC NO	SEX	AGE	TOTAL LENGTH	STAND LENGTH	FORK LENGTH	WEIGHT	LOG T.L	LOG WEIGHT	KTL	KSL	KFL	SCALE RAD
88	UNSEX	2	75	68	73	6	1.87	0.77	1.42	1.91	1.54	.65
89	UNSEX	3	85	77	83	8	1.92	0.90	1.30	1.75	1.40	.79
90	UNSEX	3	95	86	92	8	1.97	0.90	0.93	1.26	1.03	.91
91	UNSEX	1	45	41	44	1	1.65	0.00	1.10	1.45	1.17	.44
92	UNSEX	1	45	41	44	1	1.65	0.00	1.10	1.45	1.17	.40
93	UNSEX	4	122	110	119	16	2.08	1.20	0.88	1.20	0.95	1.25

TABLE 4A

SPEC NO	SEX	AGE	TOTAL LENGTH	STAND LENGTH	FORK LENGTH	WEIGHT	LOG S.L	LOG WEIGHT	KTL	KSL	KFL	SCALE RAD
1	MALE	1	50	43	47	2	1.63	0.30	1.60	2.52	1.93	.30
2	MALE	3	80	71	77	7	1.85	0.84	1.37	1.96	1.53	.70
3	MALE	2	60	54	58	6	1.73	0.77	2.78	3.81	3.08	.51
4	MALE	2	60	53	57	8	1.72	0.90	3.70	5.37	4.32	.37
5	MALE	4	120	106	116	10	2.02	1.00	0.58	0.84	0.64	1.25
6	MALE	3	100	90	97	20	1.95	1.30	2.00	2.74	2.19	.99
7	MALE	4	140	124	136	30	2.09	1.47	1.09	1.57	1.19	1.56
8	MALE	4	160	143	155	45	2.15	1.65	1.10	1.54	1.21	1.77
9	MALE	5	180	160	174	70	2.20	1.84	1.20	1.71	1.33	2.26
10	MALE	5	200	179	194	80	2.25	1.90	1.00	1.39	1.10	2.54
11	MALE	5	210	188	203	85	2.27	1.92	0.92	1.28	1.02	2.69
12	MALE	5	220	198	214	135	2.29	2.12	1.27	1.74	1.38	2.72
13	MALE	5	230	205	224	185	2.31	2.26	1.52	2.15	1.65	2.82
14	MALE	5	240	215	234	225	2.33	2.35	1.63	2.26	1.76	3.01
15	MALE	5	250	225	243	280	2.35	2.44	1.79	2.46	1.95	3.17
16	MALE	6	301	269	293	300	2.43	2.47	1.10	1.54	1.19	4.03
17	MALE	6	320	288	312	375	2.45	2.57	1.14	1.57	1.23	4.34
18	MALE	6	340	305	331	555	2.48	2.74	1.41	1.96	1.53	4.51
19	MALE	6	360	322	350	600	2.50	2.77	1.29	1.80	1.40	4.82
20	MALE	6	400	360	390	750	2.55	2.87	1.17	1.61	1.26	5.45
21	MALE	7	420	376	409	1025	2.57	3.01	1.38	1.93	1.50	5.65
22	MALE	7	440	395	429	1030	2.59	3.01	1.21	1.67	1.30	5.95
23	MALE	7	460	414	448	1010	2.61	3.00	1.04	1.42	1.12	6.11
24	MALE	7	480	433	468	1300	2.63	3.11	1.18	1.60	1.27	6.77
25	MALE	7	499	448	461	1350	2.65	3.12	1.09	1.50	1.38	6.75
26	MALE	6	406	360	394	800	2.55	2.90	1.20	1.71	1.31	5.61
27	MALE	6	402	355	390	750	2.54	2.87	1.15	1.68	1.26	5.44
28	MALE	7	506	450	493	1400	2.65	3.14	1.08	1.54	1.17	6.66
29	MALE	7	509	450	495	1490	2.65	3.17	1.13	1.64	1.23	6.96

TABLE 4A

SPEC NO	SEX	AGE	TOTAL LENGTH	STAND LENGTH	FORK LENGTH	WEIGHT	LOG S.L	LOG WEIGHT	KTL	KSL	KFL	SCALE RAD
30	MALE	8	620	550	602	2705	2.74	3.43	1.13	1.63	1.24	8.28
31	MALE	9	640	575	624	2910	2.75	3.46	1.11	1.53	1.20	8.98
32	MALE	9	660	593	643	3680	2.77	3.56	1.28	1.76	1.38	8.45
33	MALE	9	680	611	662	4053	2.78	3.60	1.29	1.78	1.40	10.00
34	MALE	9	700	628	682	4100	2.79	3.61	1.20	1.66	1.29	9.21
35	MALE	9	710	638	692	4200	2.80	3.62	1.17	1.62	1.27	9.17
36	MALE	9	730	656	711	5300	2.81	3.72	1.36	1.88	1.47	10.00
37	MALE	9	740	665	720	5300	2.82	3.72	1.31	1.80	1.42	11.49
38	MALE	9	750	674	730	4505	2.82	3.65	1.07	1.47	1.16	10.00
39	MALE	10	799	719	779	6500	2.85	3.81	1.27	1.75	1.37	12.00
40	MALE	11	920	826	897	9500	2.91	3.97	1.22	1.69	1.32	13.50
41	MALE	12	940	844	916	7000	2.92	3.84	0.84	1.16	0.91	12.50
42	MALE	12	960	862	935	7990	2.93	3.90	0.90	1.25	0.98	13.50
43	MALE	12	980	880	954	8000	2.94	3.90	0.85	1.17	0.92	13.00
44	MALE	12	999	897	972	9999	2.95	3.99	1.00	1.39	1.09	14.00
45	FEM	1	50	43	47	2	1.63	0.30	1.60	2.52	1.93	.32
46	FEM	3	79	70	76	7	1.84	0.84	1.42	2.04	1.59	.68
47	FEM	2	58	52	56	6	1.71	0.77	3.08	4.27	3.42	.47
48	FEM	3	100	89	97	25	1.94	1.39	2.50	3.55	2.74	1.07
49	FEM	4	118	104	114	10	2.01	1.00	0.61	0.89	0.67	1.17
50	FEM	4	142	126	138	34	2.09	1.53	1.19	1.70	1.29	1.65
51	FEM	4	155	139	151	45	2.14	1.65	1.21	1.68	1.31	1.80
52	FEM	5	180	160	174	71	2.20	1.85	1.22	1.73	1.35	2.36
53	FEM	5	200	179	195	86	2.25	1.93	1.08	1.50	1.16	2.42
54	FEM	5	210	187	203	88	2.27	1.94	0.95	1.35	1.05	2.78
55	FEM	5	210	189	203	135	2.27	2.12	1.46	2.00	1.61	2.61
56	FEM	5	230	205	224	190	2.31	2.27	1.56	2.21	1.69	2.87
57	FEM	5	245	220	240	225	2.34	2.35	1.53	2.11	1.63	3.12
58	FEM	5	252	227	245	290	2.35	2.46	1.81	2.48	1.97	3.11

TABLE 4A

SPEC NO	SEX	AGE	TOTAL LENGTH	STAND LENGTH	FORK LENGTH	WEIGHT	LOG S.L	LOG WEIGHT	KTL	KSL	KFL	SCALE RAD
59	FEM	6	301	269	294	300	2.43	2.47	1.10	1.54	1.18	3.98
60	FEM	6	320	288	313	380	2.45	2.57	1.16	1.59	1.24	4.48
61	FEM	6	340	305	332	559	2.48	2.74	1.42	1.97	1.53	4.56
62	FEM	6	360	322	351	600	2.50	2.77	1.29	1.80	1.39	4.65
63	FEM	6	400	360	389	755	2.55	2.87	1.18	1.62	1.28	5.29
64	FEM	7	509	450	496	1450	2.65	3.16	1.10	1.59	1.19	6.96
65	FEM	7	510	452	495	1500	2.65	3.17	1.13	1.62	1.24	7.00
66	FEM	8	590	530	575	2506	2.72	3.39	1.22	1.68	1.32	8.02
67	FEM	8	620	550	602	2780	2.74	3.44	1.17	1.67	1.27	8.30
68	FEM	9	640	575	624	3000	2.75	3.47	1.14	1.58	1.23	9.00
69	FEM	9	665	597	647	3720	2.77	3.57	1.26	1.75	1.37	8.51
70	FEM	9	670	603	652	4053	2.78	3.60	1.35	1.85	1.46	9.68
71	FEM	9	700	628	682	4150	2.79	3.61	1.21	1.68	1.31	9.21
72	FEM	9	710	638	692	4250	2.80	3.62	1.19	1.64	1.28	9.28
73	FEM	9	732	657	713	5310	2.81	3.72	1.35	1.87	1.46	9.83
74	FEM	9	740	665	720	5330	2.82	3.72	1.32	1.81	1.43	10.66
75	FEM	9	745	669	724	4510	2.82	3.65	1.09	1.51	1.19	9.83
76	FEM	10	795	717	777	6500	2.85	3.81	1.29	1.76	1.39	11.49
77	FEM	10	820	738	800	7010	2.86	3.84	1.27	1.74	1.37	11.70
78	FEM	10	840	756	819	7820	2.87	3.89	1.32	1.81	1.42	12.00
79	FEM	10	860	774	845	8723	2.88	3.94	1.37	1.88	1.45	13.79
80	FEM	11	880	792	858	8932	2.89	3.95	1.31	1.80	1.41	13.94
81	FEM	11	900	810	876	9222	2.90	3.96	1.27	1.74	1.37	13.21
82	FEM	11	920	826	897	9555	2.91	3.98	1.23	1.70	1.32	12.49
83	FEM	12	945	848	920	9999	2.92	3.99	1.18	1.64	1.28	13.23
84	FEM	12	963	864	937	7995	2.93	3.90	0.90	1.24	0.97	13.23
85	FEM	12	975	876	950	8000	2.94	3.90	0.86	1.19	0.93	13.47
86	FEM	12	990	891	965	9950	2.95	3.99	1.03	1.41	1.11	14.00
87	UNSEX	2	55	49	53	2	1.68	0.30	1.20	1.70	1.34	.42

TABLE 4A

SPEC NO	SEX	AGE	TOTAL LENGTH	STAND LENGTH	FORK LENGTH	WEIGHT	LOG S.L	LOG WEIGHT	KTL	KSL	KFL	SCALE RAD
88	UNSEX	2	75	68	73	6	1.83	0.77	1.42	1.91	1.54	.65
89	UNSEX	3	85	77	83	8	1.88	0.90	1.30	1.75	1.40	.79
90	UNSEX	3	95	86	92	8	1.93	0.90	0.93	1.26	1.03	.91
91	UNSEX	1	45	41	44	1	1.61	0.00	1.10	1.45	1.17	.44
92	UNSEX	1	45	41	44	1	1.61	0.00	1.10	1.45	1.17	.40
93	UNSEX	4	122	110	119	16	2.04	1.20	0.88	1.20	0.95	1.25

TABLE 4B

SPEC NO	SEX	AGE	TOTAL LENGTH	STAND LENGTH	FORK LENGTH	WEIGHT	LOG F.L	LOG WEIGHT	KTL	KSL	KFL	SCALE RAD
1	MALE	1	50	43	47	2	1.67	0.30	1.60	2.52	1.93	.30
2	MALE	3	80	71	77	7	1.88	0.84	1.37	1.96	1.53	.70
3	MALE	2	60	54	58	6	1.76	0.77	2.78	3.81	3.08	.51
4	MALE	2	60	53	57	8	1.75	0.90	3.70	5.37	4.32	.37
5	MALE	4	120	106	116	10	2.06	1.00	0.58	0.84	0.64	1.25
6	MALE	3	100	90	97	20	1.98	1.30	2.00	2.74	2.19	.99
7	MALE	4	140	124	136	30	2.13	1.47	1.09	1.57	1.19	1.56
8	MALE	4	160	143	155	45	2.19	1.65	1.10	1.54	1.21	1.77
9	MALE	5	180	160	174	70	2.24	1.84	1.20	1.71	1.33	2.26
10	MALE	5	200	179	194	80	2.28	1.90	1.00	1.39	1.10	2.54
11	MALE	5	210	188	203	85	2.30	1.92	0.92	1.28	1.02	2.69
12	MALE	5	220	198	214	135	2.33	2.12	1.27	1.74	1.38	2.72
13	MALE	5	230	205	224	185	2.35	2.26	1.52	2.15	1.65	2.82
14	MALE	5	240	215	234	225	2.36	2.35	1.63	2.26	1.76	3.01
15	MALE	5	250	225	243	280	2.38	2.44	1.79	2.46	1.95	3.17
16	MALE	6	301	269	293	300	2.46	2.47	1.10	1.54	1.19	4.03
17	MALE	6	320	288	312	375	2.49	2.57	1.14	1.57	1.23	4.34
18	MALE	6	340	305	331	555	2.51	2.74	1.41	1.96	1.53	4.51
19	MALE	6	360	322	350	600	2.54	2.77	1.29	1.80	1.40	4.82
20	MALE	6	400	360	390	750	2.59	2.87	1.17	1.61	1.26	5.45
21	MALE	7	420	376	409	1025	2.61	3.01	1.38	1.93	1.50	5.65
22	MALE	7	440	395	429	1030	2.63	3.01	1.21	1.67	1.30	5.95
23	MALE	7	460	414	448	1010	2.65	3.00	1.04	1.42	1.12	6.11
24	MALE	7	480	433	468	1300	2.66	3.11	1.18	1.60	1.27	6.77
25	MALE	7	499	448	461	1350	2.66	3.12	1.09	1.50	1.38	6.75
26	MALE	6	406	360	394	800	2.59	2.90	1.20	1.71	1.31	5.61
27	MALE	6	402	355	390	750	2.59	2.87	1.15	1.68	1.26	5.44
28	MALE	7	506	450	493	1400	2.69	3.14	1.08	1.54	1.17	6.66
29	MALE	7	509	450	495	1490	2.69	3.17	1.13	1.64	1.23	6.96

TABLE 4B

SPEC NO	SEX	AGE	TOTAL LENGTH	STAND LENGTH	FORK LENGTH	WEIGHT	LOG F.L	LOG WEIGHT	KTL	KSL	KFL	SCALE RAD
30	MALE	8	620	550	602	2705	2.77	3.43	1.13	1.63	1.24	8.28
31	MALE	9	640	575	624	2910	2.79	3.46	1.11	1.53	1.20	8.98
32	MALE	9	660	593	643	3680	2.80	3.56	1.28	1.76	1.38	8.45
33	MALE	9	680	611	662	4053	2.82	3.60	1.29	1.78	1.40	10.00
34	MALE	9	700	628	682	4100	2.83	3.61	1.20	1.66	1.29	9.21
35	MALE	9	710	638	692	4200	2.84	3.62	1.17	1.62	1.27	9.17
36	MALE	9	730	656	711	5300	2.85	3.72	1.36	1.88	1.47	10.00
37	MALE	9	740	665	720	5300	2.85	3.72	1.31	1.80	1.42	11.49
38	MALE	9	750	674	730	4505	2.86	3.65	1.07	1.47	1.16	10.00
39	MALE	10	799	719	779	6500	2.89	3.81	1.27	1.75	1.37	12.00
40	MALE	11	920	826	897	9500	2.95	3.97	1.22	1.69	1.32	13.50
41	MALE	12	940	844	916	7000	2.96	3.84	0.84	1.16	0.91	12.50
42	MALE	12	960	862	935	7990	2.97	3.90	0.90	1.25	0.98	13.50
43	MALE	12	980	880	954	8000	2.97	3.90	0.85	1.17	0.92	13.00
44	MALE	12	999	897	972	9999	2.98	3.99	1.00	1.39	1.09	14.00
45	FEM	1	50	43	47	2	1.67	0.30	1.60	2.52	1.93	.32
46	FEM	3	79	70	76	7	1.88	0.84	1.42	2.04	1.59	.68
47	FEM	2	58	52	56	6	1.74	0.77	3.08	4.27	3.42	.47
48	FEM	3	100	89	97	25	1.98	1.39	2.50	3.55	2.74	1.07
49	FEM	4	118	104	114	10	2.05	1.00	0.61	0.89	0.67	1.17
50	FEM	4	142	126	138	34	2.13	1.53	1.19	1.70	1.29	1.65
51	FEM	4	155	139	151	45	2.17	1.65	1.21	1.68	1.31	1.80
52	FEM	5	180	160	174	71	2.24	1.85	1.22	1.73	1.35	2.36
53	FEM	5	200	179	195	86	2.29	1.93	1.08	1.50	1.16	2.42
54	FEM	5	210	187	203	88	2.30	1.94	0.95	1.35	1.05	2.78
55	FEM	5	210	189	203	135	2.30	2.12	1.46	2.00	1.61	2.61
56	FEM	5	230	205	224	190	2.35	2.27	1.56	2.21	1.69	2.87
57	FEM	5	245	220	240	225	2.38	2.35	1.53	2.11	1.63	3.12
58	FEM	5	252	227	245	290	2.38	2.46	1.81	2.48	1.97	3.11

TABLE 4B

SPEC NO	SEX	AGE	TOTAL LENGTH	STAND LENGTH	FORK LENGTH	WEIGHT	LOG F.L	LOG WEIGHT	KTL	KSL	KFL	SCALE RAD
59	FEM	6	301	269	294	300	2.46	2.47	1.10	1.54	1.18	3.98
60	FEM	6	320	288	313	380	2.49	2.57	1.16	1.59	1.24	4.48
61	FEM	6	340	305	332	559	2.52	2.74	1.42	1.97	1.53	4.56
62	FEM	6	360	322	351	600	2.54	2.77	1.29	1.80	1.39	4.65
63	FEM	6	400	360	389	755	2.58	2.87	1.18	1.62	1.28	5.29
64	FEM	7	509	450	496	1450	2.69	3.16	1.10	1.59	1.19	6.96
65	FEM	7	510	452	495	1500	2.69	3.17	1.13	1.62	1.24	7.00
66	FEM	8	590	530	575	2506	2.75	3.39	1.22	1.68	1.32	8.02
67	FEM	8	620	550	602	2780	2.77	3.44	1.17	1.67	1.27	8.30
68	FEM	9	640	575	624	3000	2.79	3.47	1.14	1.58	1.23	9.00
69	FEM	9	665	597	647	3720	2.81	3.57	1.26	1.75	1.37	8.51
70	FEM	9	670	603	652	4053	2.81	3.60	1.35	1.85	1.46	9.68
71	FEM	9	700	628	682	4150	2.83	3.61	1.21	1.68	1.31	9.21
72	FEM	9	710	638	692	4250	2.84	3.62	1.19	1.64	1.28	9.28
73	FEM	9	732	657	713	5310	2.85	3.72	1.35	1.87	1.46	9.83
74	FEM	9	740	665	720	5330	2.85	3.72	1.32	1.81	1.43	10.66
75	FEM	9	745	669	724	4510	2.86	3.65	1.09	1.51	1.19	9.83
76	FEM	10	795	717	777	6500	2.89	3.81	1.29	1.76	1.39	11.49
77	FEM	10	820	738	800	7010	2.90	3.84	1.27	1.74	1.37	11.70
78	FEM	10	840	756	819	7820	2.91	3.89	1.32	1.81	1.42	12.00
79	FEM	10	860	774	845	8723	2.92	3.94	1.37	1.88	1.45	13.79
80	FEM	11	880	792	858	8932	2.93	3.95	1.31	1.80	1.41	13.94
81	FEM	11	900	810	876	9222	2.94	3.96	1.27	1.74	1.37	13.21
82	FEM	11	920	826	897	9555	2.95	3.98	1.23	1.70	1.32	12.49
83	FEM	12	945	848	920	9999	2.96	3.99	1.18	1.64	1.28	13.23
84	FEM	12	963	864	937	7995	2.97	3.90	0.90	1.24	0.97	13.23
85	FEM	12	975	876	950	8000	2.97	3.90	0.86	1.19	0.93	13.47
86	FEM	12	990	891	965	9950	2.98	3.99	1.03	1.41	1.11	14.00
87	UNSEX	2	55	49	53	2	1.72	0.30	1.20	1.70	1.34	.42

TABLE 4B

SPEC NC	SEX	AGE	TOTAL LENGTH	STAND LENGTH	FORK LENGTH	WEIGHT	LOG F.L	LOG WEIGHT	KTL	KSL	KFL	SCALE RAD
88	UNSEX	2	75	68	73	6	1.86	0.77	1.42	1.91	1.54	.65
89	UNSEX	3	85	77	83	8	1.91	0.90	1.30	1.75	1.40	.79
90	UNSEX	3	95	86	92	8	1.96	0.90	0.93	1.26	1.03	.91
91	UNSEX	1	45	41	44	1	1.64	0.00	1.10	1.45	1.17	.44
92	UNSEX	1	45	41	44	1	1.64	0.00	1.10	1.45	1.17	.40
93	UNSEX	4	122	110	119	16	2.07	1.20	0.88	1.20	0.95	1.25

TABLE 5

	TOTAL	MALE	FEMALE	UNSEX
SUM OF X	233.44	111.72	108.84	12.88
SUM OF Y	244.75	119.59	121.09	4.07
SUM OF XX	600.5048	289.1018	287.5398	23.8632
SUM OF YY	767.5323	368.6059	395.1835	3.7429
SUM OF XY	656.5260	318.9416	329.6255	7.9589
NO OF FISH	93	44	42	7
LOG C	4.64686-	4.42650-	4.59056-	4.69285-
N	2.89971	2.81378	2.88399	2.86646
CORRELATION COEFFICIENT	.995	.994	.995	.989

X VARIABLE IS LOG T.L
Y VARIABLE IS LOG WEIGHT

LOGW EQUALS LOGC PLUS NLOGL

TABLE 5A

	TOTAL	MALE	FEMALE	UNSEX
SUM OF X	228.91	109.57	106.76	12.58
SUM OF Y	244.75	119.59	121.09	4.07
SUM OF XX	578.0175	278.3095	276.9316	22.7764
SUM OF YY	767.5323	368.6059	395.1835	3.7429
SUM OF XY	644.6503	313.1311	323.7291	7.7901
NO OF FISH	93	44	42	7
LOG C	4.49692-	4.27749-	4.40248-	4.49720-
N	2.89618	2.80916	2.86619	2.82595
CORRELATION COEFFICIENT	.995	.994	.996	.988

X VARIABLE IS LOG S.L
Y VARIABLE IS LOG WEIGHT

LOGW EQUALS LOGC PLUS NLOGL

TABLE 5B

	TOTAL	MALE	FEMALE	UNSEX
SUM OF X	232.26	111.15	108.31	12.80
SUM OF Y	244.75	119.59	121.09	4.07
SUM OF XX	594.7102	286.2613	284.8771	23.5718
SUM OF YY	767.5323	368.6059	395.1835	3.7429
SUM OF XY	653.5811	317.4564	328.2095	7.9152
NO OF FISH	93	44	42	7
LOG C	4.58096-	4.35903-	4.50249-	4.62526-
N	2.88805	2.80151	2.86395	2.84741
CORRELATION COEFFICIENT	.995	.994	.995	.989

X VARIABLE IS LOG F.L
Y VARIABLE IS LOG WEIGHT

LOGW EQUALS LOGC PLUS NLOGL

TABLE 6

	TOTAL	MALE	FEMALE	UNSEX
SUM OF X	572.87	269.79	298.22	4.86
SUM OF Y	42162	19971	21669	522
SUM OF XX	5356.0617	2371.8925	2980.2020	3.9672
SUM OF YY	27677642	12501861	15131947	43834
SUM OF XY	384306.45	171925.12	211965.58	415.75
NO OF FISH	93	44	42	7
ALPHA	33.33440	31.20622	37.68967	12.12619
BETA	68.18633	68.93482	67.35307	89.94170
CORRELATION COEFFICIENT	.996	.996	.995	.989

X VARIABLE IS SCALE RAD
Y VARIABLE IS TOT LENGTH

Y EQUALS ALPHA PLUS BETA X

TABLE 6A

	TOTAL	MALE	FEMALE	UNSEX
SUM OF X	572.87	269.79	298.22	4.86
SUM OF Y	37809	17897	19440	472
SUM OF XX	5356.0617	2371.8925	2980.2020	3.9672
SUM OF YY	22294705	10058055	12200838	35812
SUM OF XY	344943.39	154217.46	190350.12	375.81
NO OF FISH	93	44	42	7
ALPHA	28.83252	26.71063	32.26075	11.10191
BETA	61.31858	61.98055	60.64331	81.12894
CORRELATION COEFFICIENT	.996	.996	.995	.990

X VARIABLE IS SCALE RAD
Y VARIABLE IS STD LENGTH

Y EQUALS ALPHA PLUS BETA X

TABLE 6B

	TOTAL	MALE	FEMALE	UNSEX
SUM OF X	572.87	269.79	298.22	4.86
SUM OF Y	41027	19411	21108	508
SUM OF XX	5356.0617	2371.8925	2980.2020	3.9672
SUM OF YY	26240699	11829283	14369892	41524
SUM OF XY	374221.65	167239.27	206577.67	404.71
NO OF FISH	93	44	42	7
ALPHA	31.55811	29.17736	35.89269	11.67173
BETA	66.49344	67.19002	65.72499	87.71562
CORRELATION COEFFICIENT	.996	.996	.995	.990

X VARIABLE IS SCALE RAD
Y VARIABLE IS FORK LENGTH

Y EQUALS ALPHA PLUS BETA X

TABLE 7

	TOTAL	MALE	FEMALE	UNSEX
SUM OF X	42162	19971	21669	522
SUM OF Y	37809	17897	19440	472
SUM OF XX	27677642	12501861	15131947	43834
SUM OF YY	22294705	10058055	12200838	35812
SUM OF XY	24840574	11213475	13587479	39620
NO OF FISH	93	44	42	7
ALPHA	1.08529-	1.31248-	1.57854-	.23310
BETA	.89915	.89904	.90019	.90109
CORRELATION COEFFICIENT	1.000	1.000	1.000	1.000

X VARIABLE IS TOT LENGTH
Y VARIABLE IS STD LENGTH

Y EQUALS ALPHA PLUS BETA X

TABLE 7A

	TOTAL	MALE	FEMALE	UNSEX
SUM OF X	42162	19971	21669	522
SUM OF Y	41027	19411	21108	508
SUM OF XX	27677642	12501861	15131947	43834
SUM OF YY	26240699	11829283	14369892	41524
SUM OF XY	26949211	12160598	14745950	42663
NO OF FISH	93	44	42	7
ALPHA	.88149-	1.22769-	.75214-	.07026-
BETA	.97502	.97466	.97557	.97412
CORRELATION COEFFICIENT	1.000	1.000	1.000	1.000

X VARIABLE IS TOT LENGTH
Y VARIABLE IS FORK LENGTH

Y EQUALS ALPHA PLUS BETA X

TABLE 7B

	TOTAL	MALE	FEMALE	UNSEX
SUM OF X	37809	17897	19440	472
SUM OF Y	41027	19411	21108	508
SUM OF XX	22294705	10058055	12200838	35812
SUM OF YY	26240699	11829283	14369892	41524
SUM OF XY	24186913	10907414	13240937	38562
NO OF FISH	93	44	42	7
ALPHA	.31352	.22018	.97734	.31426-
BETA	1.08434	1.08405	1.08369	1.08093
CORRELATION COEFFICIENT	1.000	1.000	1.000	1.000

X VARIABLE IS STD LENGTH
Y VARIABLE IS FORK LENGTH

Y EQUALS ALPHA PLUS BETA X

TABLE 8

	TOTAL		MALE		FEMALE		UNSEX	
TOTAL LENGTH	MEAN KTL	NO OF FISH	MEAN KTL	NO OF FISH	MEAN KTL	NO OF FISH	MEAN KTL	NO OF FISH
001-100	1.81	15	2.29	5	2.15	4	1.18	6
101-200	1.01	11	0.99	5	1.06	5	0.88	1
201-300	1.44	10	1.43	5	1.46	5		
301-400	1.23	10	1.22	5	1.23	5		
401-500	1.18	7	1.18	7				
501-600	1.13	5	1.11	2	1.15	3		
601-700	1.21	10	1.20	5	1.23	5		
701-800	1.24	10	1.24	5	1.25	5		
801-900	1.31	5			1.31	5		
901-999	1.00	10	0.96	5	1.04	5		

TABLE 8A

STANC LENGTH	TOTAL MEAN KSL	TOTAL NO OF FISH	MALE MEAN KSL	MALE NO OF FISH	FEMALE MEAN KSL	FEMALE NO OF FISH	UNSEX MEAN KSL	UNSEX NO OF FISH
001-100	2.55	15	3.28	5	3.10	4	1.59	6
101-200	1.47	15	1.44	7	1.55	7	1.20	1
201-300	1.99	10	2.00	5	1.99	5		
301-400	1.78	10	1.77	7	1.80	3		
401-500	1.56	7	1.54	5	1.61	2		
501-600	1.66	7	1.64	3	1.67	4		
601-700	1.71	12	1.70	6	1.73	6		
701-800	1.79	6	1.75	1	1.80	5		
801-900	1.42	11	1.33	5	1.49	6		
901-999								

TABLE 8B

FORK LENGTH	TOTAL MEAN KFL	TOTAL NO OF FISH	MALE MEAN KFL	MALE NO OF FISH	FEMALE MEAN KFL	FEMALE NO OF FISH	UNSEX MEAN KFL	UNSEX NO OF FISH
001-100	2.03	15	2.61	5	2.42	4	1.28	6
101-200	1.11	11	1.09	5	1.16	5	0.95	1
201-300	1.51	12	1.49	6	1.52	6		
301-400	1.34	10	1.33	6	1.36	4		
401-500	1.27	9	1.28	7	1.22	2		
501-600	1.32	1			1.32	1		
601-700	1.31	12	1.30	6	1.32	6		
701-800	1.36	9	1.36	4	1.37	5		
801-900	1.38	6	1.32	1	1.39	5		
901-999	1.02	8	0.98	4	1.07	4		

TABLE 9

AGE	TOTAL MEAN KTL	TOTAL NO OF FISH	MALE MEAN KTL	MALE NO OF FISH	FEMALE MEAN KTL	FEMALE NO OF FISH	UNSEX MEAN KTL	UNSEX NO OF FISH
1	1.35	4	1.60	1	1.60	1	1.10	2
2	2.44	5	3.24	2	3.08	1	1.31	2
3	1.59	6	1.69	2	1.96	2	1.12	2
4	0.95	7	0.92	3	1.00	3	0.88	1
5	1.35	14	1.33	7	1.37	7		
6	1.22	12	1.21	7	1.23	5		
7	1.15	9	1.16	7	1.12	2		
8	1.17	3	1.13	1	1.20	2		
9	1.23	16	1.22	8	1.24	8		
10	1.30	5	1.27	1	1.31	4		
11	1.26	4	1.22	1	1.27	3		
12	0.95	8	0.90	4	0.99	4		

TABLE 9A

AGE	TOTAL MEAN KSL	TOTAL NO OF FISH	MALE MEAN KSL	MALE NO OF FISH	FEMALE MEAN KSL	FEMALE NO OF FISH	UNSEX MEAN KSL	UNSEX NO OF FISH
1	1.99	4	2.52	1	2.52	1	1.45	2
2	3.41	5	4.59	2	4.27	1	1.81	2
3	2.22	6	2.35	2	2.80	2	1.51	2
4	1.35	7	1.32	3	1.42	3	1.20	1
5	1.88	14	1.86	7	1.91	7		
6	1.70	12	1.70	7	1.70	5		
7	1.61	9	1.61	7	1.61	2		
8	1.66	3	1.63	1	1.68	2		
9	1.70	16	1.69	8	1.71	8		
10	1.79	5	1.75	1	1.80	4		
11	1.73	4	1.69	1	1.75	3		
12	1.31	8	1.24	4	1.37	4		

TABLE 9B

AGE	TOTAL MEAN KFL	TOTAL NO OF FISH	MALE MEAN KFL	MALE NO OF FISH	FEMALE MEAN KFL	FEMALE NO OF FISH	UNSEX MEAN KFL	UNSEX NO OF FISH
1	1.55	4	1.93	1	1.93	1	1.17	2
2	2.74	5	3.70	2	3.42	1	1.44	2
3	1.75	6	1.86	2	2.17	2	1.22	2
4	1.04	7	1.01	3	1.09	3	0.95	1
5	1.48	14	1.46	7	1.49	7		
6	1.32	12	1.31	7	1.32	5		
7	1.27	9	1.28	7	1.22	2		
8	1.28	3	1.24	1	1.30	2		
9	1.33	16	1.32	8	1.34	8		
10	1.40	5	1.37	1	1.41	4		
11	1.36	4	1.32	1	1.37	3		
12	1.02	8	0.98	4	1.07	4		

TABLE 10

SPEC NO	SEX	AGE	TOTAL LENGTH	CALCULATED T.L AT AGE 1	2	3	4	5	6	7	8	9	10	11	12	SCL MAG
1	MALE	1	50	44												99
2	MALE	3	80	57	64	71										99
3	MALE	2	60	49	57											99
4	MALE	2	60	48	54											99
5	MALE	4	120	58	68	89	110									99
6	MALE	3	100	59	70	87										99
7	MALE	4	140	57	71	109	130									99
8	MALE	4	160	58	74	119	148									99
9	MALE	5	180	55	69	88	117	164								99
10	MALE	5	200	55	69	93	132	185								99
11	MALE	5	210	56	70	90	120	179								99
12	MALE	5	220	56	72	96	143	198								99
13	MALE	5	230	56	71	104	141	208								99
14	MALE	5	240	56	71	116	146	219								99
15	MALE	5	250	55	75	122	163	235								99
16	MALE	6	301	53	67	102	133	200	266							99
17	MALE	6	320	54	67	102	139	211	291							99
18	MALE	6	340	55	69	104	146	228	306							99
19	MALE	6	360	55	69	105	148	231	326							99
20	MALE	6	400	54	69	107	155	236	378							99
21	MALE	7	420	54	68	103	136	201	274	377						99
22	MALE	7	440	54	69	103	140	205	294	397						99
23	MALE	7	460	54	70	105	144	215	385	426						99
24	MALE	7	480	53	69	103	139	212	399	431						99
25	MALE	7	499	54	70	109	150	227	401	453						99
26	MALE	6	406	53	70	107	149	228	366							99
27	MALE	6	402	54	70	109	152	232	362							99
28	MALE	7	506	54	71	112	156	245	396	494						47

TABLE 10

SPEC NO	SEX	AGE	TOTAL LENGTH	CALCULATED T.L AT AGE 1	2	3	4	5	6	7	8	9	10	11	12	SCL MAG
29	MALE	7	509	54	70	109	151	234	385	492						47
30	MALE	8	620	54	70	110	152	237	403	514	591					47
31	MALE	9	640	52	69	107	140	213	371	450	529	608				47
32	MALE	9	660	54	73	114	150	226	404	483	565	636				47
33	MALE	9	680	51	66	105	149	226	377	449	515	654				47
34	MALE	9	700	53	70	110	153	233	401	472	561	691				47
35	MALE	9	710	55	73	110	154	237	407	473	570	702				47
36	MALE	9	730	53	70	109	149	232	401	471	604	708				47
37	MALE	9	740	50	70	109	147	223	374	515	583	714				47
38	MALE	9	750	69	105	141	177	213	392	463	607	714				2
39	MALE	10	799	65	97	129	161	193	352	416	544	639	735			2
40	MALE	11	920	66	99	132	165	198	362	427	559	657	756	854		2
41	MALE	12	940	70	106	142	178	215	396	469	577	686	795	831	867	2
42	MALE	12	960	68	102	136	171	205	377	445	548	685	788	857	891	2
43	MALE	12	980	70	106	143	179	215	397	470	616	725	762	834	944	2
44	MALE	12	999	68	102	137	171	206	378	447	585	689	758	861	965	2
45	FEM	1	50	47												99
46	FEM	3	79	57	65	73										99
47	FEM	2	58	51	55											99
48	FEM	3	100	56	64	82										99
49	FEM	4	118	57	68	84	98									99
50	FEM	4	142	57	67	93	113									99
51	FEM	4	155	57	70	108	128									99
52	FEM	5	180	54	67	90	121	156								99
53	FEM	5	200	56	70	96	131	169								99
54	FEM	5	210	54	68	94	136	175								99
55	FEM	5	210	55	70	95	136	181								99
56	FEM	5	230	55	71	102	137	192								99

TABLE 10

SPEC NO	SEX	AGE	TOTAL LENGTH	CALCULATED T.L AT AGE 1	2	3	4	5	6	7	8	9	10	11	12	SCL MAG
57	FEM	5	245	55	70	109	143	217								99
58	FEM	5	252	55	72	111	149	220								99
59	FEM	6	301	54	69	88	135	202	263							99
60	FEM	6	320	53	68	88	130	200	277							99
61	FEM	6	340	54	69	94	141	212	304							99
62	FEM	6	360	55	71	104	150	224	317							99
63	FEM	6	400	54	70	110	152	236	361							99
64	FEM	7	509	54	70	94	132	201	310	470						47
65	FEM	7	510	54	70	97	139	207	309	475						47
66	FEM	8	590	53	70	98	137	224	318	428	558					47
67	FEM	8	620	53	71	103	142	232	331	449	582					47
68	FEM	9	640	51	69	95	138	208	324	451	522	611				47
69	FEM	9	665	52	73	98	147	217	344	485	564	632				47
70	FEM	9	670	50	68	94	135	207	358	448	524	632				47
71	FEM	9	700	53	72	98	146	223	337	481	566	672				47
72	FEM	9	710	54	71	99	147	226	338	485	572	677				47
73	FEM	9	732	53	73	98	144	222	340	481	560	699				47
74	FEM	9	740	50	70	98	141	227	362	514	607	699				47
75	FEM	9	745	52	72	100	146	220	346	497	579	711				47
76	FEM	10	795	50	67	91	139	207	315	454	530	654	760			47
77	FEM	10	820	50	68	92	141	209	319	467	537	670	777			47
78	FEM	10	840	51	69	95	142	215	339	480	558	677	806			47
79	FEM	10	860	49	67	89	130	200	319	470	533	646	818			47
80	FEM	11	880	48	66	90	128	204	323	479	553	629	770	827		47
81	FEM	11	900	49	68	91	135	209	342	499	573	677	801	876		47
82	FEM	11	920	50	70	92	139	216	360	523	594	699	811	885		47
83	FEM	12	945	48	70	90	136	209	350	510	590	680	817	889	923	47
84	FEM	12	963	47	66	95	135	223	370	510	582	709	775	843	938	47

TABLE 10

SPEC NO	SEX	AGE	TOTAL LENGTH	CALCULATED T.L AT AGE 1	2	3	4	5	6	7	8	9	10	11	12	SCL MAG
85	FEM	12	975	47	65	97	142	237	375	536	628	737	829	904	963	47
86	FEM	12	990	102	170	238	307	375	443	512	580	717	785	853	922	1
87	UNSEX	2	55	44	52											99
88	UNSEX	2	75	53	63											99
89	UNSEX	3	85	47	65	75										47
90	UNSEX	3	95	56	68	88										99
91	UNSEX	1	45	41												99
92	UNSEX	1	45	42												99
93	UNSEX	4	122	56	65	83	105									99

TABLE 10A

SPEC NO	SEX	AGE	STAND LENGTH	CALCULATED S.L AT AGE 1	2	3	4	5	6	7	8	9	10	11	12	SCL MAG
1	MALE	1	43	38												99
2	MALE	3	71	50	56	62										99
3	MALE	2	54	44	51											99
4	MALE	2	53	42	47											99
5	MALE	4	106	51	59	79	97									99
6	MALE	3	90	52	63	78										99
7	MALE	4	124	50	62	96	115									99
8	MALE	4	143	51	65	106	133									99
9	MALE	5	160	48	60	78	104	145								99
10	MALE	5	179	49	61	83	118	166								99
11	MALE	5	188	49	62	80	107	160								99
12	MALE	5	198	49	64	85	128	178								99
13	MALE	5	205	49	63	92	125	185								99
14	MALE	5	215	49	63	103	131	196								99
15	MALE	5	225	49	66	109	146	211								99
16	MALE	6	269	47	59	90	119	178	238							99
17	MALE	6	288	48	60	91	124	190	262							99
18	MALE	6	305	48	61	93	130	204	275							99
19	MALE	6	322	48	61	93	132	206	291							99
20	MALE	6	360	48	61	96	139	212	340							99
21	MALE	7	376	47	60	92	121	180	245	337						99
22	MALE	7	395	47	61	92	125	183	263	356						99
23	MALE	7	414	48	62	94	129	193	346	383						99
24	MALE	7	433	47	61	92	125	190	359	389						99
25	MALE	7	448	48	62	97	134	203	360	407						99
26	MALE	6	360	46	61	94	131	202	324							99
27	MALE	6	355	47	62	95	134	204	319							99
28	MALE	7	450	48	62	99	138	217	352	439						47

TABLE 10A

SPEC NO	SEX	AGE	STAND LENGTH	CALCULATED S.L AT AGE 1	2	3	4	5	6	7	8	9	10	11	12	SCL MAG
29	MALE	7	450	47	61	96	133	207	341	435						47
30	MALE	8	550	48	61	97	135	210	357	456	525					47
31	MALE	9	575	46	61	95	125	191	333	404	475	547				47
32	MALE	9	593	47	64	101	134	202	363	434	508	572				47
33	MALE	9	611	45	59	93	133	202	338	403	462	587				47
34	MALE	9	628	47	62	98	137	209	360	423	503	620				47
35	MALE	9	638	49	64	98	138	213	365	425	512	631				47
36	MALE	9	656	46	62	97	133	208	360	422	543	636				47
37	MALE	9	665	44	62	97	131	200	335	462	524	641				47
38	MALE	9	674	61	93	126	158	190	351	416	545	642				2
39	MALE	10	719	58	86	115	144	173	316	374	489	575	661			2
40	MALE	11	826	58	88	117	147	176	324	383	501	590	678	767		2
41	MALE	12	844	61	94	127	159	192	355	420	518	616	714	746	779	2
42	MALE	12	862	60	91	121	152	183	337	399	492	615	708	769	800	2
43	MALE	12	880	62	94	127	160	193	356	422	553	651	684	749	847	2
44	MALE	12	897	60	91	122	153	184	339	401	525	618	680	773	866	2
45	FEM	1	43	40												99
46	FEM	3	70	50	58	64										99
47	FEM	2	52	45	49											99
48	FEM	3	89	49	57	73										99
49	FEM	4	104	50	59	74	87									99
50	FEM	4	126	50	59	82	100									99
51	FEM	4	139	50	62	96	114									99
52	FEM	5	160	47	59	79	107	138								99
53	FEM	5	179	49	62	85	116	151								99
54	FEM	5	187	47	60	83	121	155								99
55	FEM	5	189	49	62	85	122	162								99
56	FEM	5	205	48	63	90	122	171								99

TABLE 10A

SPEC NO	SEX	AGE	STAND LENGTH	CALCULATED S.L AT AGE 1	2	3	4	5	6	7	8	9	10	11	12	SCL MAG
57	FEM	5	220	48	62	97	128	195								99
58	FEM	5	227	49	64	100	134	198								99
59	FEM	6	269	47	61	78	120	180	235							99
60	FEM	6	288	47	60	78	116	179	249							99
61	FEM	6	305	47	61	83	126	190	273							99
62	FEM	6	322	48	63	93	133	200	283							99
63	FEM	6	360	48	62	98	136	211	325							99
64	FEM	7	450	47	61	83	116	177	274	415						47
65	FEM	7	452	47	61	85	123	183	273	421						47
66	FEM	8	530	46	62	87	122	200	285	384	501					47
67	FEM	8	550	46	62	90	125	205	293	398	517					47
68	FEM	9	575	44	61	84	123	186	291	405	469	549				47
69	FEM	9	597	46	64	87	131	194	309	435	506	567				47
70	FEM	9	603	44	60	83	121	185	322	402	472	569				47
71	FEM	9	628	47	63	87	130	199	301	432	508	603				47
72	FEM	9	638	47	62	88	131	202	303	435	514	609				47
73	FEM	9	657	47	64	87	128	199	305	431	502	627				47
74	FEM	9	665	44	62	87	125	203	325	462	546	628				47
75	FEM	9	669	45	63	88	130	196	310	446	519	639				47
76	FEM	10	717	44	59	81	124	186	284	409	477	590	685			47
77	FEM	10	738	44	60	82	126	187	287	420	483	603	699			47
78	FEM	10	756	44	61	84	127	193	305	431	502	609	725			47
79	FEM	10	774	43	59	79	116	179	286	422	480	581	736			47
80	FEM	11	792	42	58	80	114	183	290	431	497	566	693	744		47
81	FEM	11	810	43	60	80	121	187	307	449	516	609	721	789		47
82	FEM	11	826	44	61	82	124	193	322	469	533	628	728	795		47
83	FEM	12	848	42	62	80	121	187	313	457	529	610	733	798	828	47
84	FEM	12	864	41	58	84	120	199	331	457	522	636	695	757	841	47

TABLE 10A

SPEC NO	SEX	AGE	STAND LENGTH	CALCULATED S.L AT AGE 1	2	3	4	5	6	7	8	9	10	11	12	SCL MAG
85	FEM	12	876	41	57	86	127	212	337	481	564	662	745	812	865	47
86	FEM	12	891	90	152	214	275	337	398	460	522	645	706	768	829	1
87	UNSEX	2	49	38	46											99
88	UNSEX	2	68	47	56											99
89	UNSEX	3	77	42	59	68										47
90	UNSEX	3	86	50	61	80										99
91	UNSEX	1	41	37												99
92	UNSEX	1	41	38												99
93	UNSEX	4	110	49	58	75	94									99

TABLE 10B

SPEC NC	SEX	AGE	FORK LENGTH	CALCULATED F.L AT AGE 1	2	3	4	5	6	7	8	9	10	11	12	SCL MAG
1	MALE	1	47	42												99
2	MALE	3	77	55	61	68										99
3	MALE	2	58	47	55											99
4	MALE	2	57	45	51											99
5	MALE	4	116	56	65	86	106									99
6	MALE	3	97	56	68	84										99
7	MALE	4	136	55	68	105	126									99
8	MALE	4	155	56	71	115	144									99
9	MALE	5	174	53	66	85	113	158								99
10	MALE	5	194	53	67	90	128	180								99
11	MALE	5	203	53	67	86	116	173								99
12	MALE	5	214	53	70	93	139	192								99
13	MALE	5	224	54	69	101	137	203								99
14	MALE	5	234	53	69	112	142	214								99
15	MALE	5	243	53	72	118	158	228								99
16	MALE	6	293	51	64	98	129	194	259							99
17	MALE	6	312	52	65	99	135	206	284							99
18	MALE	6	331	52	66	101	142	222	298							99
19	MALE	6	350	52	66	101	144	224	317							99
20	MALE	6	390	52	67	104	150	229	368							99
21	MALE	7	409	52	65	100	131	196	267	367						99
22	MALE	7	429	52	66	100	135	199	286	387						99
23	MALE	7	448	52	67	102	140	209	374	415						99
24	MALE	7	468	51	66	100	135	206	389	420						99
25	MALE	7	461	51	66	102	140	210	371	419						99
26	MALE	6	394	50	67	103	144	221	355							99
27	MALE	6	390	52	67	105	147	224	351							99
28	MALE	7	493	52	68	108	151	238	385	481						47

TABLE 10B

SPEC NO	SEX	AGE	FORK LENGTH	CALCULATED F.L AT AGE 1	2	3	4	5	6	7	8	9	10	11	12	SCL MAG
29	MALE	7	495	51	67	105	146	227	375	478						47
30	MALE	8	602	52	67	106	147	230	391	499	574					47
31	MALE	9	624	50	67	103	135	207	361	439	516	593				47
32	MALE	9	643	52	70	110	146	219	393	471	551	620				47
33	MALE	9	662	49	64	101	144	219	367	437	501	637				47
34	MALE	9	682	51	68	107	149	227	391	460	547	673				47
35	MALE	9	692	53	70	107	150	231	396	461	556	684				47
36	MALE	9	711	50	68	105	144	225	390	458	588	689				47
37	MALE	9	720	48	67	106	142	216	363	501	567	695				47
38	MALE	9	730	66	101	136	171	206	381	451	590	695				2
39	MALE	10	779	63	94	125	156	187	343	405	530	623	717			2
40	MALE	11	897	64	96	128	160	192	352	416	544	641	737	833		2
41	MALE	12	916	67	102	138	173	208	385	456	562	668	774	810	845	2
42	MALE	12	935	65	98	132	165	199	366	433	533	667	768	835	868	2
43	MALE	12	954	67	103	138	173	209	386	457	599	706	741	812	919	2
44	MALE	12	972	65	99	132	166	199	367	435	569	670	737	838	938	2
45	FEM	1	47	44												99
46	FEM	3	76	55	63	70										99
47	FEM	2	56	49	53											99
48	FEM	3	97	54	62	80										99
49	FEM	4	114	55	65	81	95									99
50	FEM	4	138	54	65	90	109									99
51	FEM	4	151	55	67	105	124									99
52	FEM	5	174	52	64	86	117	150								99
53	FEM	5	195	53	68	93	127	164								99
54	FEM	5	203	52	65	91	131	169								99
55	FEM	5	203	53	67	91	131	174								99
56	FEM	5	224	53	69	99	133	187								99

TABLE 10B

SPEC NO	SEX	AGE	FORK LENGTH	CALCULATED F.L AT AGE 1	2	3	4	5	6	7	8	9	10	11	12	SCL MAG
57	FEM	5	240	52	68	106	139	212								99
58	FEM	5	245	53	69	108	145	214								99
59	FEM	6	294	52	66	85	131	197	257							99
60	FEM	6	313	51	65	85	126	195	271							99
61	FEM	6	332	52	67	91	137	207	297							99
62	FEM	6	351	52	68	101	145	218	309							99
63	FEM	6	389	52	68	107	148	229	351							99
64	FEM	7	496	51	67	91	128	195	301	458						47
65	FEM	7	495	51	67	94	134	201	299	461						47
66	FEM	8	575	50	68	95	132	218	310	416	543					47
67	FEM	8	602	51	68	99	137	225	321	435	565					47
68	FEM	9	624	48	67	92	134	202	316	439	509	596				47
69	FEM	9	647	50	70	95	142	210	335	472	549	615				47
70	FEM	9	652	48	66	90	131	201	348	435	510	615				47
71	FEM	9	682	51	69	95	141	216	327	469	551	655				47
72	FEM	9	692	51	68	95	142	219	328	472	557	660				47
73	FEM	9	713	51	70	95	139	216	331	468	545	681				47
74	FEM	9	720	48	67	95	136	220	352	500	591	680				47
75	FEM	9	724	50	69	96	141	213	336	483	562	691				47
76	FEM	10	777	48	65	88	135	201	308	443	517	639	742			47
77	FEM	10	800	48	65	89	136	203	311	455	523	653	758			47
78	FEM	10	819	48	66	92	138	209	330	467	544	660	785			47
79	FEM	10	845	47	64	87	127	196	313	461	524	634	804			47
80	FEM	11	858	45	63	87	124	198	314	467	539	613	751	806		47
81	FEM	11	876	47	66	87	131	203	332	486	558	658	779	853		47
82	FEM	11	897	48	67	89	135	210	350	509	579	682	791	863		47
83	FEM	12	920	46	67	87	132	203	340	496	574	661	796	866	899	47
84	FEM	12	937	45	64	91	131	216	359	496	566	690	754	821	912	47

TABLE 10B

SPEC NO	SEX	AGE	FORK LENGTH	CALCULATED F.L AT AGE 1	2	3	4	5	6	7	8	9	10	11	12	SCL MAG
85	FEM	12	950	45	62	94	137	230	365	522	612	718	808	880	938	47
86	FEM	12	965	98	165	232	298	365	432	498	565	698	765	832	898	1
87	UNSEX	2	53	42	50											99
88	UNSEX	2	73	51	61											99
89	UNSEX	3	83	45	64	73										47
90	UNSEX	3	92	54	65	85										99
91	UNSEX	1	44	40												99
92	UNSEX	1	44	41												99
93	UNSEX	4	119	53	63	81	102									99

TABLE 11

AGE	NC CF FISH	MEAN T.L	MEAN CALCULATED T.L AT AGE											
			1	2	3	4	5	6	7	8	9	10	11	12
1	4	48	44											
2	5	62	49	56										
3	6	90	55	66	79									
4	7	137	57	69	98	119								
5	14	218	55	70	100	137	193							
6	12	354	54	69	102	144	220	318						
7	9	481	54	70	104	143	216	350	446					
8	3	610	53	70	104	144	231	351	464	577				
9	16	701	53	73	105	148	222	367	476	564	673			
10	5	823	53	74	99	143	205	329	457	540	657	779		
11	4	905	53	76	101	142	207	347	482	570	666	785	861	
12	8	969	65	98	135	177	236	386	487	588	704	789	859	927
MEAN			54	72	104	144	215	351	470	568	677	785	860	927

TABLE 11A

AGE	NC CF FISH	MEAN S.L	MEAN CALCULATED S.L AT AGE											
			1	2	3	4	5	6	7	8	9	10	11	12
1	4	42	38											
2	5	55	43	50										
3	6	81	49	59	71									
4	7	122	50	61	87	106								
5	14	196	49	62	89	122	172							
6	12	317	47	61	90	128	196	285						
7	9	430	47	61	92	127	193	313	398					
8	3	543	47	62	91	127	205	312	413	514				
9	16	630	47	64	94	132	199	329	427	507	604			
10	5	741	47	65	88	127	184	296	411	486	592	701		
11	4	814	47	67	90	127	185	311	433	512	598	705	774	
12	8	870	57	87	120	158	211	346	437	528	632	708	772	832
MEAN			48	64	92	129	192	314	421	510	608	705	772	832

TABLE 11B

AGE	NO OF FISH	MEAN F.L	MEAN CALCULATED F.L AT AGE											
			1	2	3	4	5	6	7	8	9	10	11	12
1	4	46	42											
2	5	59	47	54										
3	6	87	53	64	77									
4	7	133	55	66	95	115								
5	14	212	53	68	97	133	187							
6	12	345	52	66	98	140	214	310						
7	9	466	51	67	100	138	209	339	432					
8	3	593	51	68	100	139	224	341	450	561				
9	16	682	51	70	102	143	215	357	464	549	655			
10	5	804	51	71	96	138	199	321	446	528	642	761		
11	4	882	51	73	98	138	201	337	470	555	649	765	839	
12	8	944	62	95	131	172	229	375	474	573	685	768	837	902
MEAN			52	70	100	140	209	341	457	553	659	765	837	902

TABLE 12

AGE	NO OF FISH	MEAN T.L	MEAN CALCULATED T.L AT AGE											
			1	2	3	4	5	6	7	8	9	10	11	12
1	1	50	44											
2	2	60	49	56										
3	2	90	58	67	79									
4	3	140	58	71	106	129								
5	7	219	56	71	101	137	198							
6	7	361	54	69	105	146	224	328						
7	7	473	54	70	106	145	220	362	439					
8	1	620	54	70	110	152	237	403	514	591				
9	8	701	55	75	113	152	225	391	472	567	678			
10	1	799	65	97	129	161	193	352	416	544	639	735		
11	1	920	66	99	132	165	198	362	427	559	657	756	854	
12	4	970	69	104	140	175	210	387	458	582	696	776	846	917
MEAN			56	74	110	148	216	366	456	570	679	766	847	917

TABLE 12A

AGE	NO OF FISH	MEAN S.L	MEAN CALCULATED S.L AT AGE 1	2	3	4	5	6	7	8	9	10	11	12
1	1	43	38											
2	2	54	43	49										
3	2	81	51	60	70									
4	3	124	51	62	94	115								
5	7	196	49	63	90	123	177							
6	7	323	47	61	93	130	199	293						
7	7	424	47	61	95	129	196	324	392					
8	1	550	48	61	97	135	210	357	456	525				
9	8	630	48	66	101	136	202	351	424	509	610			
10	1	719	58	86	115	144	173	316	374	489	575	661		
11	1	826	58	88	117	147	176	324	383	501	590	678	767	
12	4	871	61	93	124	156	188	347	411	522	625	697	759	823
MEAN			49	66	97	132	193	328	409	512	610	688	761	823

TABLE 12B

AGE	NO OF FISH	MEAN F.L	MEAN CALCULATED F.L AT AGE											
			1	2	3	4	5	6	7	8	9	10	11	12
1	1	47	42											
2	2	58	46	53										
3	2	87	56	65	76									
4	3	136	56	68	102	125								
5	7	212	53	69	98	133	193							
6	7	351	52	66	102	142	217	319						
7	7	458	52	66	102	140	212	350	424					
8	1	602	52	67	106	147	230	391	499	574				
9	8	683	52	72	109	148	219	380	460	552	661			
10	1	779	63	94	125	156	187	343	405	530	623	717		
11	1	897	64	96	128	160	192	352	416	544	641	737	833	
12	4	944	66	101	135	169	204	376	445	566	678	755	824	893
MEAN			54	72	106	144	209	356	443	555	662	746	826	893

TABLE 13

AGE	NO OF FISH	MEAN T.L	MEAN CALCULATED T.L AT AGE											
			1	2	3	4	5	6	7	8	9	10	11	12
1	1	50	47											
2	1	58	51	55										
3	2	90	57	65	78									
4	3	138	57	68	95	113								
5	7	218	55	70	100	136	187							
6	5	344	54	69	97	142	215	304						
7	2	510	54	70	96	136	204	310	473					
8	2	605	53	71	101	140	228	325	439	570				
9	8	700	52	71	98	143	219	344	480	562	667			
10	4	829	50	68	92	138	208	323	468	540	662	790		
11	3	900	49	68	91	134	210	342	500	573	668	794	863	
12	4	968	61	93	130	180	261	385	517	595	711	802	872	937
MEAN			54	71	99	141	214	336	483	566	675	795	868	937

TABLE 13A

AGE	NO OF FISH	MEAN S.L	MEAN CALCULATED S.L AT AGE											
			1	2	3	4	5	6	7	8	9	10	11	12
1	1	43	40											
2	1	52	45	49										
3	2	80	50	58	69									
4	3	123	50	60	84	100								
5	7	195	48	62	88	121	167							
6	5	309	47	61	86	126	192	273						
7	2	451	47	61	84	120	180	274	418					
8	2	540	46	62	89	124	203	289	391	509				
9	8	629	46	62	86	127	196	308	431	505	599			
10	4	746	44	60	82	123	186	291	421	486	596	711		
11	3	809	43	60	81	120	188	306	450	515	601	714	776	
12	4	870	54	82	116	161	234	345	464	534	638	720	784	841
MEAN			47	63	88	126	191	301	433	509	607	715	780	841

TABLE 13B

AGE	NO OF FISH	MEAN F.L	MEAN CALCULATED F.L AT AGE											
			1	2	3	4	5	6	7	8	9	10	11	12
1	1	47	44											
2	1	56	49	53										
3	2	87	55	63	75									
4	3	134	55	66	92	109								
5	7	212	53	67	96	132	181							
6	5	336	52	67	94	137	209	297						
7	2	496	51	67	93	131	198	300	460					
8	2	589	51	68	97	135	222	316	426	554				
9	8	682	50	68	94	138	212	334	467	547	649			
10	4	810	48	65	89	134	202	316	457	527	647	772		
11	3	877	47	65	88	130	204	332	487	559	651	774	841	
12	4	943	59	90	126	175	254	374	503	579	692	781	850	912
MEAN			51	69	96	137	208	327	470	552	658	776	846	912

TABLE 14

AGE	NO OF FISH	MEAN T.L	MEAN CALCULATED T.L AT AGE											
			1	2	3	4	5	6	7	8	9	10	11	12
1	2	45	42											
2	2	65	49	58										
3	2	90	52	67	82									
4	1	122	56	65	83	105								
5														
6														
7														
8														
9														
10														
11														
12														
MEAN			48	63	82	105								

TABLE 14A

AGE	NO OF FISH	MEAN S.L	MEAN CALCULATED S.L AT AGE 1	2	3	4	5	6	7	8	9	10	11	12
1	2	41	38											
2	2	59	43	51										
3	2	82	46	60	74									
4	1	110	49	58	75	94								
5														
6														
7														
8														
9														
10														
11														
12														
MEAN			43	56	74	94								

TABLE 14B

AGE	NO OF FISH	MEAN F.L	MEAN CALCULATED F.L AT AGE 1	2	3	4	5	6	7	8	9	10	11	12
1	2	44	41											
2	2	63	47	56										
3	2	88	50	65	79									
4	1	119	53	63	81	102								
5														
6														
7														
8														
9														
10														
11														
12														
MEAN			47	61	80	102								

APPENDIX B

PROGRAM 00001

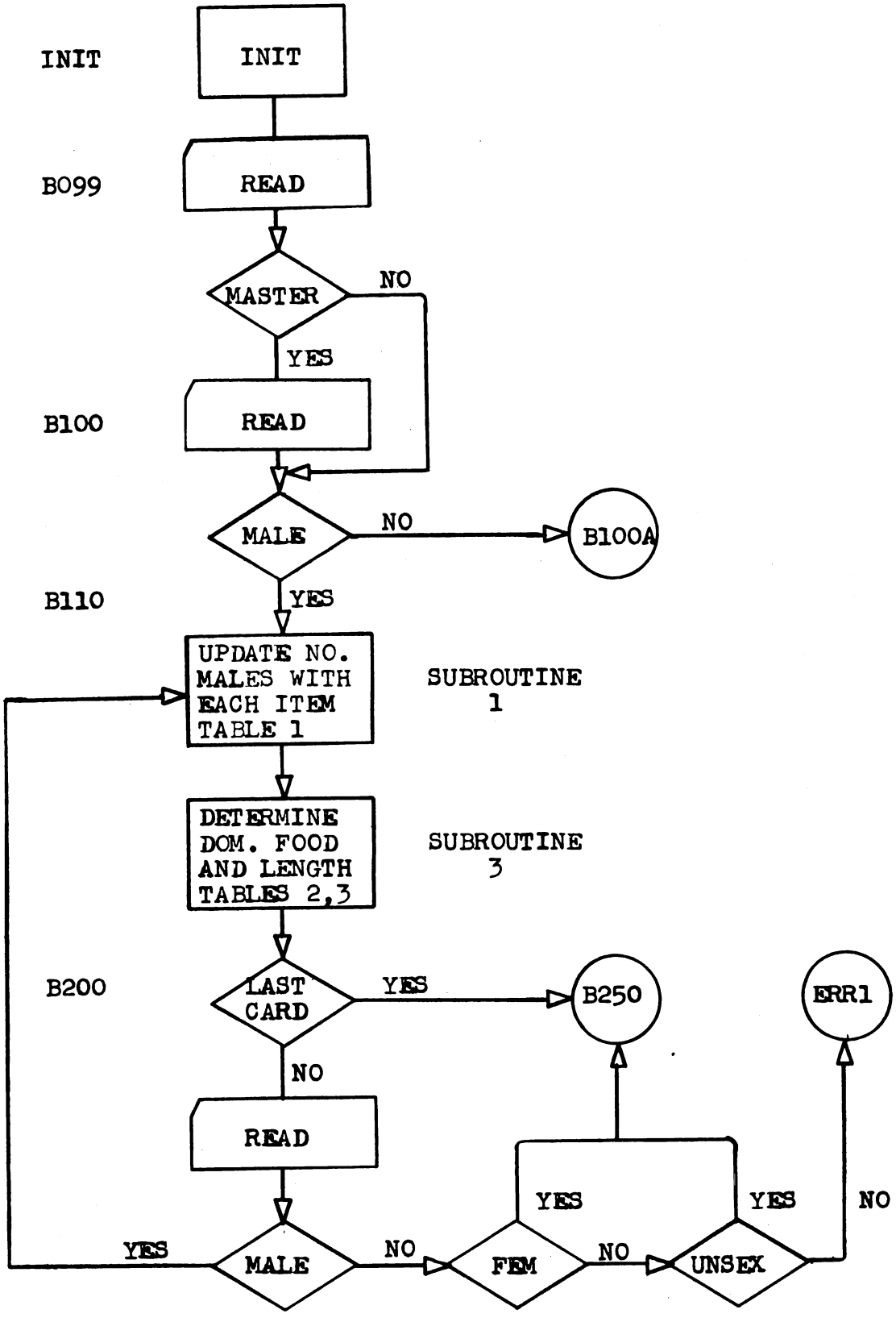

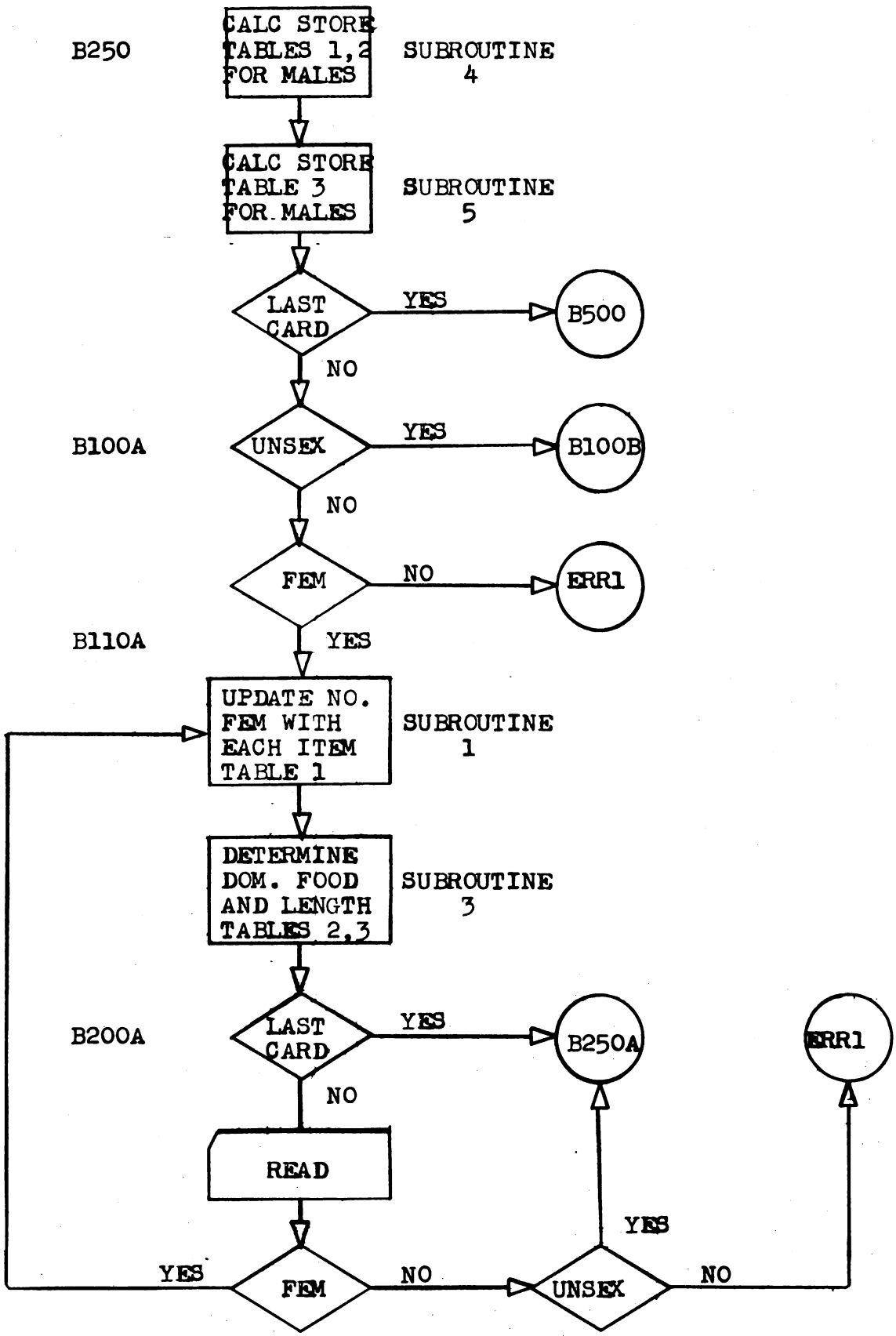
B250
CALC STORE TABLES 1,2 FOR MALES
SUBROUTINE 4
CALC STORE TABLE 3 FOR MALES
SUBROUTINE 5
LAST CARD
YES
B500
NO
B100A
UNSEX
YES
B100B
NO
FEM
NO
ERR1
B110A
YES
UPDATE NO. FEM WITH EACH ITEM TABLE 1
SUBROUTINE 1
DETERMINE DOM. FOOD AND LENGTH TABLES 2,3
SUBROUTINE 3
B200A
LAST CARD
YES
B250A
ERR1
NO
READ
YES
YES
FEM
NO
UNSEX
NO

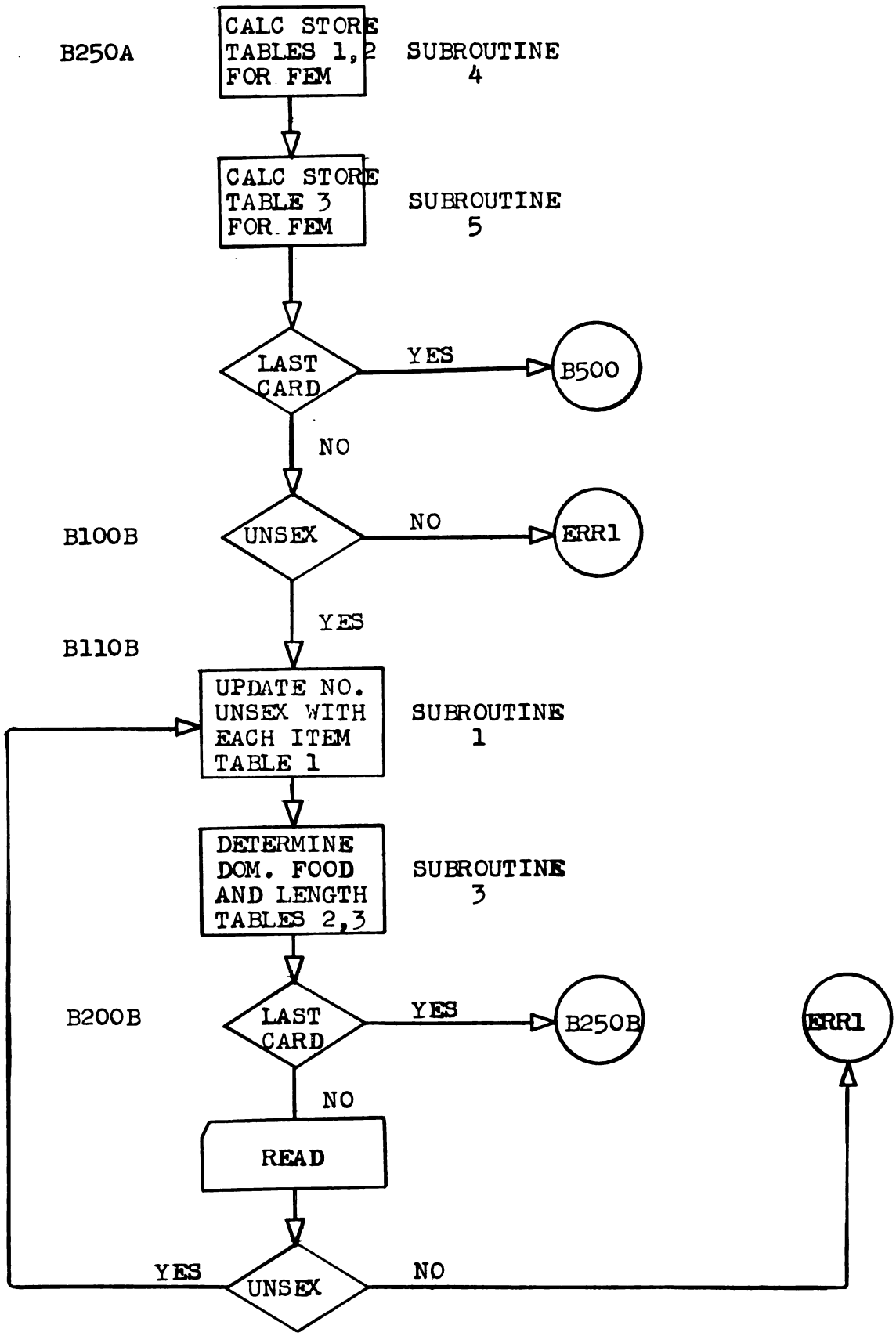
B250A
CALC STORE TABLES 1, 2 FOR FEM
SUBROUTINE 4
CALC STORE TABLE 3 FOR FEM
SUBROUTINE 5
LAST CARD
YES
B500
NO
B100B
UNSEX
NO
ERR1
YES
B110B
UPDATE NO. UNSEX WITH EACH ITEM TABLE 1
SUBROUTINE 1
DETERMINE DOM. FOOD AND LENGTH TABLES 2,3
SUBROUTINE 3
B200B
LAST CARD
YES
B250B
ERR1
NO
READ
YES
UNSEX
NO

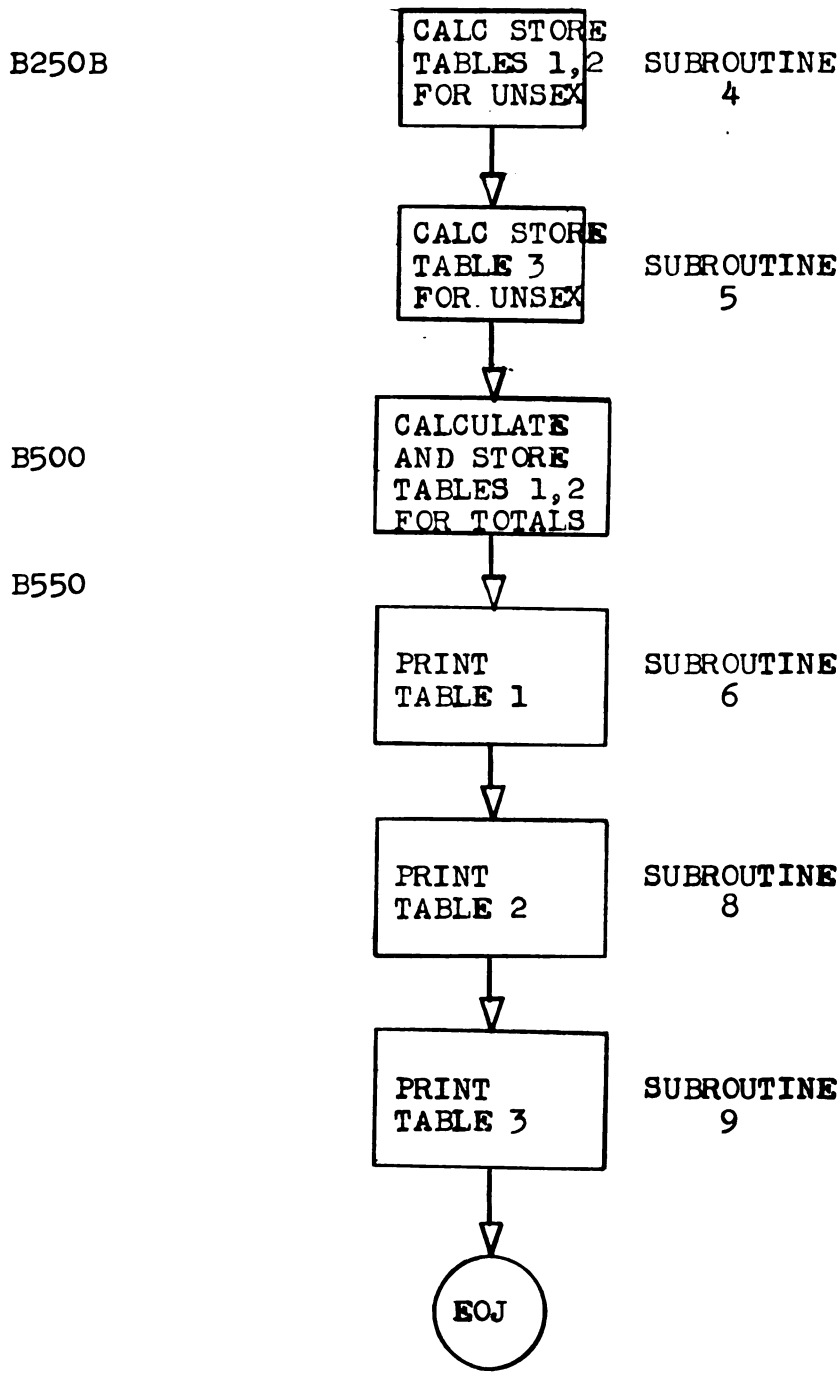
B250B
CALC STORE TABLES 1,2 FOR UNSEX
SUBROUTINE 4
CALC STORE TABLE 3 FOR UNSEX
SUBROUTINE 5
B500
CALCULATE AND STORE TABLES 1,2 FOR TOTALS
B550
PRINT TABLE 1
SUBROUTINE 6
PRINT TABLE 2
SUBROUTINE 8
PRINT TABLE 3
SUBROUTINE 9
EOJ

PROGRAM 00002

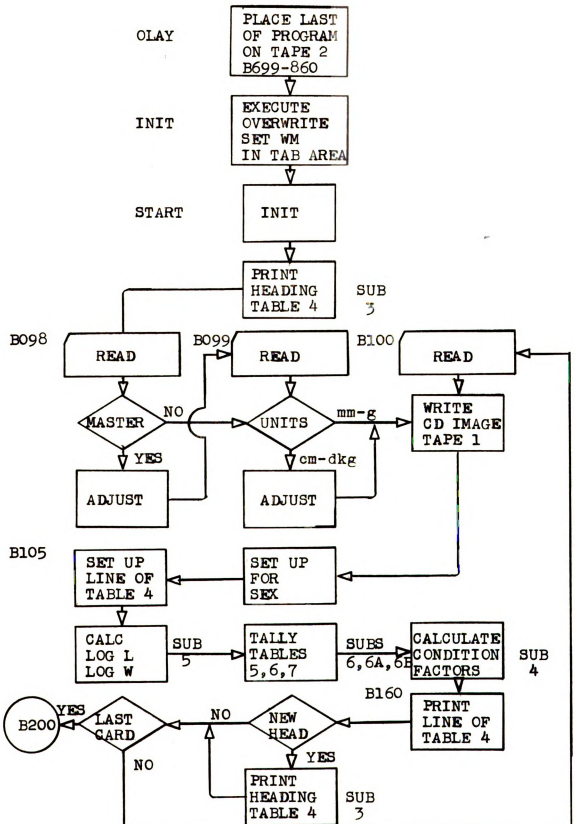

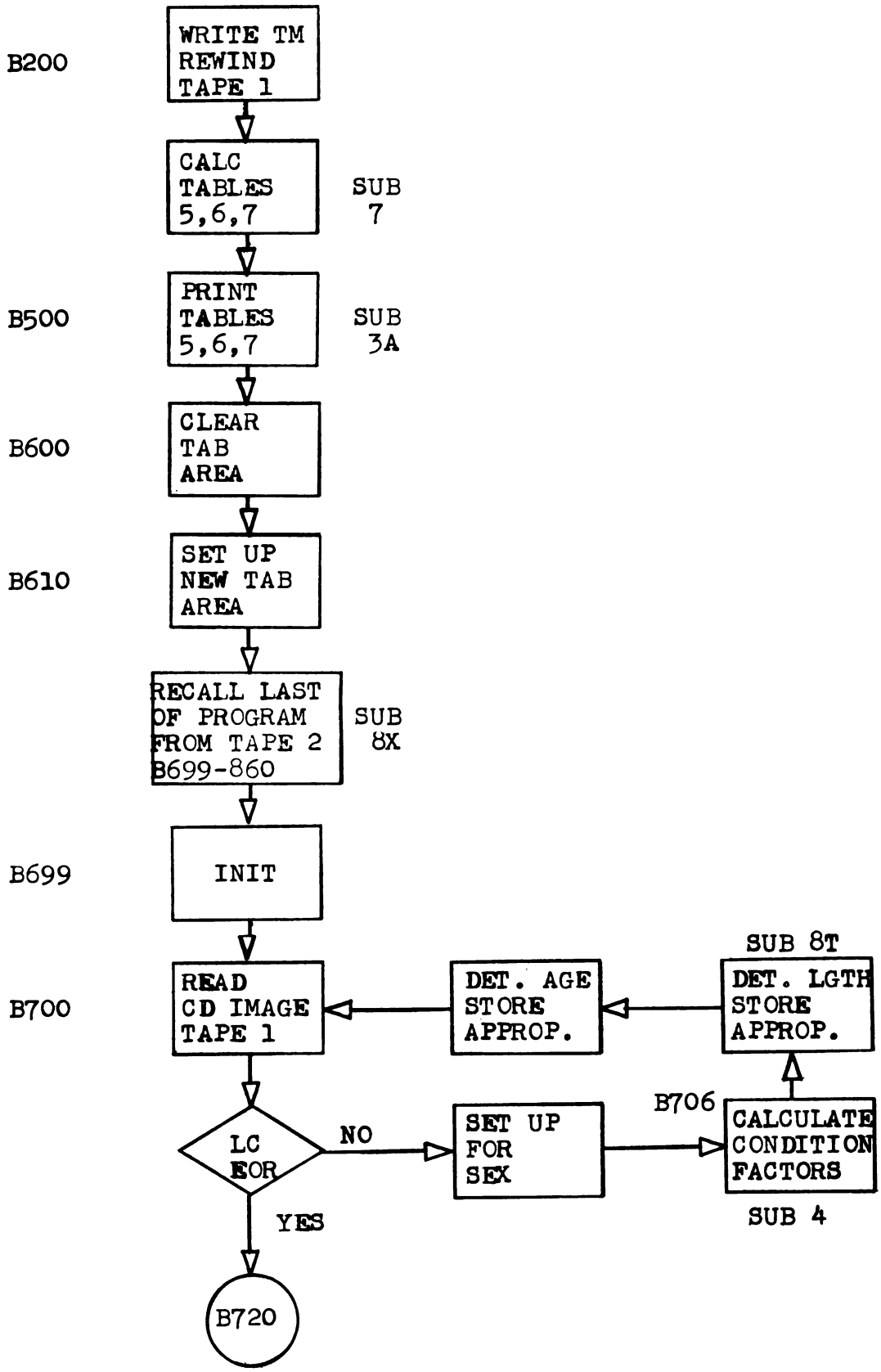
B200
WRITE TM
REWIND
TAPE 1
CALC
TABLES
5,6,7
SUB
7
B500
PRINT
TABLES
5,6,7
SUB
3A
B600
CLEAR
TAB
AREA
B610
SET UP
NEW TAB
AREA
RECALL LAST
OF PROGRAM
FROM TAPE 2
B699-860
SUB
8X
B699
INIT
B700
READ
CD IMAGE
TAPE 1
DET. AGE
STORE
APPROP.
SUB 8T
DET. LGTH
STORE
APPROP.
B706
LC
EOR
NO
SET UP
FOR
SEX
CALCULATE
CONDITION
FACTORS
SUB 4
YES
B720

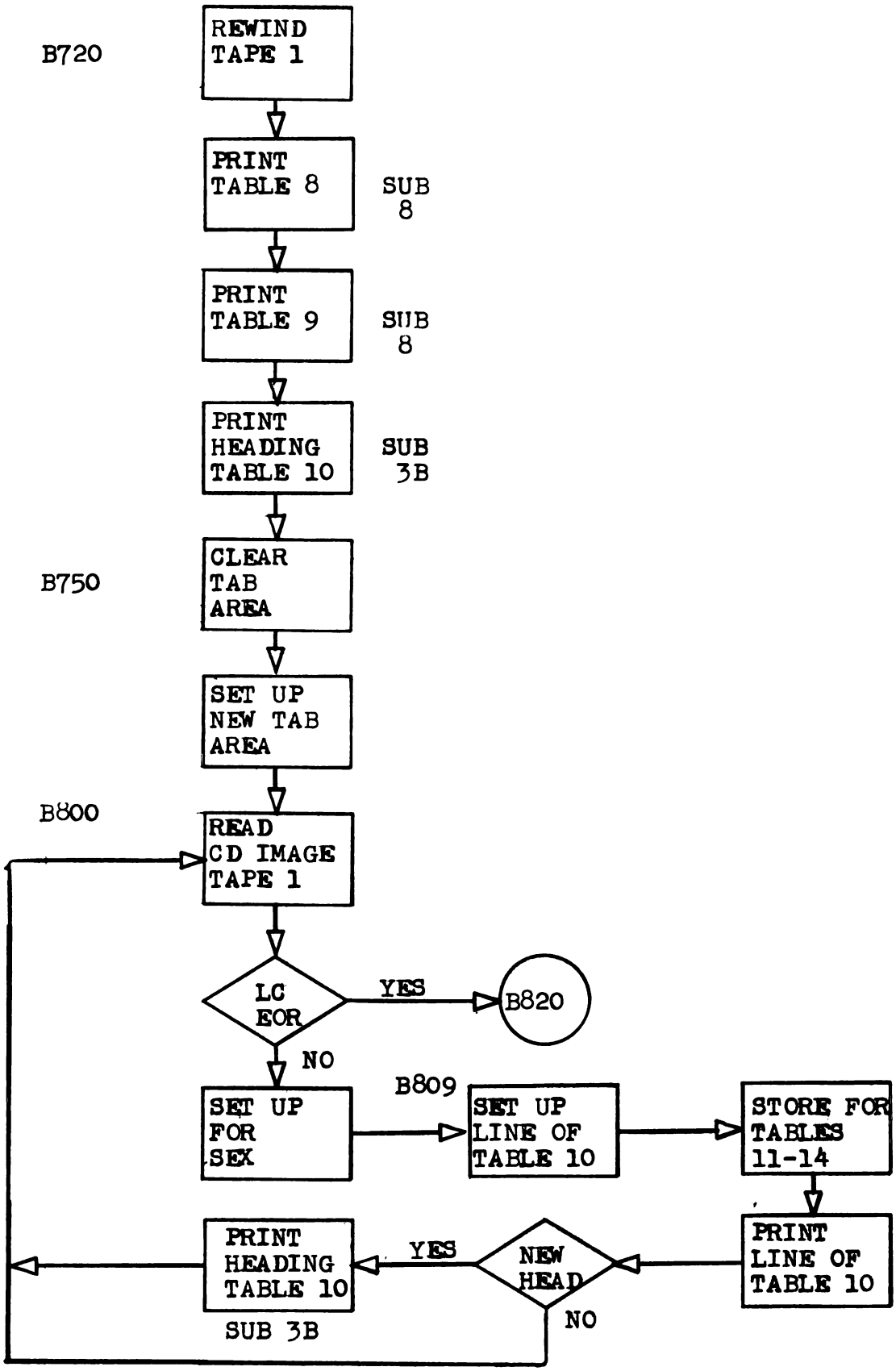
B720
REWIND TAPE 1
PRINT TABLE 8
SUB 8
PRINT TABLE 9
SUB 8
PRINT HEADING TABLE 10
SUB 3B
B750
CLEAR TAB AREA
SET UP NEW TAB AREA
B800
READ CD IMAGE TAPE 1
LC EOR
YES
B820
NO
B809
SET UP FOR SEX
SET UP LINE OF TABLE 10
STORE FOR TABLES 11-14
PRINT LINE OF TABLE 10
NEW HEAD
YES
NO
PRINT HEADING TABLE 10
SUB 3B

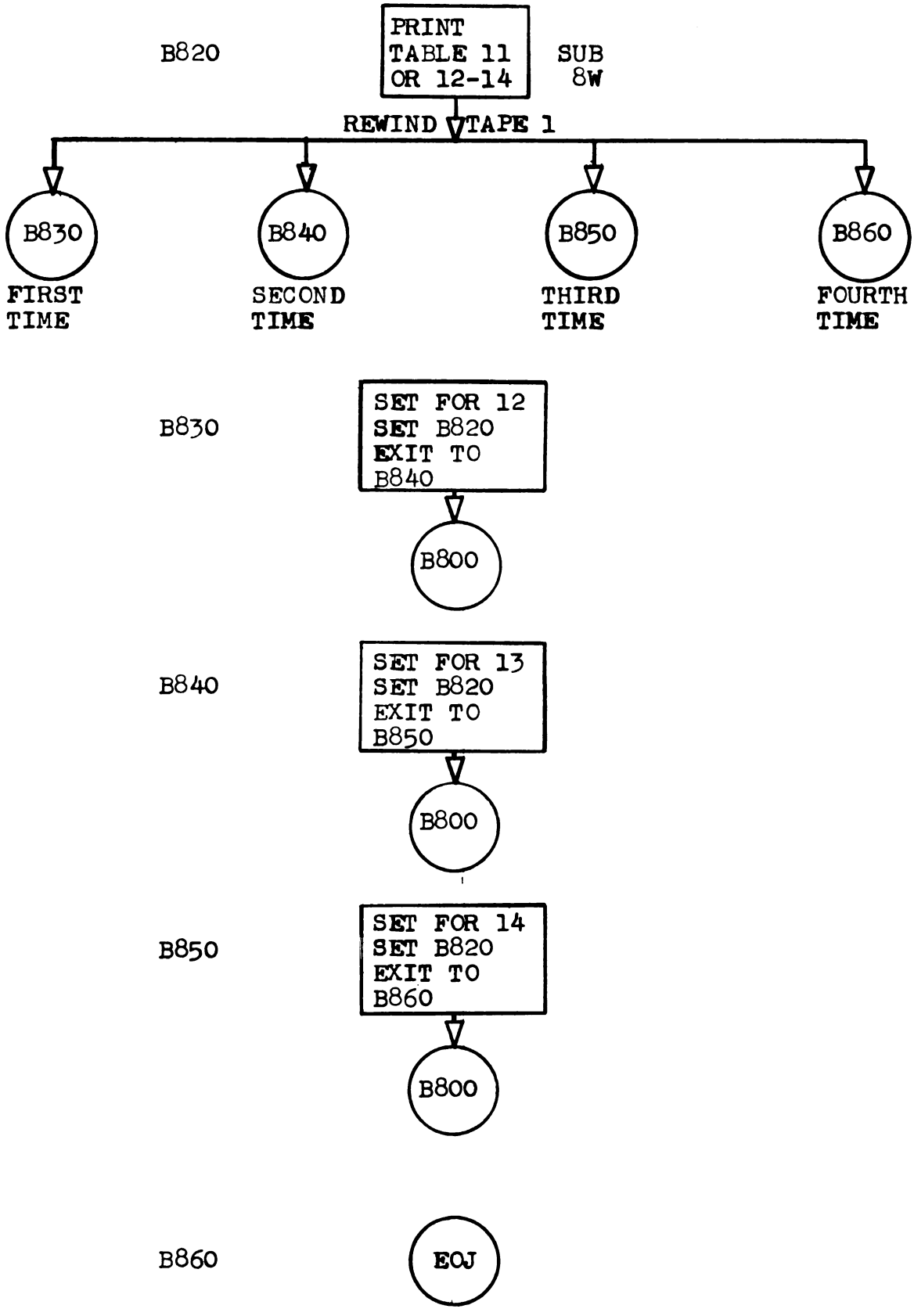
B820
PRINT
TABLE 11
OR 12-14
SUB
8W
REWIND TAPE 1
B830
B840
B850
B860
FIRST
TIME
SECOND
TIME
THIRD
TIME
FOURTH
TIME
B830
SET FOR 12
SET B820
EXIT TO
B840
B800
B840
SET FOR 13
SET B820
EXIT TO
B850
B800
B850
SET FOR 14
SET B820
EXIT TO
B860
B800
B860
EOJ

APPENDIX C

```
00010            ORG 1413                                                ORG U13
00015
00020             PROGRAM 00001
00025
00030             PROGRAM TO CALCULATE AND PRINT TABLES 1 TO 3
00035             INCLUDING A AND B VERSIONS
00040
00045             PROGRAMMER ROSS B.J. MACNAB
00050             JUNE 1962
00055
00060
00065  7 INIT    SW  0001        0004            START SET WORD    1413  , 001 004     #  4
00070  7         SW  0008        0010            MARKS IN READ     1420  , 008 010     #  4
00075  7         SW  0011        0012            AREA              1427  , 011 012     #  4
00080  7         SW  0015        0018                              1434  , 015 018     #  4
00085  7         SW  0021        0025                              1441  , 021 025     #  4
00090  7         SW  0028        0031                              1448  , 028 031     #  5
00095  7         SW  0034        0037                              1455  , 034 037     #  5
00100  7         SW  0040        0043                              1462  , 040 043     #  5
00105  7         SW  0046        0049                              1469  , 046 049     #  5
00110  7         SW  0052        0055                              1476  , 052 055     #  5
00115  7         SW  0058        0061                              1483  , 058 061     #  6
00120  7         SW  0061        0066            END SET WORD      1490  , 061 066     #  6
00125  7         SW  0069        0072            MARKS IN READ     1497  , 069 072     #  6
00130  7         SW  0075        0078            AREA              1504  , 075 078     #  6
00135
00140  7         SW  0087        0092            SET WORD MARKS    1511  , 087 092     #  6
00145  4         SW  0097                        IN INDEX REGS     1518  , 097         #  6
00150
00155  4 B010    SW  MITAT -0031                 SET WORD MARKS    1522  , 3T3         #  7
00160  7         A   C4          0089            IN TALLY AREA     1526  A /8U 089     #  7
00165  7         C   0089        C1080                             1533  C 089 S2T     #  7
00170  5         B   B010                    /                     1540  B V22 /       #  7
```

```
00175  5 B020   B    SUB2X                      B   WHICH INTERVAL     1545  B 044 B        #  7
00180  5        B    SUB2Y                      C   WHICH INTERVAL     1550  B P29 C        #  7
00185  5        B    SUB2V                      D   WHICH LENGTH       1555  B N22 D        #  7
00190  5        B    SUB2W                      E   WHICH LENGTH       1560  B N83 E        #  8
00195  7        SBR  0089         0000             END SET WORD MKS   1565  H 089 000      #  8
00200
00205            THIS IS THE STARTING POINT OF THE PROGRAM
00210
00215  1 B099   R                                  MASTER CARD        1572  1              #  8
00220  2        SS                             1                      1573  K 1            #  8
00225  8        B    B100         0080         -                      1575  B V87 080 -    #  8
00230  4        B    B100   &001                                      1583  B V88          #  8
00235  1 B100   R                                  INITIAL READ       1587  1              #  8
00240  2        SS                             1                      1588  K 1            #  8
00245  7        C    0010         ZEROS1                              1590  C 010 /6S      #  9
00250  5        B    B100A                       /   FEMALE OR UNSEX   1597  B X13 /        #  9
00255  7 B110   MCW  ZEROS3       FORU                                1602  M /7Y /4X      #  9
00260  4        B    SUB1                           TALLY TABLE 1      1609  B K60          #  9
00265  7        A    K1           MTOTT                               1613  A /6W 416      #  9
00270  7        A    K1           TTOTT                               1620  A /6W 428      #  9
00275  4        B    SUB3                           TALLY TABLE 2 3    1627  B Q55          #  9
00280  5 B200   B    B250                        A                      1631  B W71 A        # 10
00285  1        R                                                      1636  1              # 10
00290  2        SS                             1                      1637  K 1            # 10
00295  8        B    B110         0010         0   MALE               1639  B W02 010 0    # 10
00300  8        B    B250         0010         1   FINISH MALES       1647  B W71 010 1    # 10
00305  7        C    0010         BLANKS-005                          1655  C 010 /5/      # 10
00310  5        B    B250                        S   FINISH MALES      1662  B W71 S        # 10
00315  4        B    ERROR1                         SORTING ERROR      1667  B W3W          # 10
00320  4 B250   B    SUB4                           CALC TABLE 1 2     1671  B E13          # 11
00325  7        A    C176         0089                                1675  A /6Z 089      # 11
00330  7        A    C64          0094                                1682  A /7S 094      # 11
```

```
00335  7         A    C48          0099                                  1689  A /7V 099      # 11
00340  4         B    SUB5                          CALC TABLE 3        1696  B G64          # 11
00345  5         B    B500                     A                        1700  B J14 A        # 11
00350  4         B    SUB2Z                                             1705  B Q14          # 11
00355  4         B    B100A                                             1709  B X13          # 12
00360  7 B100A   C    0010         BLANKS-005                           1713  C 010 /5/      # 12
00365  5         B    B100B                    S   UNSEXED              1720  B Z28 S        # 12
00370  8         B    B101A        0010        1                        1725  B X37 010 1    # 12
00375  4         B    ERROR1                        SORTING ERROR       1733  B W3W          # 12
00380  7 B101A   A    C20          0094                                 1737  A ‡9Z 094      # 12
00385  7         A    C20          0099                                 1744  A ‡9Z 099      # 13
00390  7 B110A   MCW  C40          FORU                                 1751  M /2T /4X      # 13
00395  4         B    SUB1                          TALLY TABLE 1       1758  B K60          # 13
00400  7         A    K1           FTOTT                                1762  A /6W 420      # 13
00405  7         A    K1           TTOTT                                1769  A /6W 428      # 13
00410  7         A    C16          0099                                 1776  A ‡9W 099      # 13
00415  7         A    C4           0089                                 1783  A /8U 089      # 14
00420  4         B    SUB3                          TALLY TABLE 2 3     1790  B Q55          # 14
00425  5 B200A   B    B250A                    A                        1794  B Y30 A        # 14
00430  1         R                                                      1799  1              # 14
00435  2         SS                            1                        1800  K 1            # 14
00440  8         B    B100A &012   0010        1   FEMALE              1802  B X25 010 1    # 14
00445  7         C    0010         BLANKS-005                           1810  C 010 /5/      # 14
00450  5         B    B250A                    S   FINISH FEMALES       1817  B Y30 S        # 14
00455  8         B    ERROR1       0010        0   SORTING ERROR       1822  B W3W 010 0    # 15
00460  7 B250A   A    C4           0089                                 1830  A /8U 089      # 15
00465  7         A    C20          0094                                 1837  A ‡9Z 094      # 15
00470  7         A    C20          0099                                 1844  A ‡9Z 099      # 15
00475  7         MCW  C40          C20A                                 1851  M /2T U1W      # 15
00480  7         MCW  C128         C112A                                1858  M U2Y U1Z      # 16
00485  7         SBR  SUB4XA&003   C4                                   1865  H G35 /8U      # 16
00490  7         SBR  SUB4XB&003   C4                                   1872  H G42 /8U      # 16
00495  4         B    SUB4                          CALC TABLE 1 2      1879  B E13          # 16
```

```
00500  7         A    C212         0089                                  1883  A /4/ 089     # 16
00505  7         A    C48          0094                                  1890  A /7V 094     # 16
00510  7         A    C192         0099                                  1897  A U4T 099     # 17
00515  7         SBR  SUB5B &027   C336                                  1904  H H42 U2S     # 17
00520  4         B    SUB5                        CALC TABLE 3           1911  B G64         # 17
00525  5         B    B500                   A                           1915  B J14 A       # 17
00530  4         B    SUB2Z                                              1920  B Q14         # 17
00535  4         B    B100B                                              1924  B Z28         # 17
00540  7 B100B   C    0010         BLANKS-005                            1928  C 010 /5/     # 17
00545  5         B    B105B                  S    UNSEXED                1935  B Z44 S       # 18
00550  4         B    ERROR1                      SORTING ERROR          1940  B W3W         # 18
00555  7 B105B   A    C40          0094                                  1944  A /2T 094     # 18
00560  7         A    C40          0099                                  1951  A /2T 099     # 18
00565  7 B110B   MCW  C80          FORU                                  1958  M /2W /4X     # 18
00570  4         B    SUB1                        TALLY TABLE 1          1965  B K60         # 18
00575  7         A    K1           UTOTT                                 1969  A /6W 424     # 18
00580  7         A    K1           TTOTT                                 1976  A /6W 428     # 19
00585  7         A    C32          0099                                  1983  A /0Y 099     # 19
00590  7         A    C8           0089                                  1990  A /1X 089     # 19
00595  4         B    SUB3                        TALLY TABLE 2 3        1997  B Q55         # 19
00600  5 B200B   B    B250B                  A                           2001  B -25 A       # 19
00605  1         R                                                       2006  1             # 19
00610  2         SS                             1                       2007  K 1           # 19
00615  7         C    0010         BLANKS-005                            2009  C 010 /5/     # 19
00620  5         B    B105B                  S                           2016  B Z44 S       # 20
00625  4         B    ERROR1                      SORTING ERROR          2021  B W3W         # 20
00630  7 B250B   A    C8           0089                                  2025  A /1X 089     # 20
00635  7         A    C40          0094                                  2032  A /2T 094     # 20
00640  7         A    C40          0099                                  2039  A /2T 099     # 20
00645  7         MCW  C60          C20A                                  2046  M S1X U1W     # 20
00650  7         MCW  C144         C112A                                 2053  M U3/ U1Z     # 21
00655  7         SBR  SUB4XA&003   C8                                    2060  H G35 /1X     # 21
```

```
00660  7        SBR SUB4XB&003  C8                                2067  H G42 /1X     # 21
00665  4        B   SUB4                        CALC TABLE 1 2    2074  B E13         # 21
00670  7        A   C248        0089                              2078  A /4U 089     # 21
00675  7        A   C32         0094                              2085  A /0Y 094     # 21
00680  7        A   C336        0099                              2092  A U2S 099     # 22
00685  7        SBR SUB5B &027  C376                              2099  H H42 U3X     # 22
00690  4        B   SUB5                        CALC TABLE 3      2106  B G64         # 22
00695  4        B   B500                                          2110  B J14         # 22
00700  7 B500   ZA  ZEROX4      DIVIS1          ROUTINE TO        2114  & S0V S0/     # 22
00705  7        MCW TITAT     2 DIVIS1-004      CALCULATE AND     2121  M 3R6 /9X     # 22
00710  7        D   TTOTT       DIVIS1-007      STORE TABLE ONE   2128  % 428 /9U     # 23
00715  7        A   C5          DIVIS1-005      AND TWO VALUES    2135  A S1/ /9W     # 23
00720  7        MCW DIVIS1-006  TITAP     2     FOR TOTALS        2142  M /9V 8N2     # 23
00725  7        A   C4          0094                              2149  A /8U 094     # 23
00730  7        C   0094        C20                               2156  C 094 ‡9Z     # 23
00735  5        B   B500                    /                     2163  B J14 /       # 23
00740  4        B   SUB2                                          2168  B M99         # 24
00745  7 B550   ZA  ZEROX4      DIVIS1                            2172  & S0V S0/     # 24
00750  7        MCW TITAD     2 DIVIS1-004                        2179  M 4Q0 /9X     # 24
00755  7        D   TTOTD       DIVIS1-007                       2186  % 508 /9U     # 24
00760  7        A   C5          DIVIS1-005                        2193  A S1/ /9W     # 24
00765  7        MCW DIVIS1-006  TITAPD    2                       2200  M /9V 9K0     # 24
00770  7        A   C4          0094                              2207  A /8U 094     # 25
00775  7        C   0094        C16                               2214  C 094 ‡9W     # 25
00780  5        B   B550                    /                     2221  B J72 /       # 25
00785  4        B   SUB4X                                         2226  B G28         # 25
00790  4        B   SUB2                        ZERO INDEX REGS   2230  B M99         # 25
00795  4        B   SUB6                        PRINT TABLE 1     2234  B H96         # 25
00800  7        SBR SUB7B &010  C16                               2238  H 22S ‡9W     # 25
00805  4        B   SUB8                        PRINT TABLE 2     2245  B 24W         # 26
00810  4        B   SUB9                        PRINT TABLE 3     2249  B 49X         # 26
00815  7 FINISH H   0999        0999                              2253  . 999 999     # 26
00820
```

```
00825
00830              SUBROUTINES
00835
00840  4 SUB1    SBR EXIT1 &003                      SUBROUTINE TO     2260  H M98          # 26
00845  7         MCW C400        SUB1T &006         TALLY NUMBER OF   2264  M U4Z L22      # 26
00850  7         C   0068        ZEROS3             FISH CONTAINING   2271  C 068 /7Y      # 26
00855  5         B   SUB1C                     S    EACH FOOD ITEM    2278  B L91 S        # 26
00860  7         A   K1          MITAT      2                        2283  A /6W 3L6      # 27
00865  7         A   K1          TITAT                               2290  A /6W 396      # 27
00870  7 SUB1A   C   0071      1 ZEROS3                              2297  C 0X1 /7Y      # 27
00875  5         B   SUB1B                     S                     2304  B L23 S        # 27
00880  7 SUB1D   A   K1          MITBT      2                        2309  A /6W 3M0      # 27
00885  7 SUB1T   A   K1          0000                                2316  A /6W 000      # 27
00890  7 SUB1B   A   C3          0089                                2323  A /8/ 089      # 28
00895  7         A   C4          0094                                2330  A /8U 094      # 28
00900  7         C   0089        C3                                  2337  C 089 /8/      # 28
00905  5         B   SUB1X                    /                     2344  B L56 /        # 28
00910  7         MCW C404        SUB1T &006                          2349  M S2W L22      # 28
00915  7 SUB1X   C   0089        C6                                  2356  C 089 /1U      # 28
00920  5         B   SUB1Y                    /                     2363  B L75 /        # 29
00925  7         MCW C408        SUB1T &006                          2368  M S2Z L22      # 29
00930  7 SUB1Y   C   0089        C9                                  2375  C 089 /2‡      # 29
00935  5         B   SUB1A                    /                     2382  B K97 /        # 29
00940  4         B   SUB1H                                           2387  B M91          # 29
00945  7 SUB1C   C   0071        ZEROS3                              2391  C 071 /7Y      # 29
00950  5         B   SUB1D                    /                     2398  B L09 /        # 29
00955  7         C   0074        ZEROS3                              2403  C 074 /7Y      # 30
00960  5         B   SUB1F                    S                     2410  B M40 S        # 30
00965  7         A   C3          0089                                2415  A /8/ 089      # 30
00970  7         A   C4          0094                                2422  A /8U 094      # 30
00975  7         MCW C404        SUB1T &006                          2429  M S2W L22      # 30
00980  4         B   SUB1D                                           2436  B L09          # 30
```

```
00985  7 SUB1F  C   0077         ZEROS3                                2440  C 077 /7Y      # 31
00990  5        B   SUB1G                    S                        2447  B M77 S        # 31
00995  7        A   C6           0089                                 2452  A /1U 089      # 31
01000  7        A   C8           0094                                 2459  A /1X 094      # 31
01005  7        MCW C408         SUB1T &006                           2466  M S2Z L22      # 31
01010  4        B   SUB1D                                              2473  B L09          # 31
01015  7 SUB1G  A   K1           MITET      3                         2477  A /6W 3E2      # 32
01020  7        A   K1           TITET                                2484  A /6W 412      # 32
01025  4 SUB1H  B   SUB2                                              2491  B M99          # 32
01030  4 EXIT1  B   0000                            END SUB ONE       2495  B 000          # 32
01035
01040
01045  4 SUB2   SBR EXIT2 &003                     SUBROUTINE TO     2499  H N21          # 32
01050  7        SBR 0089         0000               ZERO ALL INDEX    2503  H 089 000      # 32
01055  4        SBR 0094                            REGISTERS         2510  H 094          # 32
01060  4        SBR 0099                                              2514  H 099          # 32
01065  4 EXIT2  B   0000                            END SUB TWO       2518  B 000          # 33
01070
01075
01080  4 SUB2V  SBR EXIT2V&003                     SUBROUTINE TO     2522  H N82          # 33
01085  7        SBR SUB3TL&003   0017               USE STANDARD      2526  H B28 017      # 33
01090  4        SBR SUB3TL&015                      LENGTH            2533  H B40          # 33
01095  4        SBR SUB3T3&003                                        2537  H B70          # 33
01100  4        SBR SUB3T4&003                                        2541  H C00          # 33
01105  4        SBR SUB3T5&003                                        2545  H C30          # 33
01110  4        SBR SUB3T6&003                                        2549  H C60          # 33
01115  4        SBR SUB3T7&003                                        2553  H C90          # 34
01120  4        SBR SUB3T8&003                                        2557  H D20          # 34
01125  4        SBR SUB3T9&003                                        2561  H D50          # 34
01130  7        SBR SUB9  &023   STAND                                2565  H 52# T1/      # 34
01135  7        MCW A            TABLE3                               2572  M /5X S5/      # 34
01140  4 EXIT2V B   0000                            END SUB TWO V     2579  B 000          # 34
01145
```

```
01150
01155  4 SUB2W  SBR EXIT2W&003                    SUBROUTINE TO     2583  H 043          # 34
01160  7        SBR SUB3TL&003  0020              USE FORK LENGTH   2587  H B28 020      # 34
01165  4        SBR SUB3TL&015                                      2594  H B40          # 35
01170  4        SBR SUB3T3&003                                      2598  H B70          # 35
01175  4        SBR SUB3T4&003                                      2602  H C00          # 35
01180  4        SBR SUB3T5&003                                      2606  H C30          # 35
01185  4        SBR SUB3T6&003                                      2610  H C60          # 35
01190  4        SBR SUB3T7&003                                      2614  H C90          # 35
01195  4        SBR SUB3T8&003                                      2618  H D20          # 35
01200  4        SBR SUB3T9&003                                      2622  H D50          # 35
01205  7        SBR SUB9  &023  FORK                                2626  H 52‡ TOW      # 36
01210  7        MCW B           TABLE3                              2633  M /5Y S5/      # 36
01215  4 EXIT2W B   0000                          END SUB TWO W     2640  B 000          # 36
01220
01225
01230  4 SUB2X  SBR EXIT2X&003                    SUBROUTINE TO     2644  H P28          # 36
01235  7        SBR SUB9X &003  LENGA             SHORTEN LENGTH    2648  H 69S U7/      # 36
01240  7        MZ  TAGONE      SUB9X &002        INTERVAL TO 50    2655  Y W3V 69/      # 36
01245  7        SBR SUB3TL&006  C51                                 2662  H B31 V3X      # 37
01250  7        SBR SUB3TL&018  C100                                2669  H B43 U3U      # 37
01255  7        SBR SUB3T3&006  C150                                2676  H B73 S0Y      # 37
01260  7        SBR SUB3T4&006  C200                                2683  H C03 U2V      # 37
01265  7        SBR SUB3T5&006  C250                                2690  H C33 V4‡      # 37
01270  7        SBR SUB3T6&006  C300                                2697  H C63 U4W      # 38
01275  7        SBR SUB3T7&006  C350                                2704  H C93 V4T      # 38
01280  7        SBR SUB3T8&006  C400                                2711  H D23 U4Z      # 38
01285  7        SBR SUB3T9&006  C450                                2718  H D53 V4W      # 38
01290  4 EXIT2X B   0000                          END SUB TWO X     2725  B 000          # 38
01295
01300
01305  4 SUB2Y  SBR EXIT2Y&003                    SUBROUTINE TO     2729  H Q13          # 38
```

```
01310  7         SBR  SUB9X &003  LENGK            SHORTEN LENGTH    2733  H 69S V5T     # 39
01315  7         MZ   TAGONE      SUB9X &002       INTERVAL TO 25    2740  Y W3V 69/     # 39
01320  7         SBR  SUB3TL&006  C26                               2747  H B31 W1Z     # 39
01325  7         SBR  SUB3TL&018  C50                               2754  H B43 W2S     # 39
01330  7         SBR  SUB3T3&006  C75                               2761  H B73 W2V     # 39
01335  7         SBR  SUB3T4&006  C100                              2768  H C03 U3U     # 40
01340  7         SBR  SUB3T5&006  C125                              2775  H C33 W2Y     # 40
01345  7         SBR  SUB3T6&006  C150                              2782  H C63 S0Y     # 40
01350  7         SBR  SUB3T7&006  C175                              2789  H C93 W3/     # 40
01355  7         SBR  SUB3T8&006  C200                              2796  H D23 U2V     # 40
01360  7         SBR  SUB3T9&006  C225                              2803  H D53 W3U     # 41
01365  4 EXIT2Y  B    0000                        END SUB TWO Y     2810  B 000         # 41
01370
01375
01380  4 SUB2Z   SBR  EXIT2Z&003                  SUBROUTINE TO     2814  H Q54         # 41
01385  7         MCW  BLANKS-002  0512      1     BLANK AREAS USED  2818  M /5U 5/2     # 41
01390  7         A    C4          0089            FOR MALE FEMALE   2825  A /8U 089     # 41
01395  7         C    0089        C160            AND UNSEXED       2832  C 089 U0U     # 41
01400  5         B    SUB2Z &004              /                    2839  B Q18 /       # 41
01405  7         SBR  0089        0000                              2844  H 089 000     # 42
01410  4 EXIT2Z  B    0000                        END SUB TWO Z     2851  B 000         # 42
01415
01420
01425  4 SUB3    SBR  EXIT3 &003                 SUBROUTINE TO     2855  H E12         # 42
01430  7         C    0068        ZEROS3          DETERMINE         2859  C 068 /7Y     # 42
01435  5         B    SUB3A                   S   DOMINANT FOOD     2866  B R17 S       # 42
01440  7 SUB3E   C    0068        0071       2    ITEM AND TOTAL    2871  C 068 OP1     # 42
01445  5         B    SUB3BX                  U   LENGTH            2878  B R06 U       # 42
01450  7         MA   C3          0094                              2883  # /8/ 094     # 43
01455  7         C    0094        C9                                2890  C 094 /2‡     # 43
01460  5         B    SUB3CA                  S   ITEM A DOMINANT   2897  B &12 S       # 43
01465  4         B    SUB3E                                         2902  B Q71         # 43
01470  7 SUB3BX  SBR  0094        0000                              2906  H 094 000     # 43
```

```
01475  4          B   SUB3B                                          2913  B R29          # 43
01480  7 SUB3A    C   0071        ZEROS3                             2917  C 071 /7Y      # 43
01485  5          B   SUB3AA                  S                      2924  B R64 S        # 44
01490  7 SUB3B    C   0071        0074     2                         2929  C 071 OP4      # 44
01495  5          B   SUB3BA                  U                      2936  B R96 U        # 44
01500  7          MA  C3          0094                               2941  # /8/ 094      # 44
01505  7          C   0094        C6                                 2948  C 094 /1U      # 44
01510  5          B   SUB3B                    /                      2955  B R29 /        # 44
01515  4          B   SUB3CB                       ITEM B DOMINANT   2960  B &44         # 44
01520  7 SUB3AA   C   0074        ZEROS3                             2964  C 074 /7Y      # 45
01525  5          B   SUB3AB                  S                      2971  B R80 S        # 45
01530  4          B   SUB3BA                                          2976  B R96          # 45
01535  7 SUB3AB   C   0077        ZEROS3                             2980  C 077 /7Y      # 45
01540  5          B   SUB3NO                  S   EMPTY STOMACH      2987  B A40 S        # 45
01545  4 SUB3D    B   SUB3CD                      ITEM D DOMINANT   2992  B A08         # 45
01550  7 SUB3BA   C   0074        0077                               2996  C 074 077      # 45
01555  5          B   SUB3D                    U                      3003  B R92 U        # 46
01560  4          B   SUB3CC                       ITEM C DOMINANT   3008  B &76         # 46
01565  7 SUB3CA   A   K1          MITAD    3      DOMINANT A ROUTE  3012  A /6W 4C2      # 46
01570  7          A   K1          MTOTD    1                         3019  A /6W 4Z6      # 46
01575  7          A   K1          TTOTD                              3026  A /6W 508      # 46
01580  7          A   K1          TITAD                              3033  A /6W 480      # 46
01585  4          B   SUB3DA                                         3040  B A44          # 46
01590  7 SUB3CB   A   K1          MITBD    3      DOMINANT B ROUTE  3044  A /6W 4C6      # 47
01595  7          A   K1          MTOTD    1                         3051  A /6W 4Z6      # 47
01600  7          A   K1          TTOTD                              3058  A /6W 508      # 47
01605  7          A   K1          TITBD                              3065  A /6W 484      # 47
01610  4          B   SUB3DB                                         3072  B A59          # 47
01615  7 SUB3CC   A   K1          MITCD    3      DOMINANT C ROUTE  3076  A /6W 4D0      # 47
01620  7          A   K1          MTOTD    1                         3083  A /6W 4Z6      # 48
01625  7          A   K1          TTOTD                              3090  A /6W 508      # 48
01630  7          A   K1          TITCD                              3097  A /6W 488      # 48
01635  4          B   SUB3DC                                         3104  B A81          # 48
```

```
01640  7 SUB3CD A   K1          MITDD     3     DOMINANT D ROUTE  3108  A /6W 4D4     # 48
01645  7         A   K1          MTOTD     1                       3115  A /6W 4Z6     # 48
01650  7         A   K1          TTOTD                             3122  A /6W 508     # 49
01655  7         A   K1          TITDD                             3129  A /6W 492     # 49
01660  4         B   SUB3CD                                        3136  B B03         # 49
01665  4 SUB3NO  B   EXIT3 -004                 NO FOOD ROUTE     3140  B E05         # 49
01670  4 SUB3DA  B   SUB2                       DOMINANT A ROUTE  3144  B M99         # 49
01675  7         MCW FORU        0089                              3148  M /4X 089     # 49
01680  4         B   SUB3TL                                        3155  B B25         # 49
01685  4 SUB3DB  B   SUB2                       DOMINANT B ROUTE  3159  B M99         # 49
01690  7         MCW FORU        0089                              3163  M /4X 089     # 50
01695  7         MA  C40         0094                              3170  # /2T 094     # 50
01700  4         B   SUB3TL                                        3177  B B25         # 50
01705  4 SUB3DC  B   SUB2                       DOMINANT C ROUTE  3181  B M99         # 50
01710  7         MCW FORU        0089                              3185  M /4X 089     # 50
01715  7         MA  C80         0094                              3192  # /2W 094     # 50
01720  4         B   SUB3TL                                        3199  B B25         # 50
01725  4 SUB3DD  B   SUB2                       DOMINANT D ROUTE  3203  B M99         # 51
01730  7         MCW FORU        0089                              3207  M /4X 089     # 51
01735  7         MA  C120        0094                              3214  # /3Y 094     # 51
01740  4         B   SUB3TL                                        3221  B B25         # 51
01745  7 SUB3TL  C   0014        C101              DETERMINE TOTAL 3225  C 014 /5#     # 51
01750  5         B   SUB3X                     U   LENGTH          3232  B D91 U       # 51
01755  7         C   0014        C200                              3237  C 014 U2V     # 51
01760  5         B   SUB3T3                    T                   3244  B B67 T       # 52
01765  7         MA  C4          0089                              3249  # /8U 089     # 52
01770  7         MA  C4          0094                              3256  # /8U 094     # 52
01775  4         B   SUB3X                         101 TO 200      3263  B D91         # 52
01780  7 SUB3T3  C   0014        C300                              3267  C 014 U4W     # 52
01785  5         B   SUB3T4                    T                   3274  B B97 T       # 52
01790  7         MA  C8          0089                              3279  # /1X 089     # 53
01795  7         MA  C8          0094                              3286  # /1X 094     # 53
01800  4         B   SUB3X                         201 TO 300      3293  B D91         # 53
```

```
01805  7 SUB3T4 C   0014        C400                                3297  C 014 U4Z     # 53
01810  5         B   SUB3T5                  T                     3304  B C27 T       # 53
01815  7         MA  C12         0089                              3309  # ‡9T 089     # 53
01820  7         MA  C12         0094                              3316  # ‡9T 094     # 54
01825  4         B   SUB3X                       301 TO 400        3323  B D91         # 54
01830  7 SUB3T5  C   0014        C500                              3327  C 014 U5S     # 54
01835  5         B   SUB3T6                  T                     3334  B C57 T       # 54
01840  7         MA  C16         0089                              3339  # ‡9W 089     # 54
01845  7         MA  C16         0094                              3346  # ‡9W 094     # 54
01850  4         B   SUB3X                       401 TO 500        3353  B D91         # 54
01855  7 SUB3T6  C   0014        C600                              3357  C 014 U5V     # 55
01860  5         B   SUB3T7                  T                     3364  B C87 T       # 55
01865  7         MA  C20         0089                              3369  # ‡9Z 089     # 55
01870  7         MA  C20         0094                              3376  # ‡9Z 094     # 55
01875  4         B   SUB3X                       501 TO 600        3383  B D91         # 55
01880  7 SUB3T7  C   0014        C700                              3387  C 014 U5Y     # 55
01885  5         B   SUB3T8                  T                     3394  B D17 T       # 56
01890  7         MA  C24         0089                              3399  # /0S 089     # 56
01895  7         MA  C24         0094                              3406  # /0S 094     # 56
01900  4         B   SUB3X                       601 TO 700        3413  B D91         # 56
01905  7 SUB3T8  C   0014        C800                              3417  C 014 U6/     # 56
01910  5         B   SUB3T9                  T                     3424  B D47 T       # 56
01915  7         MA  C28         0089                              3429  # /0V 089     # 57
01920  7         MA  C28         0094                              3436  # /0V 094     # 57
01925  4         B   SUB3X                       701 TO 800        3443  B D91         # 57
01930  7 SUB3T9  C   0014        C900                              3447  C 014 U6U     # 57
01935  5         B   SUB3T0                  T                     3454  B D77 T       # 57
01940  7         MA  C32         0089                              3459  # /0Y 089     # 57
01945  7         MA  C32         0094                              3466  # /0Y 094     # 58
01950  4         B   SUB3X                       801 TO 900        3473  B D91         # 58
01955  7 SUB3T0  MA  C36         0089            901 TO 999        3477  # /1/ 089     # 58
01960  7         MA  C36         0094                              3484  # /1/ 094     # 58
```

```
01965  7 SUB3X  A   K1          TL100A    2                          3491  A /6W 5J2     # 58
01970  7        A   K1          TL100M    1                          3498  A /6W 6X2     # 58
01975  4        B   SUB2                                             3505  B M99         # 59
01980  4 EXIT3  B   0000                          END SUB THREE      3509  B 000         # 59
01985
01990
01995  4 SUB4   SBR EXIT4 &003                    SUBROUTINE TO      3513  H G27         # 59
02000  7        C   MTOTT     1 ZEROS4            CALCULATE AND      3517  C 4/6 /8Y     # 59
02005  5        B   SUB4B                   S     STORE TABLE ONE    3524  B E94 S       # 59
02010  7 SUB4A   ZA  ZEROX4      DIVIS1            AND TWO VALUES     3529  & SOV SO/     # 59
02015  7        MCW MITAT     2 DIVIS1-004                           3536  M 3L6 /9X     # 59
02020  7        D   MTOTT     1 DIVIS1-007                           3543  % 4/6 /9U     # 60
02025  7        A   C5          DIVIS1-005                           3550  A S1/ /9W     # 60
02030  7        MCW DIVIS1-006  MITAP     3                          3557  M /9V 7I2     # 60
02035  7        A   C4          0094                                 3564  A /8U 094     # 60
02040  7        A   C4          0099                                 3571  A /8U 099     # 60
02045  7        C   0094        C20A                                 3578  C 094 U1W     # 61
02050  5        B   SUB4C                   S     END CALCULATION    3585  B F08 S       # 61
02055  4        B   SUB4A                         FOR TABLE ONE      3590  B E29         # 61
02060  7 SUB4B   A   C20         0094                                 3594  A ‡9Z 094     # 61
02065  7        A   C20         0099                                 3601  A ‡9Z 099     # 61
02070  7 SUB4C   A   C80         0089                                 3608  A /2W 089     # 61
02075  7        A   C76         0094                                 3615  A S1U 094     # 62
02080  7        A   C60         0099                                 3622  A S1X 099     # 62
02085  4        B   SUB4X                                            3629  B G28         # 62
02090  7        C   MTOTT     1 ZEROS4                               3633  C 4/6 /8Y     # 62
02095  5        B   SUB4E                   S                        3640  B G10 S       # 62
02100  7 SUB4D   ZA  ZEROX4      DIVIS1                               3645  & SOV SO/     # 62
02105  7        MCW MITAT     2 DIVIS1-004                           3652  M 3L6 /9X     # 63
02110  7        D   MTOTT     1 DIVIS1-007                           3659  % 4/6 /9U     # 63
02115  7        A   C5          DIVIS1-005                           3666  A S1/ /9W     # 63
02120  7        MCW DIVIS1-006  MITAP     3                          3673  M /9V 7I2     # 63
```

```
02125  7         A    C4           0094                                  3680  A /8U 094      # 63
02130  7         A    C4           0099                                  3687  A /8U 099      # 64
02135  7         C    0094         C112A                                 3694  C 094 U1Z      # 64
02140  5         B    EXIT4                     S                        3701  B G24 S        # 64
02145  4         B    SUB4D                         FOR TABLE TWO        3706  B F45          # 64
02150  7 SUB4E   A    C16          0094                                  3710  A ‡9W 094      # 64
02155  7         A    C16          0099                                  3717  A ‡9W 099      # 64
02160  4 EXIT4   B    0000                          END SUB FOUR         3724  B 000          # 64
02165
02170
02175  4 SUB4X   SBR  EXIT4X&003                    SUBROUTINE FOR       3728  H G63          # 65
02180  7 SUB4XA  S    COA          0094             INDEX ADJUSTMENT     3732  S U4‡ 094      # 65
02185  7 SUB4XB  S    COA          0099             IN SUB 4             3739  S U4‡ 099      # 65
02190  7         MZ   ZONES        0094                                  3746  Y /6/ 094      # 65
02195  7         MZ   ZONES        0099                                  3753  Y /6/ 099      # 65
02200  4 EXIT4X  B    0000                          END SUB FOUR X       3760  B 000          # 65
02205
02210
02215  4 SUB5    SBR  EXIT5 &003                    SUBROUTINE TO        3764  H H95          # 65
02220  7 SUB5A   C    MTOTT      1 ZEROS4           CALCULATE AND        3768  C 4/6 /8Y      # 66
02225  5         B    SUB5B                     S   STORE TABLE          3775  B H15 S        # 66
02230  7         ZA   ZEROX4       DIVIS1            THREE VALUES         3780  & S0V S0/      # 66
02235  7         MCW  MITAT      2 DIVIS1-004                            3787  M 3L6 /9X      # 66
02240  7         D    MTOTT      1 DIVIS1-007                            3794  % 4/6 /9U      # 66
02245  7         A    C5           DIVIS1-005                            3801  A S1/ /9W      # 66
02250  7         MCW  DIVIS1-006   MITAP      3                          3808  M /9V 7I2      # 67
02255  7 SUB5B   A    C4           0089                                  3815  A /8U 089      # 67
02260  7         A    C4           0094                                  3822  A /8U 094      # 67
02265  7         A    C4           0099                                  3829  A /8U 099      # 67
02270  7         C    0089         C296                                  3836  C 089 S2‡      # 67
02275  5         B    SUB5A                     /                        3843  B G68 /        # 67
02280  7         S    C40          0089                                  3848  S /2T 089      # 68
```

```
02285  7         MZ   ZONES       0089                                3855  Y /6/ 089     # 68
02290  7         A    ONE         CONTR1                              3862  A ‡9‡ /5Z     # 68
02295  7         C    CONTR1      FOUR                                3869  C /5Z /6‡     # 68
02300  5         B    SUB5A                    /                      3876  B G68 /       # 68
02305  7         MCW  ZEROS1      CONTR1                              3881  M /6S /5Z     # 68
02310  4         B    SUB2                                            3888  B M99         # 69
02315  4 EXIT5   B    0000                         END SUB FIVE       3892  B 000         # 69
02320
02325
02330  4 SUB6    SBR  EXIT6 &003                   SUBROUTINE TO      3896  H 16Z         # 69
02335  2         CC                       3        PRINT OUT TABLE    3900  F 3           # 69
02340  7         MCW  TABLE1      0253             ONE                3902  M S3W 253     # 69
02345  1         W                                                    3909  2             # 69
02350  4         CS   0299                                            3910  / 299         # 69
02355  2         CC                       L                           3914  F L           # 69
02360  7         MCW  MALE        0244                                3916  M S8W 244     # 70
02365  7         MCW  FEM         0252                                3923  M S9/ 252     # 70
02370  7         MCW  UNSEX       0259                                3930  M S9W 259     # 70
02375  7         MCW  TOTAL       0267                                3937  M T0/ 267     # 70
02380  7         MCW  NOOF        0274                                3944  M T1W 274     # 70
02385  7         MCW  FISH        0279                                3951  M T2‡ 279     # 71
02390  1         W                                                    3958  2             # 71
02395  4         CS   0299                                            3959  / 299         # 71
02400  2         CC                       J                           3963  F J           # 71
02405  7         MCW  ITEMA       0230                                3965  M S5X 230     # 71
02410  4         B    SUB7                                            3972  B 17‡         # 71
02415  7         MCS  TITAT       0274                                3976  Z 396 274     # 71
02420  1         W                                                    3983  2             # 71
02425  4         CS   0299                                            3984  / 299         # 72
02430  7         MCW  ITEMB       0230                                3988  M S6T 230     # 72
02435  7         A    C4          0094                                3995  A /8U 094     # 72
02440  4         B    SUB7                                            4002  B 17‡         # 72
```

```
02445  7        MCS TITBT      0274                          4006  Z 400 274     # 72
02450  1        W                                            4013  2             # 72
02455  4        CS  0299                                     4014  / 299         # 72
02460  7        MCW ITEMC      0230                          4018  M S6Z 230     # 72
02465  7        A   C8         0094                          4025  A /1X 094     # 73
02470  4        B   SUB7                                     4032  B 17‡         # 73
02475  7        MCS TITCT      0274                          4036  Z 404 274     # 73
02480  1        W                                            4043  2             # 73
02485  4        CS  0299                                     4044  / 299         # 73
02490  7        MCW ITEMD      0230                          4048  M S7V 230     # 73
02495  7        A   C12        0094                          4055  A ‡9T 094     # 73
02500  4        B   SUB7                                     4062  B 17‡         # 73
02505  7        MCS TITDT      0274                          4066  Z 408 274     # 74
02510  1        W                                            4073  2             # 74
02515  4        CS  0299                                     4074  / 299         # 74
02520  7        MCW EMPTY      0230                          4078  M S8/ 230     # 74
02525  7        A   C16        0094                          4085  A ‡9W 094     # 74
02530  4        B   SUB7                                     4092  B 17‡         # 74
02535  7        MCS TITET      0274                          4096  Z 412 274     # 74
02540  1        W                                            4103  2             # 74
02545  4        CS  0299                                     4104  / 299         # 75
02550  2        CC                         J                 4108  F J           # 75
02555  7        MCW NOOF       0229                          4110  M T1W 229     # 75
02560  7        MCW FISH       0234                          4117  M T2‡ 234     # 75
02565  7 SUB6A   MCS MTOTT    1 0243     2                   4124  Z 4/6 2M3     # 75
02570  7        A   C4         0089                          4131  A /8U 089     # 75
02575  7        A   C8         0094                          4138  A /1X 094     # 75
02580  7        C   0089       C16                           4145  C 089 ‡9W     # 76
02585  5        B   SUB6A                  /                 4152  B 12U /       # 76
02590  1        W                                            4157  2             # 76
02595  4        CS  0299                                     4158  / 299         # 76
02600  4        B   SUB2                                     4162  B M99         # 76
02605  4 EXIT6   B   0000                       END SUB SIX   4166  B 000         # 76
```

```
02610
02615
02620  4 SUB7   SBR EXIT7 &003                    SUBROUTINE A      4170  H 24V          # 76
02625  7 SUB7A  C   MITAP     2 ZEROS4             FOR EDITING       4174  C 7R2 /8Y      # 76
02630  5        B   SUB7B                    S                       4181  B 21S S        # 77
02635  7        C   MITAP     2 BLANKS-002                          4186  C 7R2 /5U      # 77
02640  5        B   SUB7B                    S                       4193  B 21S S        # 77
02645  7        LCA EDTWD1      0243      1                          4198  L T3/ 2U3      # 77
02650  7        MCE MITAP     2 0243      1                          4205  E 7R2 2U3      # 77
02655  7 SUB7B   A   C8          0089                                4212  A /1X 089      # 77
02660  7        A   C20         0094                                4219  A ‡9Z 094      # 78
02665  7        C   0089        C32                                 4226  C 089 /0Y      # 78
02670  5        B   SUB7A                    /                       4233  B 17U /        # 78
02675  4        B   SUB2                                             4238  B M99          # 78
02680  4 EXIT7   B   0000                         END SUB SEVEN      4242  B 000          # 78
02685
02690
02695  4 SUB8   SBR EXIT8 &003                    SUBROUTINE TO     4246  H 49W          # 78
02700  2        CC                           3   PRINT OUT TABLE   4250  F 3            # 78
02705  7        MCW TABLE2      0253             TWO               4252  M S4T 253      # 78
02710  1        W                                                   4259  2              # 79
02715  4        CS  0299                                            4260  / 299          # 79
02720  2        CC                           L                      4264  F L            # 79
02725  7        MCW MALE        0244                                4266  M S8W 244      # 79
02730  7        MCW FEM         0252                                4273  M S9/ 252      # 79
02735  7        MCW UNSEX       0259                                4280  M S9W 259      # 79
02740  7        MCW TOTAL       0267                                4287  M T0/ 267      # 79
02745  7        MCW NOOF        0274                                4294  M T1W 274      # 80
02750  7        MCW FISH        0279                                4301  M T2‡ 279      # 80
02755  1        W                                                   4308  2              # 80
02760  4        CS  0299                                            4309  / 299          # 80
02765  2        CC                           J                      4313  F J            # 80
```

```
02770  7        MCW  ITEMA       0230                          4315  M  S5X  230     # 80
02775  7        A    C80         0094                          4322  A  /2W  094     # 80
02780  4        B    SUB7                                      4329  B  17‡          # 80
02785  7        MCS  TITAD       0274                          4333  Z  480  274     # 81
02790  1        W                                              4340  2              # 81
02795  4        CS   0299                                      4341  /  299         # 81
02800  7        MCW  ITEMB       0230                          4345  M  S6T  230     # 81
02805  7        A    C84         0094                          4352  A  /2Z  094     # 81
02810  4        B    SUB7                                      4359  B  17‡          # 81
02815  7        MCS  TITBD       0274                          4363  Z  484  274     # 81
02820  1        W                                              4370  2              # 81
02825  4        CS   0299                                      4371  /  299         # 82
02830  7        MCW  ITEMC       0230                          4375  M  S6Z  230     # 82
02835  7        A    C88         0094                          4382  A  /3S  094     # 82
02840  4        B    SUB7                                      4389  B  17‡          # 82
02845  7        MCS  TITCD       0274                          4393  Z  488  274     # 82
02850  1        W                                              4400  2              # 82
02855  4        CS   0299                                      4401  /  299         # 82
02860  7        MCW  ITEMD       0230                          4405  M  S7V  230     # 82
02865  7        A    C92         0094                          4412  A  /3V  094     # 83
02870  4        B    SUB7                                      4419  B  17‡          # 83
02875  7        MCS  TITDD       0274                          4423  Z  492  274     # 83
02880  1        W                                              4430  2              # 83
02885  4        CS   0299                                      4431  /  299         # 83
02890  2        CC                            K                4435  F  K           # 83
02895  7        MCW  NOOF        0229                          4437  M  T1W  229     # 83
02900  7        MCW  FISH        0234                          4444  M  T2‡  234     # 83
02905  7  SUB8A  MCS  MTOTD     1 0243      2                  4451  Z  4Z6  2M3     # 84
02910  7        A    C4          0089                          4458  A  /8U  089     # 84
02915  7        A    C8          0094                          4465  A  /1X  094     # 84
02920  7        C    0089        C16                           4472  C  089  ‡9W     # 84
02925  5        B    SUB8A                         /           4479  B  45/  /       # 84
02930  1        W                                              4484  2              # 84
```

```
02935  4         CS   0299                                          4485  / 299          # 84
02940  4         B    SUB2                                          4489  B M99          # 85
02945  4 EXIT8   B    0000                        END SUB EIGHT     4493  B 000          # 85
02950
02955
02960  4 SUB9    SBR  EXIT9 &003                  SUBROUTINE TO     4497  H ‡4V          # 85
02965  2         CC                            2  PRINT TABLE       4501  F 2            # 85
02970  7         MCW  TABLE3       0254           THREE             4503  M S5/ 254      # 85
02975  1         W                                                   4510  2              # 85
02980  4         CS   0299                                          4511  / 299          # 85
02985  2         CC                            L                    4515  F L            # 85
02990  7         MCW  TOTAL        0213                             4517  M T0/ 213      # 86
02995  7         MCW  ITEMA        0229                             4524  M S5X 229      # 86
03000  7         MCW  ITEMB        0248                             4531  M S6T 248      # 86
03005  7         MCW  ITEMC        0267                             4538  M S6Z 267      # 86
03010  7         MCW  ITEMD        0286                             4545  M S7V 286      # 86
03015  7         MCW  NOOF         0298                             4552  M T1W 298      # 87
03020  1         W                                                   4559  2              # 87
03025  4         CS   0299                                          4560  / 299          # 87
03030  7         MCW  LENGTH       0214                             4564  M T2W 214      # 87
03035  7         MCW  FISH         0297                             4571  M T2‡ 297      # 87
03040  1         W                                                   4578  2              # 87
03045  4         CS   0299                                          4579  / 299          # 87
03050  7 SUB9A   MCW  MALE         0223        1                    4583  M S8W 2S3      # 87
03055  7         A    C19          0089                             4590  A U0X 089      # 88
03060  7         C    0089         C76                              4597  C 089 S1U      # 88
03065  5         B    SUB9A                     /                   4604  B 58T /        # 88
03070  7         SBR  0089         0000                             4609  H 089 000      # 88
03075  7 SUB9B   MCW  FEM          0229        1                    4616  M S9/ 2S9      # 88
03080  7         A    C19          0089                             4623  A U0X 089      # 88
03085  7         C    0089         C76                              4630  C 089 S1U      # 89
03090  5         B    SUB9B                     /                   4637  B 61W /        # 89
03095  7         SBR  0089         0000                             4642  H 089 000      # 89
```

```
03100  7 SUB9C  MCW UNSEX        0234       1                    4649  M S9W 2T4      # 89
03105  7        A   C19          0089                            4656  A U0X 089      # 89
03110  7        C   0089         C76                             4663  C 089 S1U      # 89
03115  5        B   SUB9C                     /                  4670  B 64Z /        # 90
03120  7        SBR 0089         0000                            4675  H 089 000      # 90
03125  1        W                                                4682  2              # 90
03130  4        CS  0299                                         4683  / 299          # 90
03135  2        CC                            J                  4687  F J            # 90
03140  7 SUB9X  MCW LENG1      1 0215                            4689  M TTY 215      # 90
03145  7 SUB9XA C   0936       3 BLANKS-002                      4696  C 9C6 /5U      # 90
03150  5        B   *      &015               S                  4703  B 72S S        # 90
03155  7        LCA EDTWD1       0222       2                    4708  L T3/ 2K2      # 91
03160  7        MCE 0936       3 0222       2                    4715  E 9C6 2K2      # 91
03165  7        A   C40          0099                            4722  A /2T 099      # 91
03170  7        A   C19          0094                            4729  A U0X 094      # 91
03175  7        C   0094         C76                             4736  C 094 S1U      # 91
03180  5        B   SUB9XA                    /                  4743  B 69W /        # 91
03185  7        SBR 0094         0000                            4748  H 094 000      # 92
03190  7        S   C160         0099                            4755  S U0U 099      # 92
03195  7        MZ  ZONES        0099                            4762  Y /6/ 099      # 92
03200  7 SUB9XB C   1096       3 BLANKS-002                      4769  C ‡I6 /5U      # 92
03205  5        B   *      &015               S                  4776  B 79V S        # 92
03210  7        LCA EDTWD1       0228       2                    4781  L T3/ 2K8      # 92
03215  7        MCE 1096       3 0228       2                    4788  E ‡I6 2K8      # 93
03220  7        A   C40          0099                            4795  A /2T 099      # 93
03225  7        A   C19          0094                            4802  A U0X 094      # 93
03230  7        C   0094         C76                             4809  C 094 S1U      # 93
03235  5        B   SUB9XB                    /                  4816  B 76Z /        # 93
03240  7        SBR 0094         0000                            4821  H 094 000      # 93
03245  7        S   C160         0099                            4828  S U0U 099      # 94
03250  7        MZ  ZONES        0099                            4835  Y /6/ 099      # 94
03255  7 SUB9XC C   1256       3 BLANKS-002                      4842  C SE6 /5U      # 94
03260  5        B   *      &015               S                  4849  B 86Y S        # 94
```

```
03265  7         LCA EDTWD1      0234      2                    4854  L T3/ 2L4     # 94
03270  7         MCE 1256      3 0234      2                    4861  E SE6 2L4     # 94
03275  7         A   C40         0099                           4868  A /2T 099     # 95
03280  7         A   C19         0094                           4875  A U0X 094     # 95
03285  7         C   0094        C76                            4882  C 094 S1U     # 95
03290  5         B   SUB9XC                    /                4889  B 84S /       # 95
03295  7         SBR 0094        0000                           4894  H 094 000     # 95
03300  7         S   C160        0099                           4901  S U0U 099     # 95
03305  7         MZ  ZONES       0099                           4908  Y /6/ 099     # 96
03310  4         B   SUB9Z                                      4915  B ‡4W         # 96
03315  1         W                                              4919  2             # 96
03320  4         CS  0299                                       4920  / 299         # 96
03325  7         A   C7          0089                           4924  A U1‡ 089     # 96
03330  7         A   C4          0099                           4931  A /8U 099     # 96
03335  7         C   0089        C70                            4938  C 089 U1T     # 96
03340  5         B   SUB9X                     /                4945  B 68Z /       # 97
03345  2         CC                            J                4950  F J           # 97
03350  7         MCW NOOF        0213                           4952  M T1W 213     # 97
03355  4         B   SUB2                                       4959  B M99         # 97
03360  7 SUB9Y   MCS MITAD     1 0221      2                    4963  Z 4T2 2K1     # 97
03365  7         A   C4          0089                           4970  A /8U 089     # 97
03370  7         A   C19         0094                           4977  A U0X 094     # 97
03375  7         C   0094        C76                            4984  C 094 S1U     # 98
03380  5         B   SUB9Y                     /                4991  B 96T /       # 98
03385  7         S   C70         0094                           4996  S U1T 094     # 98
03390  7         MZ  ZONES       0094                           5003  Y /6/ 094     # 98
03395  7         A   C6          C76                            5010  A /1U S1U     # 98
03400  7         C   0089        C48                            5017  C 089 /7V     # 98
03405  5         B   SUB9Y                     /                5024  B 96T /       # 99
03410  1         W                                              5029  2             # 99
03415  4         CS  0299                                       5030  / 299         # 99
03420  7         MCW FISH        0212                           5034  M T2‡ 212     # 99
03425  1         W                                              5041  2             # 99
```

```
03430  4 EXIT9  B   0000                                    5042  B 000          # 99
03435
03440
03445  4 SUB9Z  SBR EXIT9Z&003          SUBROUTINE FOR     5046  H ‡8Z          # 99
03450  4        SW  0294                NUMBER OF FISH     5050  , 294          # 99
03455  4        SW  0294                BY TOTAL LENGTH    5054  , 294          #100
03460  7        A   0672      3 0297                       5058  A 6G2 297       #100
03465  7        A   0712      3 0297                       5065  A 7A2 297       #100
03470  7        A   0752      3 0297                       5072  A 7E2 297       #100
03475  7        MCS 0297        0297                       5079  Z 297 297       #100
03480  4 EXIT9Z B   0000                END SUB NINE Z     5086  B 000          #100
03485
03490
03495  1 ONE    DCW *           1                          5090    DCW          #100
03500  3 C12    DCW *           012                        5093    DCW          #100
03505  3 C16    DCW *           016                        5096    DCW          #101
03510  3 C20    DCW *           020                        5099    DCW          #101
03515  3 C24    DCW *           024                        5102    DCW          #101
03520  3 C28    DCW *           028                        5105    DCW          #101
03525  3 C32    DCW *           032                        5108    DCW          #101
03530  3 C36    DCW *           036                        5111    DCW          #101
03535  3 C6     DCW *           006                        5114    DCW          #101
03540  3 C8     DCW *           008                        5117    DCW          #101
03545  3 C9     DCW *           009                        5120    DCW          #102
03550  3 C40    DCW *           040                        5123    DCW          #102
03555  3 C80    DCW *           080                        5126    DCW          #102
03560  3 C84    DCW *           084                        5129    DCW          #102
03565  3 C88    DCW *           088                        5132    DCW          #102
03570  3 C92    DCW *           092                        5135    DCW          #102
03575  3 C120   DCW *           120                        5138    DCW          #102
03580  3 C212   DCW *           212                        5141    DCW          #102
03585  3 C248   DCW *           248                        5144    DCW          #103
03590  3 FORU   DCW *                                      5147    DCW          #103
```

```
03595  3 C101   DCW *          101                    5150   DCW        #103
03600  6 BLANKS DCW *                                 5156   DCW        #103
03605  1 A      DCW *          A                      5157   DCW        #103
03610  1 B      DCW *          B                      5158   DCW        #103
03615  1 CCNTR1 DCW *                                 5159   DCW        #103
03620  1 FOUR   DCW *          4                      5160   DCW        #103
03625  1 ZONES  DCW *                                 5161   DCW        #104
03630  1 ZEROS1 DCW *          0                      5162   DCW        #104
03635  4 MTOTT  DCW 0416                              0416   DCW        #105
03640  4 K1     DCW *          0001                   5166   DCW        #106
03645  3 C176   DCW *          176                    5169   DCW        #106
03650  3 C64    DCW *          064                    5172   DCW        #106
03655  3 C48    DCW *          048                    5175   DCW        #106
03660  3 ZEROS3 DCW *          000                    5178   DCW        #106
03665  4 FTOTT  DCW 0420                              0420   DCW        #107
03670  4 UTOTT  DCW 0424                              0424   DCW        #107
03675  4 TTOTT  DCW 0428                              0428   DCW        #107
03680  4 MITAT  DCW 0336                              0336   DCW        #108
03685  3 C3     DCW *          003                    5181   DCW        #109
03690  3 C4     DCW *          004                    5184   DCW        #109
03695  4 MITET  DCW 0352                              0352   DCW        #110
03700  4 MITAC  DCW 0432                              0432   DCW        #111
03705  4 MTOTC  DCW 0496                              0496   DCW        #112
03710  4 TTOTD  DCW 0508                              0508   DCW        #113
03715  4 MITBC  DCW 0436                              0436   DCW        #114
03720  4 MITCD  DCW 0440                              0440   DCW        #114
03725  4 MITDC  DCW 0444                              0444   DCW        #114
03730  4 TL100A DCW 0512                              0512   DCW        #115
03735  4 TL100M DCW 0672                              0672   DCW        #116
03740  4 ZEROS4 DCW *                                 5188   DCW        #117
03745 13 DIVIS1 DCW *                                 5201   DCW        #117
03750  4 ZEROX4 DCW *          &000&                  5205   DCW        #117
03752  3 C150   DCW *          150                    5208   DCW        #117
```

```
03755  3 C5      DCW *          005                    5211   DCW        #117
03760  4 MITAP   DCW 0792                              0792   DCW        #118
03765  3 C76     DCW *          076                    5214   DCW        #119
03770  3 C60     DCW *          060                    5217   DCW        #119
03775  3 C296    DCW *          296                    5220   DCW        #119
03780  3 C1080   DCW *          ‡80                    5223   DCW        #119
03785  3 C404    DCW *          404                    5226   DCW        #119
03790  3 C408    DCW *          408                    5229   DCW        #119
03795  4 TITAT   DCW 0396                              0396   DCW        #120
03800  4 TITAP   DCW 0852                              0852   DCW        #121
03805  4 TITAC   DCW 0480                              0480   DCW        #122
03810  4 TITAPD  DCW 0920                              0920   DCW        #123
03815  7 TABLE1  DCW *          TABLE 1                5236   DCW        #124
03820  7 TABLE2  DCW *          TABLE 2                5243   DCW        #124
03825  8 TABLE3  DCW *          TABLE 3                5251   DCW        #124
03830  6 ITEMA   DCW *          ITEM A                 5257   DCW        #124
03835  6 ITEMB   DCW *          ITEM B                 5263   DCW        #124
03840  6 ITEMC   DCW *          ITEM C                 5269   DCW        #124
03845  6 ITEMD   DCW *          ITEM D                 5275   DCW        #125
03850  6 EMPTY   DCW *          EMPTY                  5281   DCW        #125
03855  5 MALE    DCW *          MALE                   5286   DCW        #125
03860  5 FEM     DCW *          FEM                    5291   DCW        #125
03865  5 UNSEX   DCW *          UNSEX                  5296   DCW        #125
03870  5 TOTAL   DCW *          TOTAL                  5301   DCW        #125
03875  5 FORK    DCW *          FORK                   5306   DCW        #125
03880  5 STAND   DCW *          STAND                  5311   DCW        #126
03885  5 NCOF    DCW *          NO OF                  5316   DCW        #126
03890  4 FISH    DCW *          FISH                   5320   DCW        #126
03895  6 LENGTH  DCW *          LENGTH                 5326   DCW        #126
03900  5 EDTWD1  DCW *           0 .                   5331   DCW        #126
03905  4 TITBT   DCW 0400                              0400   DCW        #127
03910  4 TITCT   DCW 0404                              0404   DCW        #127
03915  4 TITDT   DCW 0408                              0408   DCW        #127
```

```
03920  4 TITET   DCW 0412                                    0412   DCW     #127
03925  4 MITBT   DCW 0340                                    0340   DCW     #128
03930  7 LENG1   DCW *          001-100                  **  5338   DCW     #129
03935  7 LENG2   DCW *          101-200                   *  5345   DCW     #129
03940  7 LENG3   DCW *          201-300                   L  5352   DCW     #129
03945  7 LENG4   DCW *          301-400                   I  5359   DCW     #129
03950  7 LENG5   DCW *          401-500                   N  5366   DCW     #129
03955  7 LENG6   DCW *          501-600                   K  5373   DCW     #130
03960  7 LENG7   DCW *          601-700                   E  5380   DCW     #130
03965  7 LENG8   DCW *          701-800                   D  5387   DCW     #130
03970  7 LENG9   DCW *          801-900                   *  5394   DCW     #130
03975  7 LENG10  DCW *          901-999                  **  5401   DCW     #130
03980  3 C160    DCW *          160                          5404   DCW     #130
03985  3 C19     DCW *          019                          5407   DCW     #130
03990  3 C7      DCW *          007                          5410   DCW     #131
03995  3 C70     DCW *          070                          5413   DCW     #131
04000  4 TITBD   DCW 0484                                    0484   DCW     #132
04005  4 TITCD   DCW 0488                                    0488   DCW     #132
04010  4 TITDD   DCW 0492                                    0492   DCW     #132
04015  3 C20A    DCW *          020                          5416   DCW     #133
04020  3 C112A   DCW *          112                          5419   DCW     #133
04025  3 C336    DCW *          336                          5422   DCW     #133
04030  3 C200    DCW *          200                          5425   DCW     #133
04035  3 C128    DCW *          128                          5428   DCW     #133
04040  3 C144    DCW *          144                          5431   DCW     #133
04045  3 C100    DCW *          100                          5434   DCW     #133
04050  3 C376    DCW *          376                          5437   DCW     #133
04055  3 C0A     DCW *          000                          5440   DCW     #134
04060  3 C192    DCW *          192                          5443   DCW     #134
04065  3 C300    DCW *          300                          5446   DCW     #134
04070  3 C400    DCW *          400                          5449   DCW     #134
04075  3 C500    DCW *          500                          5452   DCW     #134
04080  3 C600    DCW *          600                          5455   DCW     #134
```

```
04085  3 C700    DCW *          700
04090  3 C800    DCW *          800
04095  3 C900    DCW *          900
04100  7 LENGA   DCW *          001-050
04105  7 LENGB   DCW *          051-100
04110  7 LENGC   DCW *          101-150
04115  7 LENGD   DCW *          151-200
04120  7 LENGE   DCW *          201-250
04125  7 LENGF   DCW *          251-300
04130  7 LENGG   DCW *          301-350
04135  7 LENGH   DCW *          351-400
04140  7 LENGI   DCW *          401-450
04145  7 LENGJ   DCW *          451-500
04150  3 C51     DCW *          051
04155  3 C250    DCW *          250
04160  3 C350    DCW *          350
04165  3 C450    DCW *          450
04170  7 LENGK   DCW *          001-025
04175  7 LENGL   DCW *          026-050
04180  7 LENGM   DCW *          051-075
04185  7 LENGN   DCW *          076-100
04190  7 LENGO   DCW *          101-125
04195  7 LENGP   DCW *          126-150
04200  7 LENGQ   DCW *          151-175
04205  7 LENGR   DCW *          176-200
04210  7 LENGS   DCW *          201-225
04215  7 LENGT   DCW *          226-250
04220  3 C26     DCW *          026
04225  3 C50     DCW *          050
04230  3 C75     DCW *          075
04235  3 C125    DCW *          125
04240  3 C175    DCW *          175
04245  3 C225    DCW *          225
```



```
     5458    DCW        #134
     5461    DCW        #134
     5464    DCW        #135
**   5471    DCW        #135
*    5478    DCW        #135
L    5485    DCW        #135
I    5492    DCW        #135
N    5499    DCW        #135
K    5506    DCW        #136
E    5513    DCW        #136
D    5520    DCW        #136
*    5527    DCW        #136
**   5534    DCW        #136
     5537    DCW        #136
     5540    DCW        #136
     5543    DCW        #137
     5546    DCW        #137
**   5553    DCW        #137
*    5560    DCW        #137
L    5567    DCW        #137
I    5574    DCW        #137
N    5581    DCW        #137
K    5588    DCW        #138
E    5595    DCW        #138
D    5602    DCW        #138
*    5609    DCW        #138
**   5616    DCW        #138
     5619    DCW        #138
     5622    DCW        #138
     5625    DCW        #139
     5628    DCW        #139
     5631    DCW        #139
     5634    DCW        #139
```

```
04250  1 TAGONE DCW *          *                          5635    DCW          #139
04255  7 ERROR1 H   0001       0001                       5636  . 001 001      #139
04260
04265
04270           END INIT                                        / U13 080      #140
                                     854 -CARDS
                                     265 -SYMBOLS
```

PAGE# 28

ALPHA SYMBOL TABLE # 1

	A	5157
	B	5158
	BLANKS	5156
	B010	1522
*	B020	1545
*	B099	1572
	B100	1587
	B100A	1713
	B100B	1928
	B101A	1737
	B105B	1944
	B110	1602
*	B110A	1751
*	B110B	1958
*	B200	1631
*	B200A	1794
*	B200B	2001
	B250	1671
	B250A	1830
	B250B	2025
	B500	2114
	B550	2172
	CONTR1	5159
	C0A	5440
	C100	5434
	C101	5150
	C1080	5223
	C112A	5419
	C12	5093
	C120	5138

PAGE# 29

ALPHA SYMBOL TABLE # 2

C125	5628
C128	5428
C144	5431
C150	5208
C16	5096
C160	5404
C175	5631
C176	5169
C19	5407
C192	5443
C20	5099
C20A	5416
C200	5425
C212	5141
C225	5634
C24	5102
C248	5144
C250	5540
C26	5619
C28	5105
C296	5220
C3	5181
C300	5446
C32	5108
C336	5422
C350	5543
C36	5111
C376	5437
C4	5184
C40	5123

PAGE# 30

ALPHA SYMBOL TABLE # 3

C400	5449
C404	5226
C408	5229
C450	5546
C48	5175
C5	5211
C50	5622
C500	5452
C51	5537
C6	5114
C60	5217
C600	5455
C64	5172
C7	5410
C70	5413
C700	5458
C75	5625
C76	5214
C8	5117
C80	5126
C800	5461
C84	5129
C88	5132
C9	5120
C900	5464
C92	5135
DIVIS1	5201
EDTWD1	5331
EMPTY	5281
ERROR1	5636

PAGE# 31

ALPHA SYMBOL TABLE # 4

	EXIT1	2495
	EXIT2	2518
	EXIT2V	2579
	EXIT2W	2640
	EXIT2X	2725
	EXIT2Y	2810
	EXIT2Z	2851
	EXIT3	3509
	EXIT4	3724
	EXIT4X	3760
	EXIT5	3892
	EXIT6	4166
	EXIT7	4242
	EXIT8	4493
	EXIT9	5042
	EXIT9Z	5086
	FEM	5291
*	FINISH	2253
	FISH	5320
	FORK	5306
	FORU	5147
	FOUR	5160
	FTOTT	0420
	INIT	1413
	ITEMA	5257
	ITEMB	5263
	ITEMC	5269
	ITEMD	5275
	K1	5166
	LENGA	5471

PAGE# 32

ALPHA SYMBOL TABLE # 5

*	LENGB	5478
*	LENGC	5485
*	LENGD	5492
*	LENGE	5499
*	LENGF	5506
*	LENGG	5513
*	LENGH	5520
*	LENGI	5527
*	LENGJ	5534
	LENGK	5553
*	LENGL	5560
*	LENGM	5567
*	LENGN	5574
*	LENGO	5581
*	LENGP	5588
*	LENGQ	5595
*	LENGR	5602
*	LENGS	5609
*	LENGT	5616
	LENGTH	5326
	LENG1	5338
*	LENG10	5401
*	LENG2	5345
*	LENG3	5352
*	LENG4	5359
*	LENG5	5366
*	LENG6	5373
*	LENG7	5380
*	LENG8	5387
*	LENG9	5394

PAGE# 33

ALPHA SYMBOL TABLE # 6

MALE	5286
MITAD	0432
MITAP	0792
MITAT	0336
MITBD	0436
MITBT	0340
MITCD	0440
MITDD	0444
MITET	0352
MTOTD	0496
MTOTT	0416
NOOF	5316
ONE	5090
STAND	5311
SUB1	2260
SUB1A	2297
SUB1B	2323
SUB1C	2391
SUB1D	2309
SUB1F	2440
SUB1G	2477
SUB1H	2491
SUB1T	2316
SUB1X	2356
SUB1Y	2375
SUB2	2499
SUB2V	2522
SUB2W	2583
SUB2X	2644
SUB2Y	2729

PAGE# 34

ALPHA SYMBOL TABLE # 7

SUB2Z	2814
SUB3	2855
SUB3A	2917
SUB3AA	2964
SUB3AB	2980
SUB3B	2929
SUB3BA	2996
SUB3BX	2906
SUB3CA	3012
SUB3CB	3044
SUB3CC	3076
SUB3CD	3108
SUB3D	2992
SUB3DA	3144
SUB3DB	3159
SUB3DC	3181
SUB3DD	3203
SUB3E	2871
SUB3NO	3140
SUB3TL	3225
SUB3T0	3477
SUB3T3	3267
SUB3T4	3297
SUB3T5	3327
SUB3T6	3357
SUB3T7	3387
SUB3T8	3417
SUB3T9	3447
SUB3X	3491
SUB4	3513

PAGE# 35

ALPHA SYMBOL TABLE # 8

SUB4A	3529
SUB4B	3594
SUB4C	3608
SUB4D	3645
SUB4E	3710
SUB4X	3728
SUB4XA	3732
SUB4XB	3739
SUB5	3764
SUB5A	3768
SUB5B	3815
SUB6	3896
SUB6A	4124
SUB7	4170
SUB7A	4174
SUB7B	4212
SUB8	4246
SUB8A	4451
SUB9	4497
SUB9A	4583
SUB9B	4616
SUB9C	4649
SUB9X	4689
SUB9XA	4696
SUB9XB	4769
SUB9XC	4842
SUB9Y	4963
SUB9Z	5046
TABLE1	5236
TABLE2	5243
TABLE3	5251

PAGE# 36

ALPHA SYMBOL TABLE # 9

TAGONE	5635
TITAD	0480
TITAP	0852
TITAPD	0920
TITAT	0396
TITBD	0484
TITBT	0400
TITCD	0488
TITCT	0404
TITDD	0492
TITDT	0408
TITET	0412
TL100A	0512
TL100M	0672
TOTAL	5301
TTOTD	0508
TTOTT	0428
UNSEX	5296
UTOTT	0424
ZEROS1	5162
ZEROS3	5178
ZEROS4	5188
ZEROX4	5205
ZONES	5161

```
00010            ORG 1559                                                ORG V59
00015
00020             PROGRAM 00002
00025
00030             PROGRAM TO CALCULATE AND PRINT TABLES 4 TO 14
00035             INCLUDING A AND B VERSIONS
00040
00045             PROGRAMMER ROSS B.J. MACNAB
00050             JANUARY 1963
00055
00060
00065             THIS IS THE FINAL PHASE OF THE PROGRAM AND IS
00070             PLACED ON TAPE 2 TO BE RECALLED LATER
00075
00080  5 OLAY    CU  %U2                     R   ROUTINE TO WRITE  1559  U %U2 R        #  4
00085  8         LCA %U2         1559        W   LAST PART OF      1564  L %U2 V59 W    #  4
00090  5         B   OLAYA                   L   PROGRAM ON TAPE   1572  B V81 L        #  4
00095  4         B   OLAYB                                         1577  B W09          #  4
00100  5 CLAYA    CU  %U2                     R                     1581  U %U2 R        #  4
00105  7         A   C1          COUNT1                            1586  A B9V C3Y      #  4
00110  7         C   COUNT1      C10                               1593  C C3Y C2S      #  4
00115  5         B   ERROR5                  S                     1600  B H9X S        #  5
00120  4         B   OLAY                                          1605  B V59          #  5
00125  5 OLAYB    CU  %U2                     M   END OF ROUTINE    1609  U %U2 M        #  5
00130  5         CU  %U2                     R   TO WRITE LAST     1614  U %U2 R        #  5
00135  7         SBR COUNT1      0000            PART OF PROGRAM   1619  H C3Y 000      #  5
00140  4         B   EXOLAY                      ON TAPE           1626  B 51W          #  5
00145
00150
00155  5 B699    B   SUB2T                   B   WHICH INTERVAL    1630  B P39 B        #  5
00160  5         B   SUB2U                   C   WHICH INTERVAL    1635  B Q24 C        #  5
00165  4 B700    B   TAPER                       READ A TAPE CARD  1640  B L7/          #  6
00170  5         B   B720                    K   LAST CARD         1644  B Y83 K        #  6
```

```
00175  7        SBR B708  &006  TL100M                          1649  H Y24 422     #  6
00180  7        SBR B710  &006  NO100M                         1656  H Y38 698     #  6
00185  7        SBR B713  &006  AGE1M                          1663  H Y60 926     #  6
00190  7        SBR B715  &006  NAGE1M                         1670  H Y74 S86     #  6
00195  8        B   B705        0010        0   MALE           1677  B X61 010 0   #  7
00200  7        SBR B708  &006  TL100F                         1685  H Y24 502     #  7
00205  7        SBR B710  &006  NO100F                         1692  H Y38 738     #  7
00210  7        SBR B713  &006  AGE1F                          1699  H Y60 ‡30     #  7
00215  7        SBR B715  &006  NAGE1F                         1706  H Y74 T38     #  7
00220  8        B   B705        0010        1   FEMALE         1713  B X61 010 1   #  8
00225  7        SBR B708  &006  TL100U                         1721  H Y24 582     #  8
00230  7        SBR B710  &006  NO100U                         1728  H Y38 778     #  8
00235  7        SBR B713  &006  AGE1U                          1735  H Y60 /34     #  8
00240  7        SBR B715  &006  NAGE1U                         1742  H Y74 T90     #  8
00245  8        B   B705        0010            UNSEXED        1749  B X61 010     #  9
00250  4        B   ERROR4                      KP ERROR IN 10 1757  B H9‡         #  9
00255  7 B705   MZ  ZONE0       B708  &005                     1761  Y C3U Y23     #  9
00260  7        MZ  ZONE0       B713  &005                     1768  Y C3U Y59     #  9
00265  7        MZ  ZONE11      B710  &005                     1775  Y C3V Y37     #  9
00270  7        MZ  ZONE11      B715  &005                     1782  Y C3V Y73     #  9
00275  7 B706   MCW 0014        KLENG                          1789  M 014 &4Z     # 10
00280  7        MCW 0024        KWEIGT                         1796  M 024 &5T     # 10
00285  4        B   SUB4                       CALC CONDITION 1803  B K8V         # 10
00290  4        B   SUB8T                      LENGTH INTERVAL 1807 B B61         # 10
00295  7 B707   A   CONDIT      TL100T    1                    1811  A &5W 3U2     # 10
00300  7 B708   A   CONDIT      TL100M    1                    1818  A &5W 4S2     # 10
00305  7 B709   A   C1          NO100T    2                    1825  A B9V 6N8     # 11
00310  7 B710   A   C1          NO100M    2                    1832  A B9V 6R8     # 11
00315  4        B   SUB3X                      ZERO INDEX REGS 1839 B M9Z         # 11
00320  4        B   SUB8U                      SET REGS FOR AGE 1843 B F88        # 11
00325  7 B712   A   CONDIT      AGE1T     1                    1847  A &5W 8S2     # 11
00330  7 B713   A   CONDIT      AGE1M     1                    1854  A &5W 9S6     # 11
```

```
00335  7 B714   A   C1          NAGE1T    2                          1861  A B9V SL4     # 12
00340  7 B715   A   C1          NAGE1M    2                          1868  A B9V SQ6     # 12
00345  4        B   SUB3X                          ZERO INDEX REGS   1875  B M9Z         # 12
00350  4        B   B700                           TO READ TAPE CD   1879  B W40         # 12
00355  5 B720   CU  %U1                       R                      1883  U %U1 R       # 12
00360  4        B   SUB8                           PRINT TABLE 8     1888  B R09         # 12
00365  7        SBR SUB8  &013  TABLE9                              1892  H R22 G1W     # 12
00370  7        SBR SUB8A -001  0212                                1899  H R74 212     # 13
00375  7        SBR SUB8A -004  TAGE                                1906  H R71 01U     # 13
00380  7        MCW NOP         SUB8B -007                          1913  M G1X &20     # 13
00385  7        SBR SUB8C &006  0212                                1920  H &80 212     # 13
00390  7        SBR SUB8C &003  C1                                  1927  H &77 B9V     # 13
00395  7        MCW MCS         SUB8C                               1934  M G1Y &74     # 14
00400  7        SBR SUB8D &003  NAGE1T                              1941  H &84 S34     # 14
00405  4        SBR SUB8D &029                                      1948  H A10         # 14
00410  4        SBR SUB8E -008                                      1952  H A42         # 14
00415  7        MZ  ZONE11      SUB8D &002                          1956  Y C3V &83     # 14
00420  7        MZ  ZONE11      SUB8D &028                          1963  Y C3V A09     # 14
00425  7        MZ  ZONE11      SUB8E -009                          1970  Y C3V A41     # 15
00430  7        SBR SUB8D &022  AGE1T                               1977  H A03 822     # 15
00435  7        MZ  ZONE0       SUB8D &021                          1984  Y C3U A02     # 15
00440  7        SBR SUB8E &003  C52                                 1991  H A53 F9W     # 15
00445  7        SBR SUB8E &010  C104                                1998  H A60 F9Z     # 15
00450  7        SBR SUB8E &027  C208A                               2005  H A77 G0S     # 16
00455  7        SBR SUB8F &003  C204                                2012  H A91 G0V     # 16
00460  7        SBR SUB8F &010  C408                                2019  H A98 G0Y     # 16
00465  7        SBR SUB8F &041  C48                                 2026  H B29 120     # 16
00470  7        SBR SUB8F &050  C3                                  2033  H B38 C0/     # 16
00475  7        SBR SUB8G -005  C208A                               2040  H B48 G0S     # 17
00480  4        B   SUB8                           PRINT TABLE 9     2047  B R09         # 17
00485  4        B   SUB3B                          HEADING TABLE 10  2051  B E35         # 17
00490  4        CS  1558                           CLEAR TABULATION  2055  / V58         # 17
00495  1        CS                                 AREA              2059  /             # 17
```

```
00500  1          CS                                                  2060  /                 # 17
00505  1          CS                                                  2061  /                 # 17
00510  1          CS                                                  2062  /                 # 17
00515  1          CS                                                  2063  /                 # 18
00520  1          CS                                                  2064  /                 # 18
00525  1          CS                                                  2065  /                 # 18
00530  1          CS                                                  2066  /                 # 18
00535  1          CS                                                  2067  /                 # 18
00540  1          CS                                                  2068  /                 # 18
00545  1          CS                                                  2069  /                 # 18
00550  1          CS                                                  2070  /                 # 18
00555  7 B750     SW   0335       1 1151       2     SET WORD MARKS   2071  , 3T5 /N1        # 19
00560  7          A    C8           0089             IN NEW TAB AREA  2078  A C1W 089        # 19
00565  7          A    C4           0094                              2085  A COU 094        # 19
00570  7          C    0094         C408                              2092  C 094 GOY        # 19
00575  5          B    B750                      /                   2099  B -71 /          # 19
00580  4          B    SUB3X                            ZERO INDEX REGS 2104  B M9Z          # 19
00585  4 B800     B    TAPER                            READ A TAPE CARD 2108  B L7/          # 19
00590  5          B    B820                      K      LAST CARD     2112  B N94 K          # 20
00595  8          B    B802         SWITCH       A                    2117  B J87 H3Y A      # 20
00600  8          NCP  B801         0010         0      MALE          2125  N J37 010 0      # 20
00605  4          NOP  B800                                           2133  N J08            # 20
00610  7 B801     SBR  B811  &006   TAGE1                            2137  H N00 342        # 20
00615  7          SBR  B811  &013   NTAGE1                           2144  H N07 /54        # 20
00620  7          SBR  B812  &006   TLAGE1                           2151  H L94 966        # 21
00625  7          SBR  B812  &013   NLAGE1                           2158  H M01 U66        # 21
00630  7          SBR  B813  &006   CLAGE1                           2165  H N14 ‡62        # 21
00635  7          SBR  B813  &013   NCAGE1                           2172  H N21 V14        # 21
00640  4          B    SUB8V                            AGE ADJUSTMENT 2179  B G73          # 21
00645  4          B    B805                                           2183  B K33            # 21
00650  7 B802     MCW  SBR          B806  &007          SET UP FOR   2187  M H6Y K75        # 22
00655  7          MCW  SBR          B806  &014          INDIVIDUAL SEX 2194  M H6Y K82        # 22
```

```
00660  7        MCW SBR          B807  &007      Y INTERCEPT        2201  M H6Y L00      # 22
00665  7        MCW SBR          B807  &014      CORRECTION         2208  M H6Y L07      # 22
00670  7        MCW SBR          B808  &007      FACTORS IN TABLE   2215  M H6Y L25      # 22
00675  7        MCW SBR          B808  &014      10 ETC             2222  M H6Y L32      # 23
00680  4        B   B800  &017                                      2229  B J25          # 23
00685  7 B805    MCS 0007         0213                              2233  Z 007 213      # 23
00690  8        B   B806         0010        0   MALE               2240  B K68 010 0    # 23
00695  8        B   B807         0010        1   FEMALE             2248  B K93 010 1    # 23
00700  8        B   B808         0010            UNSEXED            2256  B L18 010      # 24
00705  4        B   ERROR4                      KP ERROR IN 10     2264  B H9‡          # 24
00710  7 B806    MCW MALE         0221                              2268  M R5/ 221      # 24
00715  7        NOP B810  &017   ALFAM                             2275  N M19 D4U      # 24
00720  7        NOP B811  -018   ALFAM                             2282  N M76 D4U      # 24
00725  4        B   B809                                           2289  B L39          # 24
00730  7 B807    MCW FEM          0221                              2293  M R5W 221      # 25
00735  7        NOP B810  &017   ALFAF                             2300  N M19 D5S      # 25
00740  7        NOP B811  -018   ALFAF                             2307  N M76 D5S      # 25
00745  4        B   B809                                           2314  B L39          # 25
00750  7 B808    MCW UNSEX        0221                              2318  M R6/ 221      # 25
00755  7        NOP B810  &017   ALFAU                             2325  N M19 D6‡      # 25
00760  7        NOP B811  -018   ALFAU                             2332  N M76 D6‡      # 26
00765  7 B809    MCS 0009         0226                              2339  Z 009 226      # 26
00770  7        MCS 0014         0233                              2346  Z 014 233      # 26
00775  7        MCS 0065         0297                              2353  Z 065 297      # 26
00780  7        ZA  0009         MAREA2-029                        2360  & 009 &8Y      # 26
00785  7        M   C3           MAREA2-025                        2367  @ C0/ &9S      # 27
00790  7        MZ  ZONES        MAREA2-025                        2374  Y C3T &9S      # 27
00795  7        MCW MAREA2-025   CAGE                              2381  M &9S G4V      # 27
00800  7 B812    A   0014         TLAGE1                            2388  A 014 966      # 27
00805  7        A   C1           NLAGE1                            2395  A B9V U66      # 27
00810  7 B810    ZA  ZEROX        WORKER                            2402  & &6T G4S      # 28
00815  7        MCW 0014         WORKER-005                        2409  M 014 G3X      # 28
```

```
00820  7        S    ALFAT        WORKER                                2416  S D3W G4S     # 28
00825  7        ZA   ZEROX        DIVIS3-032                            2423  & &6T A9T     # 28
00830  7        MCW  0030       1 DIVIS3-038                            2430  M 0T0 A8X     # 28
00835  7        D    0027         DIVIS3-040                            2437  % 027 A8V     # 29
00840  7        A    C5           DIVIS3-036                            2444  A C0X A8Z     # 29
00845  4        SW   DIVIS3-041                                         2451  , A8U         # 29
00850  7        ZA   DIVIS3-037   MAREA2-026                            2455  & A8Y &9/     # 29
00855  4        CW   DIVIS3-041                                         2462  ¤ A8U         # 29
00860  7        M    WORKER       MAREA2-016                            2466  @ G4S A0/     # 29
00865  7        A    ALFAT        MAREA2-021                            2473  A D3W &9W     # 30
00870  7        A    C5           MAREA2-025                            2480  A C0X &9S     # 30
00875  7        MCS  MAREA2-026   0238      2                           2487  Z &9/ 2L8     # 30
00880  7 B811   A    MAREA2-026   TAGE1                                2494  A &9/ 342     # 30
00885  7        A    C1           NTAGE1                                2501  A B9V /54     # 30
00890  7 B813   A    MAREA2-026   CLAGE1                               2508  A &9/ ‡62     # 31
00895  7        A    C1           NCAGE1                                2515  A B9V V14     # 31
00900  7        A    C3           0089                                  2522  A C0/ 089     # 31
00905  7        A    C5           0094                                  2529  A C0X 094     # 31
00910  7        MA   C8           B811  &006                            2536  # C1W N00     # 31
00915  7        MA   C8           B813  &006                            2543  # C1W N14     # 32
00920  7        MA   C4           B811  &013                            2550  # C0U N07     # 32
00925  7        MA   C4           B813  &013                            2557  # C0U N21     # 32
00930  7        C    0089         CAGE                                  2564  C 089 G4V     # 32
00935  5        B    B810                     /                        2571  B M02 /       # 32
00940  4        B    SUB3X                        ZERO INDEX REGS      2576  B M9Z         # 32
00945  1        W                                 LINE OF TABLE 10     2580  2             # 32
00950  4        CS   0299                                              2581  / 299         # 33
00955  5        B    SUB3B                    @   NEW HEADING          2585  B E35 @       # 33
00960  4        B    B800                         TO READ TAPE CD      2590  B J08         # 33
00965  4 B820   B    SUB8W                        PRNT TABL 11T014     2594  B I56         # 33
00970  4        B    B830                                              2598  B 002         # 33
00975  7 B830   MCW  B            B800  &017                           2602  M R6T J25     # 33
```

```
00980  7        MCW B            B800  &025                          2609  M R6T J33     # 33
00985  7        MCW NOP          B820  -014                          2616  M G1X N80     # 34
00990  7        SBR B820  &007   B840                                2623  H 001 049     # 34
00995  4        B   SUB8Y                                            2630  B 41Y         # 34
01000  4        B   SUB9                                             2634  B 47‡         # 34
01005  7        SBR SUB8W &018   TABL12                              2638  H I74 H1Z     # 34
01010  4        B   B800                         GO FOR TABLE 12     2645  B J08         # 34
01015  7 B840   MCW ONE          B800  &024                          2649  M B7Y J32     # 34
01020  7        SBR B820  &007   B850                                2656  H 001 082     # 35
01025  4        B   SUB8Y                                            2663  B 41Y         # 35
01030  4        B   SUB9                                             2667  B 47‡         # 35
01035  7        SBR SUB8W &018   TABL13                              2671  H I74 H2Y     # 35
01040  4        B   B800                         GO FOR TABLE 13     2678  B J08         # 35
01045  7 B850   MCW BLANKY-010    B800  &024                          2682  M D1V J32     # 35
01050  7        SBR B820  &007   B860                                2689  H 001 P15     # 35
01055  4        B   SUB8Y                                            2696  B 41Y         # 36
01060  4        B   SUB9                                             2700  B 47‡         # 36
01065  7        SBR SUB8W &018   TABL14                              2704  H I74 H3X     # 36
01070  4        B   B800                         GO FOR TABLE 14     2711  B J08         # 36
01075  2 B860   CC                           3                       2715  F 3           # 36
01080  7        MCW TSENSE       0259                                2717  M H5V 259     # 36
01085  7        MCW SENSES       0267                                2724  M H6X 267     # 36
01090  1        W                                                    2731  ?             # 36
01100  7        H   0999         0999                                2732  . 999 999     # 37
01105
01110
01115             CERTAIN SUBROUTINES FOR FINAL PHASE OF PROGRAM
01120
01125  4 SUB2T  SBR EXIT2T&003                  SUBROUTINE TO       2739  H Q23         # 37
01130  7        SBR SUB8T &010   C51             SHORTEN LENGTH      2743  H B71 F5X     # 37
01135  7        SBR SUB8T &022   C100            INTERVAL TO 50      2750  H B83 F6‡     # 37
01140  7        SBR SUB8T3&006   C150                                2757  H C13 F6T     # 37
```

```
01145  7         SBR SUB8T4&006  C200                                2764  H C43 D6Y     # 37
01150  7         SBR SUB8T5&006  C250                                2771  H C73 F6W     # 38
01155  7         SBR SUB8T6&006  C300                                2778  H D03 D7/     # 38
01160  7         SBR SUB8T7&006  C350                                2785  H D33 F6Z     # 38
01165  7         SBR SUB8T8&C06  C400                                2792  H D63 D7U     # 38
01170  7         SBR SUB8T9&006  C450                                2799  H D93 F7S     # 38
01175  7         SBR SUB8C &003  LENGA                               2806  H &77 E2/     # 39
01180  7         MCW B           SENSES-005                          2813  M R6T H6S     # 39
01185  4 EXIT2T  B   0000                        END SUB TWO T       2820  B 000         # 39
01190
01195
01200  4 SUB2U   SBR EXIT2U&003                 SUBROUTINE TO       2824  H R08         # 39
01205  7         SBR SUB8T &010  C26             SHORTEN LENGTH      2828  H B71 F7V     # 39
01210  7         SBR SUB8T &022  C50             INTERVAL TO 25      2835  H B83 F7Y     # 39
01215  7         SBR SUB8T3&006  C75                                 2842  H C13 F8/     # 40
01220  7         SBR SUB8T4&006  C100                                2849  H C43 F6‡     # 40
01225  7         SBR SUB8T5&006  C125                                2856  H C73 F8U     # 40
01230  7         SBR SUB8T6&006  C150                                2863  H D03 F6T     # 40
01235  7         SBR SUB8T7&006  C175                                2870  H D33 F8X     # 40
01240  7         SBR SUB8T8&006  C200                                2877  H D63 D6Y     # 41
01245  7         SBR SUB8T9&006  C225                                2884  H D93 F9‡     # 41
01250  7         SBR SUB8C &003  LENGK                               2891  H &77 E9/     # 41
01255  7         MCW C           SENSES-004                          2898  M H5W H6T     # 41
01260  4 EXIT2U  B   0000                        END SUB TWO U       2905  B 000         # 41
01265
01270
01275  4 SUB8    SBR EXIT8 &003                 SUBROUTINE TO       2909  H B60         # 41
01280  2         CC                          2  PRINT OUT TABLES    2913  F 2           # 41
01285  4         CS  0299                       8 AND 9              2915  / 299         # 42
01290  7         MCW TABLE8      0256                                2919  M D9X 256     # 42
01295  1         W                                                   2926  2             # 42
01300  4         CS  0299                                            2927  / 299         # 42
01305  2         CC                          L                       2931  F L           # 42
```

```
01310  7         MCW TOTAL        0231
01315  7         MCW MALE         0252
01320  7         MCW FEMALE       0272
01325  7         MCW UNSEX        0291
01330  1         W
01335  4         CS  0299
01340  2         CC                          J
01345  7         MCW TOTAL        0214
01350  7 SUB8A   MCW MEAN         0227      1
01355  7         MCW NOFISH-005   0236      1
01360  7         A   C20          0089
01365  7         C   0089         C80
01370  5         B   SUB8A                   /
01375  7         SBR 0089         0000
01380  1         W
01385  4         CS  0299
01390  7         MCW LENGTH       0215
01395  7 SUB8B   MCW KTL          0226      1
01400  7         MCW FISH         0235      1
01405  7         A   C20          0089
01410  7         C   0089         C80
01415  5         B   SUB8B                   /
01420  7         SBR 0089         0000
01425  1         W
01430  4         CS  0299
01435  2         CC                          K
01440  7 SUB8C   MCW LENG1        0216
01445  7 SUB8D   C   NO100T     2 BLANKY-007
01450  5         B   SUB8E                   S
01455  7         ZA  ZEROX        DIVIS3-029
01460  7         MCW TL100T     1 DIVIS3-030
01465  7         D   NO100T     2 DIVIS3-037
```

PAGE# 9

```
2933  M 01Z 231     # 42
2940  M R5/ 252     # 42
2947  M POT 272     # 42
2954  M R6/ 291     # 43
2961  2             # 43
2962  / 299         # 43
2966  F J           # 43
2968  M 01Z 214     # 43
2975  M E0/ 2S7     # 43
2982  M P5/ 2T6     # 43
2989  A C5Z 089     # 44
2996  C 089 C6S     # 44
3003  B R75 /       # 44
3008  H 089 000     # 44
3015  2             # 44
3016  / 299         # 44
3020  M 06‡ 215     # 44
3027  M 04/ 2S6     # 45
3034  M E0V 2T5     # 45
3041  A C5Z 089     # 45
3048  C 089 C6S     # 45
3055  B &27 /       # 45
3060  H 089 000     # 45
3067  2             # 45
3068  / 299         # 46
3072  F K           # 46
3074  M 136 216     # 46
3081  C 6N8 D1Y     # 46
3088  B A50 S       # 46
3093  & &6T A9W     # 46
3100  M 3U2 A9V     # 46
3107  % 6N8 A8Y     # 47
```

```
01470  7         A    C5           DIVIS3-034                          3114  A COX A9/      # 47
01475  4         SW   DIVIS3-037                                       3121  , A8Y          # 47
01480  7         LCA  EDTWD1       0227       3                        3125  L R8V 2B7      # 47
01485  7         MCE  DIVIS3-035   0227       3                        3132  E A9‡ 2B7      # 47
01490  7         MCS  NO100T    2  0235       3                        3139  Z 6N8 2C5      # 47
01495  4         CW   DIVIS3-037                                       3146  ¤ A8Y          # 48
01500  7 SUB8E    A    C40          0094                                3150  A 117 094      # 48
01505  7         A    C80          0089                                3157  A C6S 089      # 48
01510  7         A    C20          0099                                3164  A C5Z 099      # 48
01515  7         C    0094         C160A                               3171  C 094 E0Y      # 48
01520  5         B    SUB8D                    /                       3178  B &81 /        # 48
01525  1         W                                                     3183  2              # 48
01530  4         CS   0299                                             3184  / 299          # 49
01535  7 SUB8F    S    C156         0094                                3188  S E1/ 094      # 49
01540  7         S    C312         0089                                3195  S E1U 089      # 49
01545  7         MZ   ZONES        0089                                3202  Y C3T 089      # 49
01550  7         MZ   ZONES        0094                                3209  Y C3T 094      # 49
01555  7         SBR  0099         0000                                3216  H 099 000      # 49
01560  7         C    0094         C40                                 3223  C 094 117      # 50
01565  5         B    SUB8G                    S                       3230  B B53 S        # 50
01570  7         MA   C7           SUB8C &003                          3235  # C1T &77      # 50
01575  7         A    C4           C160A                               3242  A C0U E0Y      # 50
01580  4         B    SUB8C                                            3249  B &74          # 50
01585  4 SUB8G    B    SUB3X                                            3253  B M9Z          # 50
01590  4 EXIT8    B    0000                          END SUB EIGHT      3257  B 000          # 50
01595
01600
01605  4 SUB8T    SBR  EXIT8T&003                    SUBROUTINE TO      3261  H E34          # 51
01610  7         C    0014         C101                DETERMINE LENGTH  3265  C 014 D6V      # 51
01615  5         B    EXIT8T                   U     INTERVAL           3272  B E31 U        # 51
01620  7         C    0014         C200                                3277  C 014 D6Y      # 51
01625  5         B    SUB8T3                   T                       3284  B C07 T        # 51
```

```
01630  7         A   C8          0089                          3289  A C1W 089     # 51
01635  7         A   C4          0094                          3296  A C0U 094     # 52
01640  4         B   EXIT8T                     101 TO 200    3303  B E31         # 52
01645  7 SUB8T3  C   0014        C300                          3307  C 014 D7/     # 52
01650  5         B   SUB8T4                 T                 3314  B C37 T       # 52
01655  7         A   C16         0089                          3319  A 105 089     # 52
01660  7         A   C8          0094                          3326  A C1W 094     # 52
01665  4         B   EXIT8T                     201 TO 300    3333  B E31         # 52
01670  7 SUB8T4  C   0014        C400                          3337  C 014 D7U     # 53
01675  5         B   SUB8T5                 T                 3344  B C67 T       # 53
01680  7         A   C24         0089                          3349  A 108 089     # 53
01685  7         A   C12         0094                          3356  A C2Y 094     # 53
01690  4         B   EXIT8T                     301 TO 400    3363  B E31         # 53
01695  7 SUB8T5  C   0014        C500                          3367  C 014 D7X     # 53
01700  5         B   SUB8T6                 T                 3374  B C97 T       # 54
01705  7         A   C32         0089                          3379  A D2Y 089     # 54
01710  7         A   C16         0094                          3386  A 105 094     # 54
01715  4         B   EXIT8T                     401 TO 500    3393  B E31         # 54
01720  7 SUB8T6  C   0014        C600                          3397  C 014 D8‡     # 54
01725  5         B   SUB8T7                 T                 3404  B D27 T       # 54
01730  7         A   C40         0089                          3409  A 117 089     # 55
01735  7         A   C20         0094                          3416  A C5Z 094     # 55
01740  4         B   EXIT8T                     501 TO 600    3423  B E31         # 55
01745  7 SUB8T7  C   0014        C700                          3427  C 014 D8T     # 55
01750  5         B   SUB8T8                 T                 3434  B D57 T       # 55
01755  7         A   C48         0089                          3439  A 120 089     # 55
01760  7         A   C24         0094                          3446  A 108 094     # 56
01765  4         B   EXIT8T                     601 TO 700    3453  B E31         # 56
01770  7 SUB8T8  C   0014        C800                          3457  C 014 D8W     # 56
01775  5         B   SUB8T9                 T                 3464  B D87 T       # 56
01780  7         A   C56         0089                          3469  A 123 089     # 56
01785  7         A   C28         0094                          3476  A 111 094     # 56
01790  4         B   EXIT8T                     701 TO 800    3483  B E31         # 56
```

```
01795  7 SUB8T9 C    0014          C900                                3487  C 014 D8Z      # 57
01800  5         B    SUB8TO                     T                    3494  B E17 T        # 57
01805  7         A    C64           0089                              3499  A 126 089      # 57
01810  7         A    C32           0094                              3506  A D2Y 094      # 57
01815  4         B    EXIT8T                         801 TO 900       3513  B E31          # 57
01820  7 SUB8TO  A    C72           0089                              3517  A 129 089      # 57
01825  7         A    C36           0094                              3524  A 114 094      # 58
01830  4 EXIT8T  B    0000                           END SUB EIGHT T  3531  B 000          # 58
01835
01840
01845  4 SUB3B   SBR  EXIT3B&003                    SUBROUTINE FOR   3535  H F87          # 58
01850  2         CC                         1       CARRIAGE CONTROL 3539  F 1            # 58
01855  4         CS   0299                          TABLE 10         3541  / 299          # 58
01860  7         MCW  TABL10        0257                             3545  M G2X 257      # 58
01865  1         W                                                   3552  2              # 58
01870  4         CS   0299                                           3553  / 299          # 58
01875  2         CC                         K                        3557  F K            # 59
01880  7         MCW  SPEC          0213                             3559  M 00Y 213      # 59
01885  7         MCW  SEX           0220                             3566  M 01/ 220      # 59
01890  7         MCW  TAGE          0227                             3573  M 01U 227      # 59
01895  7         MCW  TOTAL         0234                             3580  M 01Z 234      # 59
01900  4         SW   MCALEN-020                                     3587  , G8U          # 59
01905  7         MCW  MCALEN        0275                             3591  M H0U 275      # 59
01910  4         CW   MCALEN-020                                     3598  ¤ G8U          # 60
01915  7         MCW  SCL           0297                             3602  M G3‡ 297      # 60
01920  1         W                                                   3609  2              # 60
01925  4         CS   0299                                           3610  / 299          # 60
01930  7         MCW  NO            0212                             3614  M 05U 212      # 60
01935  7         MCW  LENGTH        0234                             3621  M 06‡ 234      # 60
01940  7         MCW  MAG           0297                             3628  M G3T 297      # 60
01945  1         W                                                   3635  2              # 60
01950  4         CS   0299                                           3636  / 299          # 61
```

```
01955  7 SUB3BA MCS C1          1 0237       2                        3640  Z BZV 2L7      # 61
01960  7        A   C3            0089                                3647  A C0/ 089      # 61
01965  7        A   C5            0094                                3654  A C0X 094      # 61
01970  7        C   0089          C36                                 3661  C 089 114      # 61
01975  5        B   SUB3BA                    /                       3668  B F40 /        # 61
01980  1        W                                                     3673  2              # 61
01985  4        CS  0299                                              3674  / 299         # 62
01990  4        B   SUB3X                                             3678  B M9Z         # 62
01995  2        CC                            K                       3682  F K           # 62
02000  4 EXIT3B B   0000                        END SUB THREE B       3684  B 000         # 62
02005
02010
02015  4 SUB8U  SBR EXIT8U&003                 SUBROUTINE TO         3688  H G72         # 62
02020  7        MCW 0009          AGE         SET INDEX REGS        3692  M 009 P8Z     # 62
02025  7        S   ONE           AGE         FOR VARIOUS AGES      3699  S B7Y P8Z     # 62
02030  7        MZ  ZONES         AGE                               3706  Y C3T P8Z     # 62
02035  7        ZA  AGE           MAREA2-029                        3713  & P8Z &8Y     # 63
02040  7        M   C8            MAREA2-025                        3720  @ C1W &9S     # 63
02045  7        MZ  ZONES         MAREA2-025                        3727  Y C3T &9S     # 63
02050  7        MCW MAREA2-025    0089                              3734  M &9S 089     # 63
02055  7        ZA  AGE           MAREA2-029                        3741  & P8Z &8Y     # 63
02060  7        M   C4            MAREA2-025                        3748  @ C0U &9S     # 64
02065  7        MZ  ZONES         MAREA2-025                        3755  Y C3T &9S     # 64
02070  7        MCW MAREA2-025    0094                              3762  M &9S 094     # 64
02075  4 EXIT8U B   0000                        END SUB EIGHT U       3769  B 000         # 64
02080
02085
02090  4 SUB8V  SBR EXIT8V&003                 SUBROUTINE TO         3773  H I55         # 64
02095  7        ZA  0009          MAREA2-029  ADJUST FOR AGE        3777  & 009 &8Y     # 64
02100  7        S   ONE           MAREA2-029  IN TABLES 11 12       3784  S B7Y &8Y     # 65
02105  7        M   C2            MAREA2-025  13 AND 14             3791  @ B9Y &9S     # 65
02110  7        MZ  ZONES         MAREA2-025                        3798  Y C3T &9S     # 65
```

```
02115  7          A    MAREA2-025  0099                                3805  A &9S 099      # 65
02120  7          ZA   C8          MAREA2-028                          3812  & C1W &8Z      # 65
02125  7          M    KONS1     3 MAREA2-025                          3819  @ GDX &9S      # 66
02130  7          MZ   ZONES       MAREA2-025                          3826  Y C3T &9S      # 66
02135  7          MA   MAREA2-025  B811  &006                          3833  # &9S N00      # 66
02140  7          MCW  MAREA2-025  TEMPO6-003                          3840  M &9S &5Z      # 66
02145  7          ZA   TEMPO6-003  MAREA2-026                          3847  & &5Z &9/      # 66
02150  7          D    TWO         MAREA2-028                          3854  % B7Z &8Z      # 67
02155  7          MZ   ZONES       MAREA2-028                          3861  Y C3T &8Z      # 67
02160  7          MA   MAREA2-028  B811  &013                          3868  # &8Z N07      # 67
02165  7          ZA   0009        MAREA2-029                          3875  & 009 &8Y      # 67
02170  7          S    ONE         MAREA2-029                          3882  S B7Y &8Y      # 67
02175  7          M    C8          MAREA2-025                          3889  @ C1W &9S      # 68
02180  7          MZ   ZONES       MAREA2-025                          3896  Y C3T &9S      # 68
02185  7          MA   MAREA2-025  B812  &006                          3903  # &9S L94      # 68
02190  7          MCW  MAREA2-025  TEMPO6-003                          3910  M &9S &5Z      # 68
02195  7          ZA   TEMPO6-003  MAREA2-026                          3917  & &5Z &9/      # 68
02200  7          D    TWO         MAREA2-028                          3924  % B7Z &8Z      # 69
02205  7          MZ   ZONES       MAREA2-028                          3931  Y C3T &8Z      # 69
02210  7          MA   MAREA2-028  B812  &013                          3938  # &8Z M01      # 69
02215  7          SBR  0099        0000                                3945  H 099 000      # 69
02220  4 EXIT8V B    0000                          END SUB EIGHT V     3952  B 000          # 69
02225
02230
02235  4 SUB8W    SBR  EXIT8W&003                  SUBROUTINE TO       3956  H 41X          # 69
02240  2          CC                            2  PRINT OUT TABLES    3960  F 2            # 69
02245  4          CS   0299                        11 12 13 AND 14     3962  / 299          # 70
02250  5          CU   %U1                      R                      3966  U %U1 R        # 70
02255  7          MCW  TABL11      0256                                3971  M G7Y 256      # 70
02260  1          W                                                    3978  2              # 70
02265  4          CS   0299                                            3979  / 299          # 70
02270  2          CC                            L                      3983  F L            # 70
```

```
02275  7         MCW TAGE         0212                          3985  M 01U 212     # 70
02280  7         MCW NOFISH-005   0219                          3992  M P5/ 219     # 70
02285  7         MCW MCALEN-022   0225                          3999  M G8S 225     # 71
02290  7         MCW MCALEN       0274                          4006  M H0U 274     # 71
02295  1         W                                              4013  2             # 71
02300  4         CS  0299                                       4014  / 299         # 71
02305  7         MCW FISH         0218                          4018  M E0V 218     # 71
02310  7         MCW T.L          0224                          4025  M 06T 224     # 71
02315  1         W                                              4032  2             # 71
02320  4         CS  0299                                       4033  / 299         # 71
02325  7 SUB8WA MCS C1         1 0230      2                    4037  Z BZV 2L0     # 72
02330  7         A   C3           0089                          4044  A C0/ 089     # 72
02335  7         A   C6           0094                          4051  A C1‡ 094     # 72
02340  7         C   0089         C36                           4058  C 089 114     # 72
02345  5         B   SUB8WA                   /                 4065  B 03X /       # 72
02350  1         W                                              4070  2             # 72
02355  4         CS  0299                                       4071  / 299         # 72
02360  4         B   SUB3X                                      4075  B M9Z         # 73
02365  2         CC                           K                 4079  F K           # 73
02370  7 SUB8WB MCS C1           0212                          4081  Z B9V 212     # 73
02375  7         MCS NLAGE1       0218                          4088  Z U66 218     # 73
02380  7         ZA  ZEROX        DIVIS3-031                    4095  & &6T A9U     # 73
02385  7         MCW TLAGE1       DIVIS3-032                    4102  M 966 A9T     # 73
02390  7         C   NLAGE1       BLANKY-007                    4109  C U66 D1Y     # 73
02395  5         B   SUB8WE                   S                 4116  B 15‡ S       # 74
02400  7         D   NLAGE1       DIVIS3-039                    4121  % U66 A8W     # 74
02405  7         A   C5           DIVIS3-036                    4128  A C0X A8Z     # 74
02410  4         SW  DIVIS3-040                                 4135  , A8V         # 74
02415  7         MCS DIVIS3-037   0224                          4139  Z A8Y 224     # 74
02420  4         CW  DIVIS3-040                                 4146  ¤ A8V         # 74
02425  7 SUB8WE ZA  ZEROX        DIVIS3-031                    4150  & &6T A9U     # 74
02430  7         MCW TAGE1      1 DIVIS3-032                    4157  M 3U2 A9T     # 75
```

```
02435  7         C    NTAGE1     2 BLANKY-007
02440  5         B    SUB8WD                    S
02445  7         D    NTAGE1     2 DIVIS3-039
02450  7         A    C5           DIVIS3-036
02455  4         SW   DIVIS3-040
02460  7         MCS  DIVIS3-037   0230       3
02465  4         CW   DIVIS3-040
02470  7 SUB8WD  A    C8           0089
02475  7         A    C4           0094
02480  7         A    C6           0099
02485  7         C    0099         C6A
02490  5         B    SUB8WE                    /
02495  1         W
02500  4         CS   0299
02505  7         SBR  0099         0000
02510  7         MA   C3           SUB8WB&003
02515  7         MA   C4           SUB8WB&010
02520  7         MA   C8           SUB8WB&024
02525  7         MA   C4           SUB8WB&031
02530  7         MA   C4           SUB8WB&043
02535  7         A    C6           C6A
02540  7         C    C6A          C78
02545  5         B    SUB8WB                    /
02550  2         CC                             J
02555  4         B    SUB3X
02560  7 SUB8WC  ZA   ZEROX        DIVIS3-031
02565  7         MCW  CLAGE1     1 DIVIS3-032
02570  7         C    NCAGE1     2 BLANKY-007
02575  5         B    SUB8WF                    S
02580  7         D    NCAGE1     2 DIVIS3-039
02585  7         A    C5           DIVIS3-036
02590  4         SW   DIVIS3-040
```

PAGE# 16

```
4164  C /N4 D1Y     # 75
4171  B 20V S       # 75
4176  % /N4 A8W     # 75
4183  A C0X A8Z     # 75
4190  , A8V         # 75
4194  Z A8Y 2C0     # 76
4201  ¤ A8V         # 76
4205  A C1W 089     # 76
4212  A C0U 094     # 76
4219  A C1‡ 099     # 76
4226  C 099 H0X     # 76
4233  B 15‡ /       # 77
4238  2             # 77
4239  / 299         # 77
4243  H 099 000     # 77
4250  # C0/ 08U     # 77
4257  # C0U 09/     # 77
4264  # C1W 10V     # 77
4271  # C0U 11S     # 78
4278  # C0U 12U     # 78
4285  A C1‡ H0X     # 78
4292  C H0X H1‡     # 78
4299  B 08/ /       # 78
4304  F J           # 78
4306  B M9Z         # 78
4310  & &6T A9U     # 79
4317  M ‡W2 A9T     # 79
4324  C VJ4 D1Y     # 79
4331  B 36V S       # 79
4336  % VJ4 A8W     # 79
4343  A C0X A8Z     # 79
4350  , A8V         # 80
```

```
02595  7         MCS DIVIS3-037  0230      3                          4354  Z A8Y 2C0     # 80
02597  4         CW  DIVIS3-040                                       4361  ¤ A8V         # 80
02605  7 SUB8WF  A   C8          0089                                 4365  A C1W 089     # 80
02610  7         A   C4          0094                                 4372  A COU 094     # 80
02615  7         A   C6          0099                                 4379  A C1‡ 099     # 80
02620  7         C   0094        C48                                  4386  C 094 120     # 81
02625  5         B   SUB8WC                  /                        4393  B 31‡ /       # 81
02630  7         MCW MCALEN-022  0213                                 4398  M G8S 213     # 81
02635  1         W                                                    4405  2             # 81
02640  4         CS  0299                                             4406  / 299         # 81
02645  4         B   SUB3X                                            4410  B M9Z         # 81
02650  4 EXIT8W  B   0000                        END SUB EIGHT W      4414  B 000         # 81
02655
02660
02665  4 SUB8Y   SBR EXIT8Y&003                 SUBROUTINE TO        4418  H 46Z         # 81
02670  7         MCW BLANKY      0342      1     BLANK TABULATION     4422  M D2V 3U2     # 82
02675  7         MCW BLANKY      1154      2     AREA PRIOR TO        4429  M D2V /N4     # 82
02680  7         A   C8          0089            TABLES 12 13 14      4436  A C1W 089     # 82
02685  7         A   C4          0094                                 4443  A COU 094     # 82
02690  7         C   0094        C408                                 4450  C 094 G0Y     # 82
02695  5         B   SUB8Y &004               /                        4457  B 42S /       # 82
02700  4         B   SUB3X                                            4462  B M9Z         # 83
02705  4 EXIT8Y  B   0000                        END SUB EIGHT Y      4466  B 000         # 83
02710
02715
02720  4 SUB9    SBR EXIT9 &003                AUXILLARY            4470  H 51T         # 83
02725  7         SBR SUB8WB&003  C1            SUBROUTINE FOR       4474  H 08U B9V     # 83
02730  7         SBR SUB8WB&010  NLAGE1        TABLES 12 13 14      4481  H 09/ U66     # 83
02735  4         SBR SUB8WB&031                                     4488  H 11S         # 83
02740  4         SBR SUB8WB&043                                     4492  H 12U         # 83
02745  7         SBR SUB8WB&024  TLAGE1                             4496  H 10V 966     # 83
02750  7         MCW C6          C6A                                4503  M C1‡ H0X     # 84
02755  4 EXIT9    B   0000                        END SUB NINE       4510  B 000         # 84
```

```
02760  1         DCW *                                          4514    DCW          # 84
02765
02770
02775  1         DCW *                                          4515    DCW          # 84
02780  4 EXOLAY  R   0042                                       4516  1 042          # 84
02785  1         DCW *                                          4520    DCW          # 84
02790            EX  OLAY                                             B V59          # 85
02795            ORG 1515                                               ORG V15
02800
02805             THIS ENDS THE PHASE OF THE PROGRAM WHICH IS
02810             PLACED ON TAPE 2 AND RECALLED LATER
02815
02820
02825             THE FOLLOWING PHASE IS EXECUTED AND OVERWRITTEN
02830
02835  4 INIT    B   INITA                                      1515  B V25          # 86
02840  3 C198    DCW *          198                             1521    DCW          # 86
02845  3 C11     DCW *          011                             1524    DCW          # 86
02850
02855  4 INITA   SW  0401      1                SET WORD MARKS  1525  , 4‡1          # 86
02860  7         A   C11         0089            IN TABULATION   1529  A V24 089     # 86
02865  7         C   0089        C198            AREA            1536  C 089 V21     # 86
02870  5         B   INITA                   /                   1543  B V25 /       # 86
02875  7         SBR 0089        0000                            1548  H 089 000     # 86
02880  4 INITB   SW  0761      1                                 1555  , 7W1         # 87
02885  7         A   C11         0089                            1559  A V24 089     # 87
02890  7         C   0089        C198                            1566  C 089 V21     # 87
02895  5         B   INITB                   /                   1573  B V55 /       # 87
02900  7         SBR 0089        0000                            1578  H 089 000     # 87
02905  4 INITC   SW  1121      1                                 1585  , /S1         # 87
02910  7         A   C11         0089                            1589  A V24 089     # 87
02915  7         C   0089        C198                            1596  C 089 V21     # 88
02920  5         B   INITC                   /                   1603  B V85 /       # 88
```

```
02925  4        SW   DIVIS3-044                                    1608  , A8/          # 88
02930  7        SW   0087        0092          SET WORD MARKS     1612  , 087 092      # 88
02935  4        SW   0097                      IN INDEX REGS      1619  , 097          # 88
02940  7        SBR  0089        0000                             1623  H 089 000      # 88
02945  4        R    0042                                        1630  1 042          # 88
02950  1        DCW  *                                           1634    DCW          # 88
02955           EX   INIT                                              B V15          # 89
02960           ORG  1515                                                ORG V15
02965
02970            THIS ENDS THE PHASE EXECUTED AND OVERWRITTEN
02975
02980
02985            THIS IS THE STARTING POINT OF THE PROGRAM
02990
02995  5 START  B    SUB2V                   D   WHICH LENGTH      1515  B Y1/ D        # 90
03000  5        B    SUB2W                   E   WHICH LENGTH      1520  B -4Y E        # 90
03005  5        B    SUB2X                   F   TOTAL VS FORK     1525  B B55 F        # 90
03010  5        B    SUB2Y                   G   STAND VS FORK     1530  B C07 G        # 90
03015  7        SW   0001        0004          START SET WORD     1535  , 001 004      # 90
03020  7        SW   0008        0010          MARKS IN READ      1542  , 008 010      # 90
03025  7        SW   0011        0012          AREA               1549  , 011 012      # 90
03030  7        SW   0015        0018                             1556  , 015 018      # 91
03035  7        SW   0021        0025                             1563  , 021 025      # 91
03040  7        SW   0028        0031                             1570  , 028 031      # 91
03045  7        SW   0034        0037                             1577  , 034 037      # 91
03050  7        SW   0040        0043                             1584  , 040 043      # 91
03055  7        SW   0046        0049                             1591  , 046 049      # 92
03060  7        SW   0052        0055                             1598  , 052 055      # 92
03065  7        SW   0058        0061                             1605  , 058 061      # 92
03070  7        SW   0064        0066          END SET WORD       1612  , 064 066      # 92
03075  7        SW   0069        0072          MARKS IN READ      1619  , 069 072      # 92
03080  7        SW   0075        0078          AREA               1626  , 075 078      # 93
```

```
03085  4        B    SUB3                          HEADING TABLE 4   1633  B C89          # 93
03090  1 B098   R                                  MASTER            1637  1              # 93
03095  2        SS                            1                     1638  K 1            # 93
03100  8        B    B101        0080         -                     1640  B X23 080 -    # 93
03105  4        B    B099  &001                                     1648  B W53          # 93
03110  1 B099   R                                  UNITS             1652  1              # 93
03115  2        SS                            1                     1653  K 1            # 93
03120  8        B    B104        0011         1                     1655  B X79 011 1    # 94
03125  4        B    B100  &001                                     1663  B W68          # 94
03130  1 B100   R                                  READ A CARD       1667  1              # 94
03135  2        SS                            1                     1668  K 1            # 94
03140  4        B    TAPEW                         CARD TO TAPE 1    1670  B M0‡          # 94
03145  7        A    C66         0089                               1674  A C4U 089      # 94
03150  8        B    B105        0010         0   MALE              1681  B X97 010 0    # 94
03155  7        A    C66         0089                               1689  A C4U 089      # 94
03160  8        B    B105        0010         1   FEMALE            1696  B X97 010 1    # 95
03165  7        A    C66         0089                               1704  A C4U 089      # 95
03170  8        B    B105        0010             UNSEXED           1711  B X97 010      # 95
03175  4        B    ERROR1                       KP ERROR IN 10    1719  B H6Z          # 95
03180  8 B101   B    B102        0001         1                     1723  B X43 001 1    # 95
03185  8        B    B103        0002         1                     1731  B X68 002 1    # 96
03190  4        B    B099                         TO READ A CARD    1739  B W52          # 96
03195  7 B102   MCW  NOP         B130  -004                         1743  M G1X -24      # 96
03200  7        MCW  NOP         B410  -004                         1750  M G1X L84      # 96
03205  7        MCW  NOP         B525                               1757  M G1X Q10      # 96
03210  4        B    B101  &008                                     1764  B X31          # 96
03215  7 B103   MCW  A           SWITCH                             1768  M R6S H3Y      # 97
03220  4        B    B099                         TO READ A CARD    1775  B W52          # 97
03225  7 B104   SBR  EXIT4 -008  DIVIS3-036                         1779  H L5Z A8Z      # 97
03230  7        SBR  EXIT4 -012  DIVIS3-035                         1786  H L5V A9‡      # 97
03235  4        B    B100  &001                                     1793  B W68          # 97
03240  7 B105   MCS  0007        0213             SET UP FOR LINE   1797  Z 007 213      # 97
03245  8        B    B110        0010         0   OF LIST PRINT     1804  B Y32 010 0    # 98
```

```
03250  8        B    B112        0010        1                      1812  B Y43 010 1   # 98
03255  8        B    B114        0010                               1820  B Y54 010     # 98
03260  4        B    ERROR1                      KP ERROR IN 10     1828  B H6Z         # 98
03265  7 B110   MCW  MALE        0221                               1832  M R5/ 221     # 98
03270  4        B    B120                                           1839  B Y61         # 98
03275  7 B112   MCW  FEM         0221                               1843  M R5W 221     # 99
03280  4        B    B120                                           1850  B Y61         # 99
03285  7 B114   MCW  UNSEX       0221                               1854  M R6/ 221     # 99
03290  7 B120   MCS  0009        0226                               1861  Z 009 226     # 99
03295  7        MCS  0014        0233                               1868  Z 014 233     # 99
03300  7        MCS  0017        0240                               1875  Z 017 240     # 99
03305  7        MCS  0020        0247                               1882  Z 020 247     #100
03310  7        MCS  0024        0254                               1889  Z 024 254     #100
03315  7        MCW  0014        NUMBER                             1896  M 014 B5X     #100
03320  7        MN   ZEROS1      NUMBER-003                         1903  D &4W B5U     #100
03325  4        B    SUB5                        CALC LOG LENGTH    1910  B 27S         #100
03330  7        LCA  EDTWD1      0261                               1914  L R8V 261     #100
03335  7        MCE  LOGISM-003  0261                               1921  E D0/ 261     #101
03340  7        MCW  LOGISM-003  RGLOGL                             1928  M D0/ B5‡     #101
03345  7        MCW  0024        NUMBER                             1935  M 024 B5X     #101
03350  4        B    SUB5                        CALC LOG WEIGHT    1942  B 27S         #101
03355  7        LCA  EDTWD1      0268                               1946  L R8V 268     #101
03360  7        MCE  LOGISM-003  0268                               1953  E D0/ 268     #101
03365  7        MCW  LOGISM-003  RGLOGW                             1960  M D0/ B5T     #102
03370  7        ZA   ZEROX       DIVIS3-036                         1967  & &6T A8Z     #102
03375  7        MCW  0027        DIVIS3-039                         1974  M 027 A8W     #102
03380  7        D    0065        DIVIS3-041                         1981  % 065 A8U     #102
03385  7        A    C5          DIVIS3-039                         1988  A C0X A8W     #102
03390  7        MCW  DIVIS3-040  SCALER                             1995  M A8V &6X     #103
03395  7        LCA  EDTWD2      0297                               2002  L R9‡ 297     #103
03400  7        MCE  SCALER      0297                               2009  E &6X 297     #103
03405  4        B    SUB6                        TALLY TABLE 5      2016  B 65/         #103
```

```
03410  4        B    SUB6A                          TALLY TABLE 6     2020  B 78V          #103
03415  4        B    SUB6B                          TALLY TABLE 7     2024  B 91Z          #103
03420  7 B130   C    0014       BLANKY-008                            2028  C 014 D1X      #103
03425  5        B    B140                     S                       2035  B -72 S        #104
03430  7        MCW  0014       KLENG                                 2040  M 014 &4Z      #104
03435  7        MCW  0024       KWEIGT                                2047  M 024 &5T      #104
03440  4        B    SUB4                           CALCULATE KTL     2054  B K8V          #104
03445  7        LCA  EDTWD1     0275                                  2058  L R8V 275      #104
03450  7        MCE  CONDIT     0275                                  2065  E &5W 275      #104
03455  7 B140   C    0017       BLANKY-008                            2072  C 017 D1X      #105
03460  5        B    B150                     S                       2079  B J16 S        #105
03465  7        MCW  0017       KLENG                                 2084  M 017 &4Z      #105
03470  7        MCW  0024       KWEIGT                                2091  M 024 &5T      #105
03475  4        B    SUB4                           CALCULATE KSL     2098  B K8V          #105
03480  7        LCA  EDTWD1     0282                                  2102  L R8V 282      #105
03485  7        MCE  CONDIT     0282                                  2109  E &5W 282      #106
03490  7 B150   C    0020       BLANKY-008                            2116  C 020 D1X      #106
03495  5        B    B160                     S                       2123  B J60 S        #106
03500  7        MCW  0020       KLENG                                 2128  M 020 &4Z      #106
03505  7        MCW  0024       KWEIGT                                2135  M 024 &5T      #106
03510  4        B    SUB4                           CALCULATE KFL     2142  B K8V          #106
03515  7        LCA  EDTWD1     0289                                  2146  L R8V 289      #107
03520  7        MCE  CONDIT     0289                                  2153  E &5W 289      #107
03525  1 B160   W                                   LINE OF TABLE 4   2160  2              #107
03530  4        CS   0299                                             2161  / 299          #107
03535  4        B    SUB3X                          ZERO INDEX REGS   2165  B M9Z          #107
03540  5        B    SUB3                     @     HEADING TABLE 4   2169  B C89 @        #107
03545  5        B    B200                     A     LAST CARD         2174  B J83 A        #107
03550  4        B    B100                           TO READ A CARD    2179  B W67          #107
03555  5 B200   CU   %U1                      M                       2183  U %U1 M        #108
03560  5        CU   %U1                      R                       2188  U %U1 R        #108
03565  4        B    SUB7                           CALC TABLE 5      2193  B ≠5T          #108
```

```
03570  7 B210   A   C66          0089                                2197  A C4U 089     #108
03575  7        A   C8           0094                                2204  A C1W 094     #108
03580  7        C   0094         C32                                 2211  C 094 D2Y     #108
03585  5        B   B300                     S                       2218  B K43 S       #108
03590  7        C   LSX        1 BLANKY                              2223  C 3U5 D2V     #109
03595  5        B   B210                     S                       2230  B J97 S       #109
03600  4        B   SUB7                                             2235  B ‡5T         #109
03605  4        B   B210                                             2239  B J97         #109
03610  4 B300   B   SUB3X                        ZERO INDEX REGS     2243  B M9Z         #109
03615  7        A   C360         0089                                2247  A C5W 089     #109
03620  7        A   C360         0094                                2254  A C5W 094     #109
03625  7        SBR ALT7A &006   DIVIS3&002                          2261  H /6T B2X     #110
03630  4        SBR ALT7A &020                                       2268  H /7X         #110
03635  7        SBR ALT7A &041   DIVIS3-019                          2272  H /9Y B0W     #110
03640  4        SBR ALT7A &045                                       2279  H S0S         #110
03645  7        SBR ALT7A &048   DIVIS3-020                          2283  H S0V B0V     #110
03650  4        SBR ALT7A &052                                       2290  H S0Z         #110
03655  7        SBR ALT7B &013   TEMPA -005                          2294  H S4‡ A5V     #110
03660  4        B   SUB7                         CALC TABLE 6        2301  B ‡5T         #111
03665  7 B310   A   C66          0089                                2305  A C4U 089     #111
03670  7        A   C8           0094                                2312  A C1W 094     #111
03675  7        C   0094         C392                                2319  C 094 C5‡     #111
03680  5        B   B400                     S                       2326  B L51 S       #111
03685  7        C   LSX        1 BLANKY                              2331  C 3U5 D2V     #111
03690  5        B   B310                     S                       2338  B L05 S       #112
03695  4        B   SUB7                                             2343  B ‡5T         #112
03700  4        B   B310                                             2347  B L05         #112
03705  4 B400   B   SUB3X                        ZERO INDEX REGS     2351  B M9Z         #112
03710  7        A   C720         0089                                2355  A C4X 089     #112
03715  7        A   C720         0094                                2362  A C4X 094     #112
03720  7        SBR ALT7B &034   DIVIS3-011                          2369  H S6/ B1U     #112
03725  4        SBR ALT7B &038                                       2376  H S6V         #113
```

```
03730  4        SBR ALT7B &048                                  2380  H S7V        #113
03735  4        B   SUB7                      CALC TABLE 7      2384  B ‡5T        #113
03740  7 B410   A   C66          0089                          2388  A C4U 089    #113
03745  7        A   C8           0094                          2395  A C1W 094    #113
03750  7        C   0094         C752                          2402  C 094 C5T    #113
03755  5        B   B500                     S                 2409  B M34 S      #113
03760  7        C   LSX        1 BLANKY                        2414  C 3U5 D2V    #114
03765  5        B   B410                     S                 2421  B L88 S      #114
03770  4        B   SUB7                                       2426  B ‡5T        #114
03775  4        B   B410                                       2430  B L88        #114
03780  4 B500   B   SUB3X                     ZERO INDEX REGS   2434  B M9Z        #114
03785  4        B   SUB3A                     PRINT TABLE 5     2438  B E69        #114
03790  7        SBR SUB3A &013   TABLE6                        2442  H E82 08Z    #114
03795  7        SBR SUB3AB&010   LSXA                          2449  H F45 705    #115
03800  7        MZ  ZONE11       SUB3AB&009                    2456  Y C3V F44    #115
03805  7        SBR SUB3AC&010   SSYA                          2463  H G08 716    #115
03810  7        MZ  ZONE11       SUB3AC&009                    2470  Y C3V G07    #115
03815  7        SBR SUB3AD&010   LSX2A                         2477  H G71 727    #115
03820  7        MZ  ZONE11       SUB3AD&009                    2484  Y C3V G70    #116
03825  7        SBR SUB3AE&010   SSY2A                         2491  H H34 738    #116
03830  7        MZ  ZONE11       SUB3AE&009                    2498  Y C3V H33    #116
03835  7        SBR SUB3AF&010   LSSXYA                        2505  H H97 749    #116
03840  7        MZ  ZONE11       SUB3AF&009                    2512  Y C3V H96    #116
03845  7        SBR SUB3AG-004   ALPHA                         2519  H I94 Q7/    #117
03850  7        SBR SUB3AH-004   BETA                          2526  H 05Z Q7V    #117
03855  7        SBR SUB3AJ&003   NLSA                          2533  H I55 760    #117
03860  7        MZ  ZONE11       SUB3AJ&002                    2540  Y C3V I54    #117
03865  7        SBR SUB3AG&010   ALFAA                         2547  H 00Y 966    #117
03870  7        MZ  ZONE11       SUB3AG&009                    2554  Y C3V 00X    #118
03875  7        SBR SUB3AH&010   BETAA                         2561  H 07T 998    #118
03880  7        MZ  ZONE11       SUB3AH&009                    2568  Y C3V 07S    #118
03885  7        SBR SUB3AI&010   RA                            2575  H 15‡ ‡30    #118
```

```
03890  7        MZ   ZONE11       SUB3AI&009                          2582  Y C3V 14Z     #118
03895  7        MCW  SCLRAD       MESAG1                              2589  M Q8W Q1U     #119
03900  7 B510   MCW  TOTLEN       MESAG2                              2596  M Q9X Q3Z     #119
03905  7        MCW  MESAG4       MESAG3                              2603  M R2U Q6W     #119
03910  7        SBR  SUB3AC&003   EDTWD7                              2610  H G01 &4V     #119
03915  7        SBR  SUB3AE&003   EDTWD7                              2617  H H27 &4V     #119
03920  7        SBR  SUB3AF&003   EDTWD3                              2624  H H90 &0S     #120
03925  7        SBR  SUB3AF&020   EDTWDB                              2631  H I07 R6W     #120
03930  4        B    SUB3A                        PRINT TABLE 6      2638  B E69         #120
03935  7 B520   SBR  SUB3A &013   TABLE7                             2642  H E82 09X     #120
03940  7        SBR  SUB3AB&010   LSXB                               2649  H F45 ‡65     #120
03945  7        MZ   ZONE11       SUB3AB&009                          2656  Y C3V F44     #120
03950  7        SBR  SUB3AC&010   LSYB                               2663  H G08 ‡76     #121
03955  7        MZ   ZONE11       SUB3AC&009                          2670  Y C3V G07     #121
03960  7        SBR  SUB3AD&010   LSX2B                              2677  H G71 ‡87     #121
03965  7        MZ   ZONE11       SUB3AD&009                          2684  Y C3V G70     #121
03970  7        SBR  SUB3AE&010   LSY2B                              2691  H H34 ‡98     #121
03975  7        MZ   ZONE11       SUB3AE&009                          2698  Y C3V H33     #122
03980  7        SBR  SUB3AF&010   LLSXYB                             2705  H H97 /09     #122
03985  7        MZ   ZONE11       SUB3AF&009                          2712  Y C3V H96     #122
03990  7        SBR  SUB3AJ&003   NLLB                               2719  H I55 /20     #122
03995  7        MZ   ZONE11       SUB3AJ&002                          2726  Y C3V I54     #122
04000  7        SBR  SUB3AG&010   ALFAB                              2733  H 00Y T26     #123
04005  7        MZ   ZONE11       SUB3AG&009                          2740  Y C3V 00X     #123
04010  7        SBR  SUB3AH&010   BETAB                              2747  H 07T T58     #123
04015  7        MZ   ZONE11       SUB3AH&009                          2754  Y C3V 07S     #123
04020  7        SBR  SUB3AI&010   RB                                 2761  H 15‡ T90     #123
04025  7        MZ   ZONE11       SUB3AI&009                          2768  Y C3V 14Z     #124
04030  7 B522   MCW  TOTLEN       MESAG1                              2775  M Q9X Q1U     #124
04035  7 B523   MCW  STDLEN       MESAG2                              2782  M R3V Q3Z     #124
04040  7        SBR  SUB3AB&003   EDTWD7                              2789  H F38 &4V     #124
04045  7        SBR  SUB3AD&003   EDTWD7                              2796  H G64 &4V     #124
```

```
04050  7        SBR SUB3AF&003  EDTWD7                          2803  H H90 &4V     #125
04055  4 B525   B   SUB3A                       PRINT TABLE 7   2810  B E69         #125
04060  7        MCW ALFAA       ALFAT                           2814  M 966 D3W     #125
04065  7        MCW ALFAA &008  ALFAM                           2821  M 974 D4U     #125
04070  7        MCW ALFAA &016  ALFAF                           2828  M 982 D5S     #125
04075  7        MCW ALFAA &024  ALFAU                           2835  M 990 D6‡     #125
04080  4 B600   CS  1414                        CLEAR TABULATION 2842  / U14        #126
04085  1        CS                              AREA            2846  /             #126
04090  1        CS                                              2847  /             #126
04095  1        CS                                              2848  /             #126
04100  1        CS                                              2849  /             #126
04105  1        CS                                              2850  /             #126
04110  1        CS                                              2851  /             #126
04115  1        CS                                              2852  /             #126
04120  1        CS                                              2853  /             #127
04125  1        CS                                              2854  /             #127
04130  1        CS                                              2855  /             #127
04135  1        CS                                              2856  /             #127
04140  7 B610   SW  0335      1 0655      2     SET WORD MARKS  2857  , 3T5 6N5    #127
04145  7        A   C8          0089            IN NEW TAB AREA 2864  A C1W 089    #127
04150  7        A   C4          0094                            2871  A COU 094    #127
04155  7        C   0089        C320                            2878  C 089 C4/    #127
04160  5        B   B610                    /                   2885  B Q57 /      #128
04165  4 B620   B   SUB3X                       ZERO INDEX REGS 2890  B M9Z        #128
04170  7 B625   SW  0815      1 1231      2                     2894  , 8/5 SL1    #128
04175  7        A   C8          0089                            2901  A C1W 089    #128
04180  7        A   C4          0094                            2908  A COU 094    #128
04185  7        C   0089        C416                            2915  C 089 F9T    #128
04190  5        B   B625                    /                   2922  B Q94 /      #129
04195  4        B   SUB3X                       ZERO INDEX REGS 2927  B M9Z        #129
04200  4 B630   B   SUB8X                       RECALL TAPE PROG 2931 B N2S        #129
04205
04210
```

```
04215              SUBROUTINES
04220
04225  4 SQRUT  SBR OUT   &003                    SUBROUTINE TO      2935  H A33          #129
04230  4        S   WKR                           CALCULATE SQUARE   2939  S A94          #129
04235  4        SW  WKR   -020                    ROOTS              2943  , A74          #129
04240  7        MCW HY5         WKR   -011        POS CONSTANT       2947  M B04 A83     #129
04245  7        M   RAD         WKR               MPY BY N           2954  @ A63 A94     #129
04250  7        A   HY5         WKR   -010        ADD K TO HIGH      2961  A B04 A84     #130
04255  7        MCW WKR   -010  TEMPY             STORE RESULT       2968  M A84 B14     #130
04260  4        S   WKR                           CLR WORK AREA      2975  S A94         #130
04265  7 LUPSR  MCW HY5         WKR   -011        POS CONSTANT       2979  M B04 A83     #130
04270  7        M   RAD         WKR               MPY BY N           2986  @ A63 A94     #130
04275  7        MCW WKR   -010  TEMPX             STORE HI ORDER     2993  M A84 B34     #130
04280  4        CW  WKR   -020                    CLR WD MARK        3000  ¤ A74         #131
04285  7        D   TEMPY        WKR   -019        DIV BY TEMPY       3004  % B14 A75     #131
04290  7        MCW WKR   -011  TEMPX             STORE QUOTIENT     3011  M A83 B34     #131
04295  4        S   WKR                           CLEAR WORK AREA    3018  S A94         #131
04300  7        MCW TEMPX       WKR   -011        POSITION Q         3022  M B34 A83     #131
04305  7        A   HY5         WKR   -021        ADD K TO HIGH      3029  A B04 A73     #131
04310  7        M   TEMPY        WKR               MULT BY TEMPY      3036  @ B14 A94     #132
04315  7        A   TEMPX       WKR   -020        ADD Q              3043  A B34 A74     #132
04320  7        MCW WKR   -020  TEMPZ             STORE              3050  M A74 B24     #132
04325  4        S   WKR                           CLR WORK AREA      3057  S A94         #132
04330  7        MCW TEMPZ       WKR               POS TEMPZ          3061  M B24 A94     #132
04335  7        S   TEMPY        WKR               SBTR TEMPY         3068  S B14 A94     #132
04340  7        MZ  WKR         ZONE              STORE ZONE         3075  Y A94 A53     #133
04345  7        MN  WKR         TEMPX             STORE REMAIN       3082  D A94 B34     #133
04350  7        MCW WKR   -001  TEMPX -001                           3089  M A93 B33     #133
04355  7        C   TEMPX       KZTEN             ZERO TEST          3096  C B34 B54     #133
04360  5        B   EXIT                      S                      3103  B A16 S       #133
04365  8        BWZ TR2         ZONE        K                      3108  V A34 A53 K   #133
04370  7 EXIT   MCW TEMPY       ROOT                               3116  M B14 B44     #134
```

```
04375  7         MZ   ROOT   -001  ROOT                                3123  Y B43 B44     #134
04380  4 CUT     B    0000                                            3130  B 000         #134
04385  4 TR2     S    WKR                                             3134  S A94         #134
04390  4         SW   WKR    -020                                    3138  , A74         #134
04395  7         MCW  TEMPZ        TEMPY                             3142  M B24 B14     #134
04400  4         B    LUPSR                       END SQRUT SUB      3149  B R79         #134
04405
04410  1 ZONE    DCW  *                           CONSTANTS FOR      3153    DCW         #134
04415 10 RAD     DCW  *                           SQUARE ROOT        3163    DCW         #135
04420 31 WKR     DCW  *                                              3194    DCW         #135
04425 10 HY5     DCW  *            &500000000&                       3204    DCW         #136
04430 10 TEMPY   DCW  *                                              3214    DCW         #136
04435 10 TEMPZ   DCW  *                                              3224    DCW         #136
04440 10 TEMPX   DCW  *                                              3234    DCW         #136
04445 10 ROOT    DCW  *                           END CONSTANTS      3244    DCW         #137
04450 10 KZTEN   DCW  *            0000000000    FOR SQRUT SUB      3254    DCW         #137
04455
04460
04465  4 SUB2X   SBR  EXIT2X&003                 SUBROUTINE TO      3255  H C06         #137
04470  7         MCW  A            TABLE7        USE TOTAL VS       3259  M R6S 09X     #137
04475  7         SBR  SUB6B &021   0020          FORK FOR TABLE7A   3266  H 94‡ 020     #137
04480  4         SBR  SUB6B &028                                     3273  H 94X         #138
04485  4         SBR  SUB6B &063                                     3277  H 98S         #138
04490  4         SBR  SUB6B &070                                     3281  H 98Z         #138
04495  4         SBR  SUB6B &098                                     3285  H ‡1X         #138
04500  7         MCW  F            SENSES-001                        3289  M H5Z H6W     #138
04505  7         SBR  B523  &003   FRKLEN                            3296  H P85 R4W     #138
04510  4 EXIT2X  B    0000                       END SUB TWO X      3303  B 000         #138
04515
04520
04525  4 SUB2Y   SBR  EXIT2Y&003                 SUBROUTINE TO      3307  H C88         #138
04530  7         MCW  B            TABLE7        USE STANDARD VS    3311  M R6T 09X     #139
```

```
04535  7         SBR SUB6B &021  0020            FORK FOR TABLE7B  3318  H 94‡ 020     #139
04540  4         SBR SUB6B &028                                    3325  H 94X         #139
04545  4         SBR SUB6B &063                                    3329  H 98S         #139
04550  4         SBR SUB6B &070                                    3333  H 98Z         #139
04555  4         SBR SUB6B &098                                    3337  H ‡1X         #139
04560  7         MCW G           SENSES                            3341  M H6‡ H6X     #139
04565  7         SBR SUB6B &007  0017                              3348  H 92W 017     #140
04570  4         SBR SUB6B &014                                    3355  H 93T         #140
04575  4         SBR SUB6B &035                                    3359  H 95U         #140
04580  4         SBR SUB6B &042                                    3363  H 96/         #140
04585  4         SBR SUB6B &091                                    3367  H ‡1‡         #140
04590  7         SBR B522  &003  STDLEN                            3371  H P78 R3V     #140
04595  7         SBR B523  &003  FRKLEN                            3378  H P85 R4W     #140
04600  4 EXIT2Y  B   0000                        END SUB TWO Y     3385  B 000         #140
04605
04610
04615  4 SUB3    SBR EXIT3 &003                 SUBROUTINE FOR    3389  H E68         #141
04620  2         CC                         1   CARRIAGE CONTROL  3393  F 1           #141
04625  4         CS  0299                       TABLE 4           3395  / 299         #141
04630  7         MCW TABLE4      0257                             3399  M 00U 257     #141
04635  1         W                                                3406  2             #141
04640  4         CS  0299                                         3407  / 299         #141
04645  2         CC                         K                     3411  F K           #141
04650  7         MCW SPEC        0213                             3413  M 00Y 213     #141
04655  7         MCW SEX         0220                             3420  M 01/ 220     #142
04660  7         MCW TAGE        0227                             3427  M 01U 227     #142
04665  7         MCW TOTAL       0234                             3434  M 01Z 234     #142
04670  7         MCW STAND       0241                             3441  M 02U 241     #142
04675  7         MCW FORK        0248                             3448  M 02Z 248     #142
04680  7         MCW WEIGHT      0255                             3455  M 03V 255     #143
04685  7         MCW LOG         0260                             3462  M 03Y 260     #143
04690  7         MCW LOG         0268                             3469  M 03Y 268     #143
```

```
04695  7          MCW KTL          0275                                3476  M 04/ 275      #143
04700  7          MCW KSL          0282                                3483  M 04U 282      #143
04705  7          MCW KFL          0289                                3490  M 04X 289      #144
04710  7          MCW SCALE        0297                                3497  M 05S 297      #144
04715  1          W                                                    3504  2              #144
04720  4          CS  0299                                             3505  / 299          #144
04725  7          MCW NO           0212                                3509  M 05U 212      #144
04730  7          MCW LENGTH       0234                                3516  M 06‡ 234      #144
04735  7          MCW LENGTH       0241                                3523  M 06‡ 241      #144
04740  7          MCW LENGTH       0248                                3530  M 06‡ 248      #145
04745  7          MCW T.L          0260                                3537  M 06T 260      #145
04750  7          MCW WEIGHT       0269                                3544  M 03V 269      #145
04755  7          MCW RADIUS       0296                                3551  M 07T 296      #145
04760  1          W                                                    3558  2              #145
04765  4          CS  0299                                             3559  / 299          #145
04770  2          CC                           K                       3563  F K            #145
04775  4 EXIT3     B   0000                         END SUB THREE       3565  B 000          #145
04780
04785
04790  4 SUB3A     SBR EXIT3A&003                   SUBROUTINE TO       3569  H 23Z          #146
04795  2          CC                           1   PRINT TABLE FIVE    3573  F 1            #146
04800  4          CS  0299                         SIX AND SEVEN       3575  / 299          #146
04805  7          MCW TABLE5       0256                                3579  M 08/ 256      #146
04810  1          W                                                    3586  2              #146
04815  4          CS  0299                                             3587  / 299          #146
04820  2          CC                           L                       3591  F L            #146
04825  7          MCW TOTAL        0237                                3593  M 01Z 237      #146
04830  7          MCW MALE         0257                                3600  M R5/ 257      #147
04835  7          MCW FEMALE       0277                                3607  M POT 277      #147
04840  7          MCW UNSEX        0297                                3614  M R6/ 297      #147
04845  1          W                                                    3621  2              #147
04850  4          CS  0299                                             3622  / 299          #147
04855  2          CC                           L                       3626  F L            #147
```

```
04860  7 SUB3AA MCW SUMX        0217                          3628  M P1/ 217     #147
04865  7 SUB3AB LCA EDTWD3      0239      1                   3635  L &0S 2T9     #148
04870  7        MCE LSX       2 0239      1                   3642  E 3M5 2T9     #148
04875  7        C   0239      1 EDTWDB                        3649  C 2T9 R6W     #148
04880  5        B   SUB3Y                   S                 3656  B 24‡ S       #148
04885  7        A   C20         0089                          3661  A C5Z 089     #148
04890  7        A   C66         0094                          3668  A C4U 094     #148
04895  7        C   0089        C80                           3675  C 089 C6S     #149
04900  5        B   SUB3AB                  /                 3682  B F35 /       #149
04905  4        B   SUB3Z                                     3687  B 25V         #149
04910  7        MCW SUMY        0217                          3691  M P1Z 217     #149
04915  7 SUB3AC LCA EDTWD3      0239      1                   3698  L &0S 2T9     #149
04920  7        MCE WSY       2 0239      1                   3705  E 3N6 2T9     #149
04925  7        C   0239      1 EDTWDB                        3712  C 2T9 R6W     #150
04930  5        B   SUB3Y                   S                 3719  B 24‡ S       #150
04935  7        A   C20         0089                          3724  A C5Z 089     #150
04940  7        A   C66         0094                          3731  A C4U 094     #150
04945  7        C   0089        C80                           3738  C 089 C6S     #150
04950  5        B   SUB3AC                  /                 3745  B F98 /       #150
04955  4        B   SUB3Z                                     3750  B 25V         #151
04960  7        MCW SUMXX       0218                          3754  M P2Y 218     #151
04965  7 SUB3AD LCA EDTWD4      0239      1                   3761  L &1U 2T9     #151
04970  7        MCE LSX2      2 0239      1                   3768  E 307 2T9     #151
04975  7        C   0239      1 EDTWDD                        3775  C 2T9 R7V     #151
04980  5        B   SUB3Y                   S                 3782  B 24‡ S       #151
04985  7        A   C20         0089                          3787  A C5Z 089     #152
04990  7        A   C66         0094                          3794  A C4U 094     #152
04995  7        C   0089        C80                           3801  C 089 C6S     #152
05000  5        B   SUB3AD                  /                 3808  B G61 /       #152
05005  4        B   SUB3Z                                     3813  B 25V         #152
05010  7        MCW SUMYY       0218                          3817  M P3X 218     #152
05015  7 SUB3AE LCA EDTWD4      0239      1                   3824  L &1U 2T9     #153
```

```
05020  7         MCE WSY2      2 0239      1
05025  7         C   0239      1 EDTWDD
05030  5         B   SUB3Y                    S
05035  7         A   C20         0089
05040  7         A   C66         0094
05045  7         C   0089        C80
05050  5         B   SUB3AE                   /
05055  4         B   SUB3Z
05060  7         MCW SUMXY       0218
05065  7 SUB3AF  LCA EDTWD4      0239      1
05070  7         MCE LWSXY     2 0239      1
05075  7         C   0239      1 EDTWDD
05080  5         B   SUB3Y                    S
05085  7         A   C20         0089
05090  7         A   C66         0094
05095  7         C   0089        C80
05100  5         B   SUB3AF                   /
05105  4         B   SUB3Z
05110  2         CC                           J
05115  7         MCW NOFISH      0219
05120  7 SUB3AJ  MCS NLW       2 0239      1
05125  7         A   C20         0089
05130  7         A   C66         0094
05135  7         C   0089        C80
05140  5         B   SUB3AJ                   /
05145  4         B   SUB3Z
05150  2         CC                           K
05155  7         MCW TLOGC       0214
05160  7 SUB3AG  LCA EDTWD5      0240      1
05165  7         MCE LOGC      2 0240      1
05170  7         C   0239      1 EDTWDE
05175  5         B   SUB3Y                    S
```

PAGE# 32

```
3831  E 3P8 2T9    #153
3838  C 2T9 R7V    #153
3845  B 24‡ S      #153
3850  A C5Z 089    #153
3857  A C4U 094    #153
3864  C 089 C6S    #154
3871  B H24 /      #154
3876  B 25V        #154
3880  M P4W 218    #154
3887  L &1U 2T9    #154
3894  E 3Q9 2T9    #154
3901  C 2T9 R7V    #155
3908  B 24‡ S      #155
3913  A C5Z 089    #155
3920  A C4U 094    #155
3927  C 089 C6S    #155
3934  B H87 /      #155
3939  B 25V        #156
3943  F J          #156
3945  M P5W 219    #156
3952  Z 4-0 2T9    #156
3959  A C5Z 089    #156
3966  A C4U 094    #156
3973  C 089 C6S    #156
3980  B I52 /      #157
3985  B 25V        #157
3989  F K          #157
3991  M P6/ 214    #157
3998  L &2U 2U0    #157
4005  E 6-6 2U0    #157
4012  C 2T9 R8/    #157
4019  B 24‡ S      #158
```

```
05180  7          A    C20          0089                          4024  A C5Z 089      #158
05185  7          A    C8           0094                          4031  A C1W 094      #158
05190  7          C    0089         C80                           4038  C 089 C6S      #158
05195  5          B    SUB3AG                    /                4045  B I98 /        #158
05200  4          B    SUB3Z                                      4050  B 25V          #158
05205  2          CC                             J                4054  F J            #158
05210  7          MCW  TN           0213                          4056  M P6V 213      #159
05215  7 SUB3AH   LCA  EDTWD5       0240       1                  4063  L &2U 2U0      #159
05220  7          MCE  N          2 0240       1                  4070  E 6L8 2U0      #159
05225  7          C    0239       1 EDTWDE                        4077  C 2T9 R8/      #159
05230  5          B    SUB3Y                     S                4084  B 24‡ S        #159
05235  7          A    C20          0089                          4089  A C5Z 089      #159
05240  7          A    C8           0094                          4096  A C1W 094      #160
05245  7          C    0089         C80                           4103  C 089 C6S      #160
05250  5          B    SUB3AH                    /                4110  B 06T /        #160
05255  4          B    SUB3Z                                      4115  B 25V          #160
05260  2          CC                             J                4119  F J            #160
05265  7          MCW  CORLAT       0220                          4121  M P7W 220      #160
05270  1          W                                               4128  2              #160
05275  4          CS   0299                                       4129  / 299          #160
05280  7          MCW  COEFFT       0220                          4133  M P8X 220      #161
05285  7 SUB3AI   LCA  EDTWD6       0240       1                  4140  L &3U 2U0      #161
05290  7          MCE  R          2 0240       1                  4147  E 6P0 2U0      #161
05295  7          C    0239       1 EDTWDC                        4154  C 2T9 R7‡      #161
05300  5          B    SUB3Y                     S                4161  B 24‡ S        #161
05305  7          A    C20          0089                          4166  A C5Z 089      #161
05310  7          A    C8           0094                          4173  A C1W 094      #162
05315  7          C    0089         C80                           4180  C 089 C6S      #162
05320  5          B    SUB3AI                    /                4187  B 14‡ /        #162
05325  4          B    SUB3Z                                      4192  B 25V          #162
05330  2          CC                             L                4196  F L            #162
05335  7          MCW  MESAG1       0267                          4198  M Q1U 267      #162
05340  1          W                                               4205  2              #162
```

```
05345  4         CS   0299                                          4206  / 299          #162
05350  7         MCW  MESAG2      0267                             4210  M Q3Z 267      #163
05355  1         W                                                 4217  2              #163
05360  4         CS   0299                                          4218  / 299          #163
05365  2         CC                          J                     4222  F J            #163
05370  7         MCW  MESAG3      0268                             4224  M Q6W 268      #163
05375  1         W                                                 4231  2              #163
05380  4         CS   0299                                          4232  / 299          #163
05385  4 EXIT3A  B    0000                        END SUB THREE A   4236  B 000         #163
05390
05395
05400  4 SUB3Y   SBR  EXIT3Y&003                  AUXILLARY         4240  H 25U          #164
05405  7         MCW  BLANKY      0240      1     SUBROUTINE FOR    4244  M D2V 2U0      #164
05410  4 EXIT3Y  B    0000                        SUB THREE A       4251  B 000         #164
05415
05420
05425  4 SUB3Z   SBR  EXIT3Z&003                  AUXILLARY         4255  H 27/          #164
05430  4         B    SUB3X                       SUBROUTINE FOR    4259  B M9Z          #164
05435  1         W                                SUB THREE A       4263  2              #164
05440  4         CS   0299                                          4264  / 299          #164
05445  4 EXIT3Z  B    0000                        END SUB 3Z        4268  B 000         #164
05450
05455
05460  4 SUB5    SBR  EXIT5 &003                  SUBROUTINE TO     4272  H 65‡          #165
05465  7         MCW  ZERO19      NEWNUM          CALCULATE         4276  M &8W B7X     #165
05470  7         C    NUMBER      K10             LOGARITHMS        4283  C B5X B6/     #165
05475  5         B    SUB5A                   U                     4290  B 32T U        #165
05480  7         C    NUMBER      K100                              4295  C B5X B6V     #165
05485  5         B    SUB5B                   U                     4302  B 34/ U        #165
05490  7         C    NUMBER      K1000                             4307  C B5X B6Z     #166
05495  5         B    SUB5C                   U                     4314  B 35Z U        #166
05500  4         B    SUB5D                                         4319  B 37X          #166
```

```
05505  7 SUB5A  MN   ZEROS1       CHARIS                          4323  D  &4W  B7‡      #166
05510  7        MCW  NUMBER       NEWNUM-005                      4330  M  B5X  B7S      #166
05515  4        B    SUB5X                                        4337  B  39V           #166
05520  7 SUB5B  MN   ONE          CHARIS                          4341  D  B7Y  B7‡      #166
05525  7        MCW  NUMBER       NEWNUM-004                      4348  M  B5X  B7T      #167
05530  4        B    SUB5X                                        4355  B  39V           #167
05535  7 SUB5C  MN   TWO          CHARIS                          4359  D  B7Z  B7‡      #167
05540  7        MCW  NUMBER       NEWNUM-003                      4366  M  B5X  B7U      #167
05545  4        B    SUB5X                                        4373  B  39V           #167
05550  7 SUB5D  MN   THREE        CHARIS                          4377  D  B8‡  B7‡      #167
05555  7        MCW  NUMBER       NEWNUM-002                      4384  M  B5X  B7V      #168
05560  4        B    SUB5X                                        4391  B  39V           #168
05565  7 SUB5X  S    CONSTA       NEWNUM                          4395  S  B8W  B7X      #168
05570  8        BWZ  SUB5N        NEWNUM        K                 4402  V  42/  B7X  K   #168
05575  7        ZA   ZEROX        DIVIS3-024                      4410  &  &6T  B0/      #168
05580  4        B    SUB5E                                        4417  B  42Y           #168
05585  7 SUB5N  ZA   ZEROY        DIVIS3-024                      4421  &  C3S  B0/      #169
05590  7 SUB5E  MCW  NEWNUM       DIVIS3-030                      4428  M  B7X  A9V      #169
05595  7        MZ   ZONES        DIVIS3-030                      4435  Y  C3T  A9V      #169
05600  7        A    CONSTB       NEWNUM                          4442  A  B9S  B7X      #169
05605  7        D    NEWNUM       DIVIS3-036                      4449  %  B7X  A8Z      #169
05610  7        A    C5           DIVIS3-032                      4456  A  COX  A9T      #170
05615  7        MZ   DIVIS3-032   DIVIS3-033                      4463  Y  A9T  A9S      #170
05620  7        MCW  DIVIS3-033   FACTOR                          4470  M  A9S  C6X      #170
05625  7        MCW  CONSTC       ADDUP                           4477  M  C7S  C7X      #170
05630  7        ZA   FACTOR       MAREA1-006                      4484  &  C6X  C9S      #170
05635  7        M    CONSTD       MAREA1                          4491  @  C8S  C9Y      #171
05640  7        A    C5           MAREA1-004                      4498  A  COX  C9U      #171
05645  7        MZ   MAREA1       MAREA1-005                      4505  Y  C9Y  C9T      #171
05650  4        SW   MAREA1-009                                   4512  ,  C8Z           #171
05655  7        A    MAREA1-005   ADDUP                           4516  A  C9T  C7X      #171
05660  4        CW   MAREA1-009                                   4523  ¤  C8Z           #171
```

```
05665  7          ZA   FACTOR       MAREA1-006                          4527  & C6X C9S      #172
05670  7          M    FACTOR       MAREA1                              4534  @ C6X C9Y      #172
05675  7          A    C5           MAREA1-004                          4541  A C0X C9U      #172
05680  7          MCW  MAREA1-005   HOLDIT                             4548  M C9T D0Z      #172
05685  7          ZA   FACTOR       MAREA1-006                          4555  & C6X C9S      #172
05690  7          M    HOLDIT       MAREA1                              4562  @ D0Z C9Y      #173
05695  7          A    C5           MAREA1-004                          4569  A C0X C9U      #173
05700  7          MZ   MAREA1       MAREA1-005                          4576  Y C9Y C9T      #173
05705  7          MCW  MAREA1-005   CUBIC                               4583  M C9T D1U      #173
05710  7          ZA   CUBIC        MAREA1-006                          4590  & D1U C9S      #173
05715  7          M    CONSTE       MAREA1                              4597  @ C8X C9Y      #174
05720  7          A    C5           MAREA1-004                          4604  A C0X C9U      #174
05725  7          MZ   MAREA1       MAREA1-005                          4611  Y C9Y C9T      #174
05730  4          SW   MAREA1-009                                       4618  , C8Z          #174
05735  7          A    MAREA1-005   ADDUP                               4622  A C9T C7X      #174
05740  4          CW   MAREA1-009                                       4629  ¤ C8Z          #174
05745  7          MCW  ADDUP        LOGISM                              4633  M C7X D0U      #175
05750  7          MN   CHARIS       LOGISM-005                          4640  D B7‡ C9Z      #175
05755  4 EXIT5    B    0000                        END SUB FIVE         4647  B 000          #175
05760
05765
05770  4 SUB6     SBR  EXIT6 &003                  SUBROUTINE TO        4651  H 78U          #175
05775  7          A    RGLOGL       LSX             TALLY FOR            4655  A B5‡ 345      #175
05780  7          A    RGLOGL       LSX        1    LENGTH WEIGHT        4662  A B5‡ 3U5      #175
05785  7          A    RGLOGW       WSY             LOG REGRESSION       4669  A B5T 356      #176
05790  7          A    RGLOGW       WSY        1    TABLE 5              4676  A B5T 3V6      #176
05795  7          ZA   RGLOGL       MAREA1-008                          4683  & B5‡ C9‡      #176
05800  7          M    RGLOGL       MAREA1-004                          4690  @ B5‡ C9U      #176
05805  7          A    MAREA1-004   LSX2                                4697  A C9U 367      #176
05810  7          A    MAREA1-004   LSX2       1                       4704  A C9U 3W7      #177
05815  7          ZA   RGLOGW       MAREA1-008                          4711  & B5T C9‡      #177
05820  7          M    RGLOGW       MAREA1-004                          4718  @ B5T C9U      #177
```

```
05825  7         A   MAREA1-004  WSY2                                4725  A C9U 378     #177
05830  7         A   MAREA1-004  WSY2       1                        4732  A C9U 3X8     #177
05835  7         ZA  RGLOGL      MAREA1-008                          4739  & B5‡ C9‡     #178
05840  7         M   RGLOGW      MAREA1-004                          4746  @ B5T C9U     #178
05845  7         A   MAREA1-004  LWSXY                               4753  A C9U 389     #178
05850  7         A   MAREA1-004  LWSXY      1                        4760  A C9U 3Y9     #178
05855  7         A   C1          NLW                                 4767  A B9V 400     #178
05860  7         A   C1          NLW        1                        4774  A B9V 4‡0     #179
05865  4 EXIT6   B   0000                        END SUB SIX         4781  B 000         #179
05870
05875
05880  4 SUB6A   SBR EXIT6A&003                 SUBROUTINE TO       4785  H 91Y         #179
05885  7         A   SCALER      LSXA           TALLY FOR           4789  A &6X 705     #179
05890  7         A   SCALER      LSXA       1   SCALE RADIUS        4796  A &6X 7‡5     #179
05895  7         A   0014        SSYA           BODY LENGTH         4803  A 014 716     #179
05900  7         A   0014        SSYA       1   REGRESSION          4810  A 014 7/6     #180
05905  7         ZA  SCALER      MAREA1-007     TABLE 6             4817  & &6X C9/     #180
05910  7         M   SCALER      MAREA1-002                         4824  @ &6X C9W     #180
05915  7         A   MAREA1-002  LSX2A                              4831  A C9W 727     #180
05920  7         A   MAREA1-002  LSX2A      1                       4838  A C9W 7S7     #180
05925  7         ZA  0014        MAREA1-008                         4845  & 014 C9‡     #181
05930  7         M   0014        MAREA1-004                         4852  @ 014 C9U     #181
05935  7         A   MAREA1-004  SSY2A                              4859  A C9U 738     #181
05940  7         A   MAREA1-004  SSY2A      1                       4866  A C9U 7T8     #181
05945  7         ZA  SCALER      MAREA1-007                         4873  & &6X C9/     #181
05950  7         M   0014        MAREA1-003                         4880  @ 014 C9V     #182
05955  7         A   MAREA1-003  LSSXYA                             4887  A C9V 749     #182
05960  7         A   MAREA1-003  LSSXYA     1                       4894  A C9V 7U9     #182
05965  7         A   C1          NLSA                               4901  A B9V 760     #182
05970  7         A   C1          NLSA       1                       4908  A B9V 7W0     #182
05975  4 EXIT6A  B   0000                        END SUB SIX A       4915  B 000         #182
05980
05985
```

```
05990  4 SUB6B  SBR EXIT6B&003                    SUBROUTINE TO     4919  H ‡5S          #183
05995  7        A   0014        LSXB              TALLY FOR         4923  A 014 ‡65      #183
06000  7        A   0014        LSXB       1      TOTAL LENGTH      4930  A 014 ‡W5      #183
06005  7        A   0017        LSYB              STANDARD LENGTH   4937  A 017 ‡76      #183
06010  7        A   0017        LSYB       1      FORK LENGTH       4944  A 017 ‡X6      #183
06015  7        ZA  0014        MAREA1-008        REGRESSION        4951  & 014 C9‡      #183
06020  7        M   0014        MAREA1-004        CORRELATION       4958  @ 014 C9U      #184
06025  7        A   MAREA1-004   LSX2B             TABLE 7           4965  A C9U ‡87      #184
06030  7        A   MAREA1-004   LSX2B      1                       4972  A C9U ‡Y7      #184
06035  7        ZA  0017        MAREA1-008                          4979  & 017 C9‡      #184
06040  7        M   0017        MAREA1-004                          4986  @ 017 C9U      #184
06045  7        A   MAREA1-004   LSY2B                              4993  A C9U ‡98      #185
06050  7        A   MAREA1-004   LSY2B      1                       5000  A C9U ‡Z8      #185
06055  7        ZA  0014        MAREA1-008                          5007  & 014 C9‡      #185
06060  7        M   0017        MAREA1-004                          5014  @ 017 C9U      #185
06065  7        A   MAREA1-004   LLSXYB                             5021  A C9U /09      #185
06070  7        A   MAREA1-004   LLSXYB     1                       5028  A C9U /‡9      #186
06075  7        A   C1           NLLB                              5035  A B9V /20      #186
06080  7        A   C1           NLLB       1                      5042  A B9V /S0      #186
06085  4 EXIT6B B   0000                          END SUB SIX B     5049  B 000          #186
06090
06095
06100  4 SUB7   SBR EXIT7 &003                    SUBROUTINE TO     5053  H Y1‡          #186
06105  7        ZA  WSY       1 MAREA3-012        CALCULATE LOG C   5057  & 3V6 A2Y      #186
06110  7        M   LSX2      1 MAREA3            OR ALPHA          5064  @ 3W7 A4‡      #187
06115  7        MCW MAREA3      TEMPA                               5071  M A4‡ A6‡      #187
06120  7        ZA  LSX       1 MAREA3-012                          5078  & 3U5 A2Y      #187
06125  7        M   LWSXY     1 MAREA3                              5085  @ 3Y9 A4‡      #187
06130  4        SW  MAREA3-021                                      5092  , A1Z          #187
06135  7        S   MAREA3      TEMPA                               5096  S A4‡ A6‡      #187
06140  4        CW  MAREA3-021                                      5103  ¤ A1Z          #188
06145  7        ZA  LSX2      1 MAREA3-012                          5107  & 3W7 A2Y      #188
```

```
06150  7         M    NLW        1 MAREA3                                5114  @ 4‡0 A4‡     #188
06155  7         MCW  MAREA3       TEMPB                                5121  M A4‡ A8‡     #188
06160  7         ZA   LSX        1 MAREA3-012                           5128  & 3U5 A2Y     #188
06165  7         M    LSX        1 MAREA3                               5135  @ 3U5 A4‡     #188
06170  4         SW   MAREA3-021                                       5142  , A1Z         #189
06175  7         S    MAREA3       TEMPB                                5146  S A4‡ A8‡     #189
06180  4         CW   MAREA3-021                                       5153  ¤ A1Z         #189
06185  7 ALT7A   ZA   ZEROX        DIVIS3                               5157  & &6T B2V     #189
06190  7         MCW  TEMPA        DIVIS3-004                           5164  M A6‡ B2/     #189
06195  7         MZ   DIVIS3-004   DIVIS3                              5171  Y B2/ B2V     #189
06200  7         MZ   ZONES        DIVIS3-004                           5178  Y C3T B2/     #190
06205  7         D    TEMPB        DIVIS3-023                           5185  % A8‡ B0S     #190
06210  7         A    C5           DIVIS3-021                           5192  A C0X B0U     #190
06215  7         MZ   DIVIS3-021   DIVIS3-022                           5199  Y B0U B0T     #190
06220  7         MCW  DIVIS3-022   LOGC       2                         5206  M B0T 6-6     #190
06225  7         ZA   LOGC       2 MAREA3-015       CALCULATE N         5213  & 6-6 A2V     #191
06230  7         M    NLW        1 MAREA3-003       OR BETA             5220  @ 4‡0 A3X     #191
06235  7 ALT7B   ZA   ZEROX        TEMPA                                5227  & &6T A6‡     #191
06240  7         MCW  WSY        1 TEMPA -003                           5234  M 3V6 A5X     #191
06245  7         S    MAREA3-003   TEMPA                               5241  S A3X A6‡     #191
06250  7         ZA   ZEROX        DIVIS3-010                           5248  & &6T B1V     #192
06255  7         MCW  TEMPA        DIVIS3-013                           5255  M A6‡ B1S     #192
06260  7         MZ   DIVIS3-013   DIVIS3-010                           5262  Y B1S B1V     #192
06265  7         MZ   ZONES        DIVIS3-013                           5269  Y C3T B1S     #192
06270  7         D    LSX        1 DIVIS3-032                           5276  % 3U5 A9T     #192
06275  7         A    C5           DIVIS3-022                           5283  A C0X B0T     #193
06280  7         MZ   DIVIS3-022   DIVIS3-023                           5290  Y B0T B0S     #193
06285  7         MCW  DIVIS3-023   N          2                         5297  M B0S 6L8     #193
06290  7         ZA   LWSXY      1 MAREA3-012       CALCULATE           5304  & 3Y9 A2Y     #193
06295  7         M    NLW        1 MAREA3           CORRELATION         5311  @ 4‡0 A4‡     #193
06300  7         MCW  MAREA3       TEMPA              COEFFICIENT       5318  M A4‡ A6‡     #194
06305  7         ZA   LSX        1 MAREA3-012                           5325  & 3U5 A2Y     #194
```

```
06310  7        M    WSY        1 MAREA3                          5332  @ 3V6 A4‡      #194
06315  4        SW   MAREA3-019                                   5339  , A2/          #194
06320  7        S    MAREA3       TEMPA                           5343  S A4‡ A6‡      #194
06325  4        CW   MAREA3-019                                   5350  ¤ A2/          #194
06330  7        ZA   LSX2       1 MAREA3-012                      5354  & 3W7 A2Y      #195
06335  7        M    NLW        1 MAREA3                          5361  @ 4‡0 A4‡      #195
06340  7        MCW  MAREA3       TEMPB                           5368  M A4‡ A8‡      #195
06345  7        ZA   LSX        1 MAREA3-012                      5375  & 3U5 A2Y      #195
06350  7        M    LSX        1 MAREA3                          5382  @ 3U5 A4‡      #195
06355  4        SW   MAREA3-019                                   5389  , A2/          #195
06360  7        S    MAREA3       TEMPB                           5393  S A4‡ A8‡      #196
06365  4        CW   MAREA3-019                                   5400  ¤ A2/          #196
06370  7        ZA   WSY2       1 MAREA3-012                      5404  & 3X8 A2Y      #196
06375  7        M    NLW        1 MAREA3                          5411  @ 4‡0 A4‡      #196
06380  7        MCW  MAREA3       TEMPC                           5418  M A4‡ B4X      #196
06385  7        ZA   WSY        1 MAREA3-012                      5425  & 3V6 A2Y      #196
06390  7        M    WSY        1 MAREA3                          5432  @ 3V6 A4‡      #197
06395  4        SW   MAREA3-019                                   5439  , A2/          #197
06400  7        S    MAREA3       TEMPC                           5443  S A4‡ B4X      #197
06405  4        CW   MAREA3-019                                   5450  ¤ A2/          #197
06410  4        SW   TEMPB -014                                   5454  , A6W          #197
06415  7        ZA   TEMPB        MAREA2-016                      5458  & A8‡ A0/      #197
06420  4        CW   TEMPB -014                                   5465  ¤ A6W          #197
06425  4        SW   TEMPC -014                                   5469  , B3T          #197
06430  7        M    TEMPC        MAREA2                          5473  @ B4X A1X      #198
06435  4        CW   TEMPC -014                                   5480  ¤ B3T          #198
06440  7        C    ZERO19-012   MAREA2-024                      5484  C &7U &9T      #198
06445  5        B    SIZED                     /                  5491  B X5U /        #198
06450  7        C    ZERO19-006   MAREA2-018                      5496  C &8‡ &9Z      #198
06455  5        B    SIZEC                     /                  5503  B W7W /        #198
06460  7        C    ZERO19       MAREA2-012                      5508  C &8W A0V      #199
06465  5        B    SIZEB                     /                  5515  B V9Y /        #199
```

```
06470  7 SIZEA  MCW MAREA2-002  RAD
06475  4        B   SQRUT
06480  7        A   C5          ROOT
06485  7        ZA  ZEROX       DIVIS3-006
06490  7        MCW TEMPA       DIVIS3-014
06495  7        MZ  DIVIS3-014  DIVIS3-006
06500  7        MZ  ZONES       DIVIS3-014
06505  7        D   ROOT        DIVIS3-033
06510  7        A   C5          DIVIS3-017
06515  7        MZ  DIVIS3-017  DIVIS3-018
06520  7        MCW DIVIS3-018  R          2
06525  4        B   EXIT7
06530  7 SIZEB  MCW MAREA2-008  RAD
06535  4        B   SQRUT
06540  7        A   C5          ROOT
06545  7        ZA  ZEROX       DIVIS3-009
06550  7        MCW TEMPA       DIVIS3-014
06555  7        MZ  DIVIS3-014  DIVIS3-009
06560  7        MZ  ZONES       DIVIS3-014
06565  7        D   ROOT        DIVIS3-033
06570  7        A   C5          DIVIS3-020
06575  7        MZ  DIVIS3-020  DIVIS3-021
06580  7        MCW DIVIS3-021  R          2
06585  4        B   EXIT7
06590  7 SIZEC  MCW MAREA2-014  RAD
06595  4        B   SQRUT
06600  7        A   C5          ROOT
06605  7        ZA  ZEROX       DIVIS3-012
06610  7        MCW TEMPA       DIVIS3-014
06615  7        MZ  DIVIS3-014  DIVIS3-012
06620  7        MZ  ZONES       DIVIS3-014
06625  7        D   ROOT        DIVIS3-033
```

PAGE# 41

```
5520  M A1V A63   #199
5527  B R35       #199
5531  A C0X B44   #199
5538  & &6T B1Z   #199
5545  M A6‡ B1/   #200
5552  Y B1/ B1Z   #200
5559  Y C3T B1/   #200
5566  % B44 A9S   #200
5573  A C0X B0Y   #200
5580  Y B0Y B0X   #201
5587  M B0X 6P0   #201
5594  B Y0X       #201
5598  M A0Z A63   #201
5605  B R35       #201
5609  A C0X B44   #201
5616  & &6T B1W   #202
5623  M A6‡ B1/   #202
5630  Y B1/ B1W   #202
5637  Y C3T B1/   #202
5644  % B44 A9S   #202
5651  A C0X B0V   #203
5658  Y B0V B0U   #203
5665  M B0U 6P0   #203
5672  B Y0X       #203
5676  M A0T A63   #203
5683  B R35       #203
5687  A C0X B44   #204
5694  & &6T B1T   #204
5701  M A6‡ B1/   #204
5708  Y B1/ B1T   #204
5715  Y C3T B1/   #204
5722  % B44 A9S   #205
```

```
06630  7         A    C5            DIVIS3-023                          5729  A COX B0S      #205
06635  7         MZ   DIVIS3-023    DIVIS3-024                          5736  Y B0S B0/      #205
06640  7         MCW  DIVIS3-024    R          2                        5743  M B0/ 6P0      #205
06645  4         B    EXIT7                                             5750  B Y0X          #205
06650  7 SIZEC   MCW  MAREA2-020     RAD                                5754  M &9X A63      #205
06655  4         B    SQRUT                                             5761  B R35          #206
06660  7         A    C5            ROOT                                5765  A COX B44      #206
06665  7         ZA   TEMPA         DIVIS3-014                          5772  & A6‡ B1/      #206
06670  7         D    ROOT          DIVIS3-033                          5779  % B44 A9S      #206
06675  7         A    C5            DIVIS3-026                          5786  A COX A9Z      #206
06680  7         MZ   DIVIS3-025    DIVIS3-027                          5793  Y B0‡ A9Y      #206
06685  7         MCW  DIVIS3-027    R          2      END SUB SEVEN     5800  M A9Y 6P0      #207
06690  4 EXIT7    B    0000                                              5807  B 000          #207
06695
06700
06705  4 SUB2V   SBR  EXIT2V&003                   SUBROUTINE TO       5811  H -4X          #207
06710  7         MCW  A             TABLE4         USE STANDARD        5815  M R6S 00U      #207
06715  7         MCW  S.L           T.L            LENGTH              5822  M 06W 06T      #207
06720  7         MCW  D             SENSES-003                         5829  M H5X H6U      #207
06725  7         SBR  B120   &038   0017                               5836  H Y99 017      #208
06730  7         MCW  S.L           MESAG1-004                         5843  M 06W Q1‡      #208
06735  7         MCW  A             TABLE5                             5850  M R6S 08/      #208
06740  7         SBR  SUB6A  &021   0017                               5857  H 80W 017      #208
06745  4         SBR  SUB6A  &028                                      5864  H 81T          #208
06750  4         SBR  SUB6A  &063                                      5868  H 84Y          #208
06755  4         SBR  SUB6A  &070                                      5872  H 85V          #208
06760  4         SBR  SUB6A  &098                                      5876  H 88T          #209
06765  7         MCW  A             TABLE6                             5880  M R6S 08Z      #209
06770  7         SBR  B510   &003   STDLEN                             5887  H N99 R3V      #209
06775  4         B    EXIT2V                                           5894  B -4U          #209
06780  4 SUB2VA   SBR  EXIT2V&003                                      5898  H -4X          #209
06785  7         SBR  B706   &003   0017                               5902  H X92 017      #209
06790  4         SBR  SUB8T  &007                                      5909  H B68          #209
```

```
06795  4         SBR SUB8T &019                                    5913  H B80          #209
06800  4         SBR SUB8T3&003                                    5917  H C10          #210
06805  4         SBR SUB8T4&003                                    5921  H C40          #210
06810  4         SBR SUB8T5&003                                    5925  H C70          #210
06815  4         SBR SUB8T6&003                                    5929  H D00          #210
06820  4         SBR SUB8T7&003                                    5933  H D30          #210
06825  4         SBR SUB8T8&003                                    5937  H D60          #210
06830  4         SBR SUB8T9&003                                    5941  H D90          #210
06835  7         SBR SUB8B &003  KSL                               5945  H &30 O4U     #210
06840  7         MCW A           TABLE8                            5952  M R6S D9X      #211
06845  7         MCW A           TABLE9                            5959  M R6S G1W      #211
06850  7         SBR SUB8A -004  STAND                             5966  H R71 O2U      #211
06855  7         MCW A           TABL10                            5973  M R6S G2X      #211
06860  7         SBR SUB3B &048  STAND                             5980  H E83 O2U      #211
06865  7         MCW S.L         MCALEN-007                        5987  M O6W G9X      #212
06870  7         SBR B809  &010  0017                              5994  H L49 O17      #212
06875  4         SBR B810  &010                                    6001  H M12          #212
06880  4         SBR B812  &003                                    6005  H L91          #212
06885  7         MCW A           TABL11                            6009  M R6S G7Y      #212
06890  7         MCW A           TABL12                            6016  M R6S H1Z      #212
06895  7         MCW A           TABL13                            6023  M R6S H2Y      #213
06900  7         MCW A           TABL14                            6030  M R6S H3X      #213
06905  7         SBR SUB8WA-009  S.L                               6037  H O2Y O6W      #213
06910  4 EXIT2V B   0000                        END SUB TWO V      6044  B 000          #213
06915
06920
06925  4 SUB2W  SBR EXIT2W&003                  SUBROUTINE TO     6048  H K8U          #213
06930  7         MCW B           TABLE4         USE FORK LENGTH   6052  M R6T O0U      #213
06935  7         MCW F.L         T.L                              6059  M O6Z O6T      #214
06940  7         MCW E           SENSES-002                       6066  M H5Y H6V      #214
06945  7         SBR B120  &038  0020                             6073  H Y99 020      #214
06950  7         MCW F.L         MESAG1-004                       6080  M O6Z Q1#      #214
```

```
06955  7         MCW B            TABLE5                    6087  M R6T 08/     #214
06960  7         SBR SUB6A &021   0020                      6094  H 80W 020     #215
06965  4         SBR SUB6A &028                             6101  H 81T         #215
06970  4         SBR SUB6A &063                             6105  H 84Y         #215
06975  4         SBR SUB6A &070                             6109  H 85V         #215
06980  4         SBR SUB6A &098                             6113  H 88T         #215
06985  7         MCW B            TABLE6                    6117  M R6T 08Z     #215
06990  7         SBR B510  &003   FRKLEN                    6124  H N99 R4W     #215
06995  4         B   EXIT2W                                 6131  B K8/         #215
07000  4 SUB2WA   SBR EXIT2W&003                             6135  H K8U         #216
07005  7         SBR B706  &003   0020                      6139  H X92 020     #216
07010  4         SBR SUB8T &007                             6146  H B68         #216
07015  4         SBR SUB8T &019                             6150  H B80         #216
07020  4         SBR SUB8T3&003                             6154  H C10         #216
07025  4         SBR SUB8T4&003                             6158  H C40         #216
07030  4         SBR SUB8T5&003                             6162  H C70         #216
07035  4         SBR SUB8T6&003                             6166  H D00         #216
07040  4         SBR SUB8T7&003                             6170  H D30         #217
07045  4         SBR SUB8T8&003                             6174  H D60         #217
07050  4         SBR SUB8T9&003                             6178  H D90         #217
07055  7         SBR SUB8B &003   KFL                       6182  H &30 04X     #217
07060  7         MCW B            TABLE8                    6189  M R6T D9X     #217
07065  7         MCW B            TABLE9                    6196  M R6T G1W     #217
07070  7         SBR SUB8A -004   FORK                      6203  H R71 02Z     #217
07075  7         MCW B            TABL10                    6210  M R6T G2X     #218
07080  7         SBR SUB3B &048   FORK                      6217  H E83 02Z     #218
07085  7         MCW F.L          MCALEN-007                6224  M 06Z G9X     #218
07090  7         SBR B809  &010   0020                      6231  H L49 020     #218
07095  4         SBR B810  &010                             6238  H M12         #218
07100  4         SBR B812  &003                             6242  H L91         #218
07105  7         MCW B            TABL11                    6246  M R6T G7Y     #219
07110  7         MCW B            TABL12                    6253  M R6T H1Z     #219
```

```
07115  7         MCW B            TABL13                                6260  M R6T H2Y      #219
07120  7         MCW B            TABL14                                6267  M R6T H3X      #219
07125  7         SBR SUB8WA-009   F.L                                   6274  H 02Y 06Z      #219
07130  4 EXIT2W  B   0000                        END SUB TWO W         6281  B 000          #219
07135
07140
07145  4 SUB4    SBR EXIT4 &003                 SUBROUTINE TO         6285  H L7‡          #220
07150  7         ZA  KLENG        MAREA2-028    CALCULATE             6289  & &4Z &8Z      #220
07155  7         M   KLENG        MAREA2-024    CONDITION             6296  @ &4Z &9T      #220
07160  7         MCW MAREA2-024   TEMPO6        FACTORS               6303  M &9T &6S      #220
07165  7         ZA  TEMPO6       MAREA2-025                          6310  & &6S &9S      #220
07170  7         M   KLENG        MAREA2-021                          6317  @ &4Z &9W      #220
07175  7         ZA  ZEROX        DIVIS3-023                          6324  & &6T B0S      #221
07180  7         MCW KWEIGT       DIVIS3-031                          6331  M &5T A9U      #221
07185  4         SW  MAREA2-029                                       6338  , &8Y          #221
07190  7         D   MAREA2-021    DIVIS3-034                          6342  % &9W A9/      #221
07195  7         A   C5           DIVIS3-033                          6349  A C0X A9S      #221
07200  7         MCW DIVIS3-034   CONDIT                              6356  M A9/ &5W      #221
07205  4         CW  MAREA2-029                                       6363  ¤ &8Y          #222
07210  4 EXIT4   B   0000                        END SUB FOUR          6367  B 000          #222
07215
07220
07225  4 TAPER   SBR ETAPEW&003                 SUBROUTINE TO         6371  H M9Y          #222
07230  7         MCW READ         TAPEWA&007    READ TAPE CARD        6375  M D6/ M3S      #222
07235  7         SBR TAPEWB&022   ERROR3        IMAGE INTO READ       6382  H M6U H8T      #222
07240  7         MCW READ         TAPEWC&012    AREA OF CORE          6389  M D6/ M8S      #222
07245  4         B   TAPEWA                                           6396  B M2V          #222
07250
07255  4 TAPEW   SBR ETAPEW&003                 SUBROUTINE TO         6400  H M9Y          #222
07260  7         MCW WRITE        TAPEWA&007    WRITE CARD IMAGE      6404  M D6S M3S      #223
07265  7         MCW WRITE        TAPEWC&012    ON TAPE               6411  M D6S M8S      #223
07270  7         SBR TAPEWB&022   TAPEWC                              6418  H M6U M7‡      #223
07275
```

```
07280  8 TAPEWA MCW %U1          0001        W                        6425  M %U1 001 W    #223
07285  5        B   TAPEWB                   L                        6433  B M4S L        #223
07290  4        B   OTAPEW                                            6438  B M8Y          #223
07295  5 TAPEWB CU  %U1                      B                        6442  U %U1 B        #224
07300  7        A   C1          COUNT1                                6447  A B9V C3Y      #224
07305  7        C   COUNT1      C10                                   6454  C C3Y C2S      #224
07310  5        B   TAPEWC                   S                        6461  B M7‡ S        #224
07315  4        B   TAPEWA                                            6466  B M2V          #224
07320  5 TAPEWC CU  %U1                      E                        6470  U %U1 E        #224
07325  8        MCW %U1          0001        W                        6475  M %U1 001 W    #224
07330  5        B   ERROR2                   L                        6483  B H7W L        #225
07335  7 OTAPEW SBR COUNT1       0000                                  6488  H C3Y 000      #225
07340  4 ETAPEW B   0000                         END TAPE WRITE       6495  B 000          #225
07345
07350
07355  4 SUB3X  SBR EXIT3X&003                  SUBROUTINE TO        6499  H N2/          #225
07360  7        SBR 0089         0000           ZERO INDEX REGS      6503  H 089 000      #225
07365  4        SBR 0094                        ONE TWO THREE        6510  H 094          #225
07370  4        SBR 0099                                             6514  H 099          #225
07375  4 EXIT3X B   0000                         END SUB THREE X      6518  B 000          #225
07380
07385
07390  4 SUB8X  SBR EXIT8X&003                  SUBROUTINE TO        6522  H N9W          #226
07395  8 SUB8XA LCA %U2          1559        R  BRING IN REST        6526  L %U2 V59 R    #226
07400  5        B   SUB8XC                   L  OF PROGRAM FROM      6534  B N6V L        #226
07405  7 SUB8XB SBR COUNT1       0000           TAPE                 6539  H C3Y 000      #226
07410  5        B   SUB2VA                   D  WHICH LENGTH         6546  B Y9Y D        #226
07415  5        B   SUB2WA                   E  WHICH LENGTH         6551  B J3V E        #226
07420  5        CU  %U2                      R                        6556  U %U2 R        #226
07425  4        B   B699                                             6561  B W30          #227
07430  5 SUB8XC CU  %U2                      R                        6565  U %U2 R        #227
07435  7        A   C1          COUNT1                                6570  A B9V C3Y      #227
```

```
07440  7         C   COUNT1      C10                                  6577  C C3Y C2S     #227
07445  5         B   ERROR6                   S                       6584  B IOU S       #227
07450  4         B   SUB8XA                                           6589  B N2W         #227
07455  4 EXIT8X  B   0000                        END SUB EIGHT X      6593  B 000         #227
07460
07465
07470  8 TABLE4  DCW *           TABLE 4                              6604    DCW         #228
07475  4 SPEC    DCW *           SPEC                                 6608    DCW         #228
07480  3 SEX     DCW *           SEX                                  6611    DCW         #228
07485  3 TAGE    DCW *           AGE                                  6614    DCW         #228
07490  5 TOTAL   DCW *           TOTAL                                6619    DCW         #228
07495  5 STAND   DCW *           STAND                                6624    DCW         #228
07500  5 FORK    DCW *           FORK                                 6629    DCW         #228
07505  6 WEIGHT  DCW *           WEIGHT                               6635    DCW         #228
07510  3 LOG     DCW *           LOG                                  6638    DCW         #229
07515  3 KTL     DCW *           KTL                                  6641    DCW         #229
07520  3 KSL     DCW *           KSL                                  6644    DCW         #229
07525  3 KFL     DCW *           KFL                                  6647    DCW         #229
07530  5 SCALE   DCW *           SCALE                                6652    DCW         #229
07535  2 NO      DCW *           NO                                   6654    DCW         #229
07540  6 LENGTH  DCW *           LENGTH                               6660    DCW         #229
07545  3 T.L     DCW *           T.L                                  6663    DCW         #229
07550  3 S.L     DCW *           S.L                                  6666    DCW         #230
07555  3 F.L     DCW *           F.L                                  6669    DCW         #230
07560  4 RADIUS  DCW *            RAD                                 6673    DCW         #230
07565  8 TABLE5  DCW *           TABLE 5                              6681    DCW         #230
07570  8 TABLE6  DCW *           TABLE 6                              6689    DCW         #230
07575  8 TABLE7  DCW *           TABLE 7                              6697    DCW         #230
07580  6 FEMALE  DCW *           FEMALE                               6703    DCW         #230
07585  8 SUMX    DCW *           SUM OF X                             6711    DCW         #231
07590  8 SUMY    DCW *           SUM OF Y                             6719    DCW         #231
07595  9 SUMXX   DCW *           SUM OF XX                            6728    DCW         #231
07600  9 SUMYY   DCW *           SUM OF YY                            6737    DCW         #231
```

```
07605  9 SUMXY  DCW *          SUM OF XY                          6746    DCW        #232
07610 10 NOFISH DCW *          NO OF FISH                         6756    DCW        #232
07615  5 TLOGC  DCW *          LOG C                              6761    DCW        #232
07620  4 TN     DCW *          N                                  6765    DCW        #232
07625 11 CORLAT DCW *          CORRELATION                        6776    DCW        #232
07630 11 COEFFT DCW *          COEFFICIENT                        6787    DCW        #233
07635  2 AGE    DCW *                                             6789    DCW        #233
07640 25 MESAG1 DCW *          X VARIABLE IS LOG T.L              6814    DCW        #233
07645 25 MESAG2 DCW *          Y VARIABLE IS LOG WEIGHT           6839    DCW        #234
07650 27 MESAG3 DCW *          LOGW EQUALS LOGC PLUS NLOGL        6866    DCW        #235
07655  5 ALPHA  DCW *          ALPHA                              6871    DCW        #235
07660  4 BETA   DCW *          BETA                               6875    DCW        #235
07665 11 SCLRAD DCW *          SCALE RAD                          6886    DCW        #236
07670 11 TOTLEN DCW *          TOT LENGTH                         6897    DCW        #236
07675 27 MESAG4 DCW *          Y EQUALS ALPHA PLUS BETA X         6924    DCW        #237
07680 11 STDLEN DCW *          STD LENGTH                         6935    DCW        #237
07685 11 FRKLEN DCW *          FORK LENGTH                        6946    DCW        #238
07690  5 MALE   DCW *          MALE                               6951    DCW        #238
07695  5 FEM    DCW *          FEM                                6956    DCW        #238
07700  5 UNSEX  DCW *          UNSEX                              6961    DCW        #238
07705  1 A      DCW *          A                                  6962    DCW        #238
07710  1 B      DCW *          B                                  6963    DCW        #238
07715  3 EDTWDB DCW *          .                                  6966    DCW        #238
07720  4 EDTWDC DCW *          .                                  6970    DCW        #238
07725  5 EDTWDD DCW *          .                                  6975    DCW        #239
07730  6 EDTWDE DCW *          .                                  6981    DCW        #239
07735  4 EDTWD1 DCW *           .                                 6985    DCW        #239
07740  5 EDTWD2 DCW *           0.                               6990    DCW        #239
07745 12 EDTWD3 DCW *                  0.                        7002    DCW        #239
07750 12 EDTWD4 DCW *              0.                            7014    DCW        #240
07755 10 EDTWD5 DCW *            0.     -                        7024    DCW        #240
07760 10 EDTWD6 DCW *              0.   -                        7034    DCW        #240
07765 11 EDTWD7 DCW *                   0                        7045    DCW        #241
```

```
07770  1 ZEROS1 DCW *          0                          7046    DCW          #241
07775  3 KLENG  DCW *                                     7049    DCW          #241
07780  4 KWEIGT DCW *                                     7053    DCW          #241
07785  3 CONDIT DCW *                                     7056    DCW          #241
07790  6 TEMPO6 DCW *                                     7062    DCW          #241
07795  1 ZEROX  DCW *         ¢¢                          7063    DCW          #241
07800  4 SCALER DCW *                                     7067    DCW          #241
07805 19 ZERO19 DCW *          0000000000000000000       7086    DCW          #242
07810 31 MAREA2 DCW *                                     7117    DCW          #243
07815 23 MAREA3 DCW *                                     7140    DCW          #244
07820 20 TEMPA  DCW *                                     7160    DCW          #245
07825 20 TEMPB  DCW *                                     7180    DCW          #245
07830 45 DIVIS3 DS  *                                             DS   B2V
07835  2        DC  *                                     7227    DC           #246
07840 20 TEMPC  DCW *                                     7247    DCW          #246
07845  3 RGLOGL DCW *                                     7250    DCW          #246
07850  3 RGLOGW DCW *                                     7253    DCW          #246
07855 11 LSX    DCW 0345                                  0345    DCW          #247
07860 11 WSY    DCW 0356                                  0356    DCW          #247
07865 11 LSX2   DCW 0367                                  0367    DCW          #247
07870 11 WSY2   DCW 0378                                  0378    DCW          #248
07875 11 LWSXY  DCW 0389                                  0389    DCW          #248
07880 11 NLW    DCW 0400                                  0400    DCW          #248
07885  8 LOGC   DCW 0606                                  0606    DCW          #249
07890  8        DCW 0614                                  0614    DCW          #249
07895  8        DCW 0622                                  0622    DCW          #249
07900  8        DCW 0630                                  0630    DCW          #249
07905  8 N      DCW 0638                                  0638    DCW          #249
07910  8        DCW 0646                                  0646    DCW          #250
07915  8        DCW 0654                                  0654    DCW          #250
07920  8        DCW 0662                                  0662    DCW          #250
07925  8 R      DCW 0670                                  0670    DCW          #250
07930  8        DCW 0678                                  0678    DCW          #250
```

```
07935  8          DCW 0686                                    0686    DCW          #251
07940  8          DCW 0694                                    0694    DCW          #251
07945 11 LSXA     DCW 0705                                    0705    DCW          #251
07950 11 SSYA     DCW 0716                                    0716    DCW          #251
07955 11 LSX2A    DCW 0727                                    0727    DCW          #252
07960 11 SSY2A    DCW 0738                                    0738    DCW          #252
07965 11 LSSXYA   DCW 0749                                    0749    DCW          #252
07970 11 NLSA     DCW 0760                                    0760    DCW          #253
07975  8 ALFAA    DCW 0966                                    0966    DCW          #254
07980  8          DCW 0974                                    0974    DCW          #254
07985  8          DCW 0982                                    0982    DCW          #254
07990  8          DCW 0990                                    0990    DCW          #254
07995  8 BETAA    DCW 0998                                    0998    DCW          #254
08000  8          DCW 1006                                    1006    DCW          #255
08005  8          DCW 1014                                    1014    DCW          #255
08010  8          DCW 1022                                    1022    DCW          #255
08015  8 RA       DCW 1030                                    1030    DCW          #255
08020  8          DCW 1038                                    1038    DCW          #255
08025  8          DCW 1046                                    1046    DCW          #256
08030  8          DCW 1054                                    1054    DCW          #256
08035 11 LSXB     DCW 1065                                    1065    DCW          #256
08040 11 LSYB     DCW 1076                                    1076    DCW          #256
08045 11 LSX2B    DCW 1087                                    1087    DCW          #257
08050 11 LSY2B    DCW 1098                                    1098    DCW          #257
08055 11 LLSXYB   DCW 1109                                    1109    DCW          #257
08060 11 NLLB     DCW 1120                                    1120    DCW          #258
08065  8 ALFAB    DCW 1326                                    1326    DCW          #259
08070  8          DCW 1334                                    1334    DCW          #259
08075  8          DCW 1342                                    1342    DCW          #259
08080  8          DCW 1350                                    1350    DCW          #259
08085  8 BETAB    DCW 1358                                    1358    DCW          #259
08090  8          DCW 1366                                    1366    DCW          #260
08095  8          DCW 1374                                    1374    DCW          #260
```

```
08100  8         DCW 1382                                  1382    DCW        #260
08105  8 RB      DCW 1390                                  1390    DCW        #260
08110  8         DCW 1398                                  1398    DCW        #260
08115  8         DCW 1406                                  1406    DCW        #261
08120  8         DCW 1414                                  1414    DCW        #261
08125  4 NUMBER  DCW *                                     7257    DCW        #262
08130  4 K10     DCW *          0010                       7261    DCW        #262
08135  4 K100    DCW *          0100                       7265    DCW        #262
08140  4 K1000   DCW *          1000                       7269    DCW        #262
08145  1 CHARIS  DCW *                                     7270    DCW        #262
08150  7 NEWNUM  DCW *                                     7277    DCW        #262
08155  1 ONE     DCW *          1                          7278    DCW        #262
08160  1 TWO     DCW *          2                          7279    DCW        #262
08165  1 THREE   DCW *          3                          7280    DCW        #263
08170  6 CONSTA  DCW *          316228                     7286    DCW        #263
08175  6 CONSTB  DCW *          632456                     7292    DCW        #263
08180  3 C1      DCW *          001                     **7295    DCW        #263
08185  3 C2      DCW *          002                      *7298    DCW        #263
08190  3 C3      DCW *          003                      *7301    DCW        #263
08195  3 C4      DCW *          004                      L7304    DCW        #263
08200  3 C5      DCW *          005                      I7307    DCW        #263
08205  3 C6      DCW *          006                      N7310    DCW        #264
08210  3 C7      DCW *          007                      K7313    DCW        #264
08215  3 C8      DCW *          008                      E7316    DCW        #264
08220  3 C9      DCW *          009                      D7319    DCW        #264
08225  3 C10     DCW *          010                      *7322    DCW        #264
08230  3 C11A    DCW *          011                      *7325    DCW        #264
08235  3 C12     DCW *          012                      *7328    DCW        #264
08240  3 C13     DCW *          013                     **7331    DCW        #264
08245  1 ZEROY   DCW *         --                          7332    DCW        #265
08250  1 ZONES   DCW *                                     7333    DCW        #265
08255  1 ZONEO   DCW *          Z                          7334    DCW        #265
08260  1 ZONE11  DCW *          -                          7335    DCW        #265
```

```
08265  1 GMWM   DCW 0081                                  0081   DCW      #266
08270  3 COUNT1 DCW *                                     7338   DCW      #267
08275  3 C320   DCW *          320                        7341   DCW      #267
08280  3 C66    DCW *          066                        7344   DCW      #267
08285  3 C720   DCW *          720                        7347   DCW      #267
08290  3 C392   DCW *          392                        7350   DCW      #267
08295  3 C752   DCW *          752                        7353   DCW      #267
08300  3 C360   DCW *          360                        7356   DCW      #267
08305  3 C20    DCW *          020                        7359   DCW      #267
08310  3 C80    DCW *          080                        7362   DCW      #268
08315  5 FACTOR DCW *                                     7367   DCW      #268
08320  5 CONSTC DCW *          50000                      7372   DCW      #268
08325  5 ADDUP  DCW *                                     7377   DCW      #268
08330  5 CONSTD DCW *          86304                      7382   DCW      #268
08335  5 CONSTE DCW *          36415                      7387   DCW      #268
08340 11 MAREA1 DCW *                                     7398   DCW      #268
08345  6 LOGISM DCW *                                     7404   DCW      #269
08350  5 HOLDIT DCW *                                     7409   DCW      #269
08355  5 CUBIC  DCW *                                     7414   DCW      #269
08360 11 BLANKY DCW *                                     7425   DCW      #269
08365  3 C32    DCW *          032                        7428   DCW      #269
08370  8 ALFAT  DCW *                                     7436   DCW      #269
08375  8 ALFAM  DCW *                                     7444   DCW      #270
08380  8 ALFAF  DCW *                                     7452   DCW      #270
08385  8 ALFAU  DCW *                                     7460   DCW      #270
08390  1 READ   DCW *          R                          7461   DCW      #270
08395  1 WRITE  DCW *          W                          7462   DCW      #270
08400  1 TL100T DC  0342                                  0342   DC       #271
08405  1 TL100M DC  0422                                  0422   DC       #272
08410  1 TL100F DC  0502                                  0502   DC       #273
08415  1 TL100U DC  0582                                  0582   DC       #274
08420  1 NO100T DC  0658                                  0658   DC       #275
08425  1 NO100M DC  0698                                  0698   DC       #276
```

```
08430  1 NO100F DC  0738                                    0738   DC     #277
08435  1 NO100U DC  0778                                    0778   DC     #278
08440  3 C16    DCW 0105        016                         0105   DCW    #279
08445  3 C24    DCW 0108        024                         0108   DCW    #279
08450  3 C28    DCW 0111        028                         0111   DCW    #279
08455  3 C36    DCW 0114        036                         0114   DCW    #279
08460  3 C40    DCW 0117        040                         0117   DCW    #279
08465  3 C48    DCW 0120        048                         0120   DCW    #279
08470  3 C56    DCW 0123        056                         0123   DCW    #279
08475  3 C64    DCW 0126        064                         0126   DCW    #279
08480  3 C72    DCW 0129        072                         0129   DCW    #280
08485  7 LENG1  DCW 0136        001-100                  **  0136   DCW    #280
08490  7 LENG2  DCW 0143        101-200                  *   0143   DCW    #280
08495  7 LENG3  DCW 0150        201-300                  L   0150   DCW    #280
08500  7 LENG4  DCW 0157        301-400                  I   0157   DCW    #280
08505  7 LENG5  DCW 0164        401-500                  N   0164   DCW    #280
08510  7 LENG6  DCW 0171        501-600                  K   0171   DCW    #281
08515  7 LENG7  DCW 0178        601-700                  E   0178   DCW    #281
08520  7 LENG8  DCW 0185        701-800                  D   0185   DCW    #281
08525  7 LENG9  DCW 0192        801-900                  *   0192   DCW    #281
08530  7 LENG10 DCW 0199        901-999                  **  0199   DCW    #281
08535  3 C101   DCW *           101                         7465   DCW    #282
08540  3 C200   DCW *           200                         7468   DCW    #282
08545  3 C300   DCW *           300                         7471   DCW    #282
08550  3 C400   DCW *           400                         7474   DCW    #282
08555  3 C500   DCW *           500                         7477   DCW    #282
08560  3 C600   DCW *           600                         7480   DCW    #282
08565  3 C700   DCW *           700                         7483   DCW    #282
08570  3 C800   DCW *           800                         7486   DCW    #282
08575  3 C900   DCW *           900                         7489   DCW    #283
08580  8 TABLE8 DCW *           TABLE 8                     7497   DCW    #283
08585  4 MEAN   DCW *           MEAN                        7501   DCW    #283
08590  4 FISH   DCW *           FISH                        7505   DCW    #283
```

```
08595  3 C160A  DCW *          160
08600  3 C156   DCW *          156
08605  3 C312   DCW *          312
08610  7 LENGA  DCW *          001-050
08615  7 LENGB  DCW *          051-100
08620  7 LENGC  DCW *          101-150
08625  7 LENGD  DCW *          151-200
08630  7 LENGE  DCW *          201-250
08635  7 LENGF  DCW *          251-300
08640  7 LENGG  DCW *          301-350
08645  7 LENGH  DCW *          351-400
08650  7 LENGI  DCW *          401-450
08655  7 LENGJ  DCW *          451-500
08660  7 LENGK  DCW *          001-025
08665  7 LENGL  DCW *          026-050
08670  7 LENGM  DCW *          051-075
08675  7 LENGN  DCW *          076-100
08680  7 LENGC  DCW *          101-125
08685  7 LENGP  DCW *          126-150
08690  7 LENGQ  DCW *          151-175
08695  7 LENGR  DCW *          176-200
08700  7 LENGS  DCW *          201-225
08705  7 LENGT  DCW *          226-250
08710  3 C51    DCW *          051
08715  3 C100   DCW *          100
08720  3 C150   DCW *          150
08725  3 C250   DCW *          250
08730  3 C350   DCW *          350
08735  3 C450   DCW *          450
08740  3 C26    DCW *          026
08745  3 C50    DCW *          050
08750  3 C75    DCW *          075
08755  3 C125   DCW *          125
```

PAGE# 54

```
      7508   DCW      #283
      7511   DCW      #283
      7514   DCW      #283
   **7521   DCW      #283
    *7528   DCW      #284
    L7535   DCW      #284
    I7542   DCW      #284
    N7549   DCW      #284
    K7556   DCW      #284
    E7563   DCW      #285
    D7570   DCW      #285
    *7577   DCW      #285
   **7584   DCW      #285
   **7591   DCW      #285
    *7598   DCW      #286
    L7605   DCW      #286
    I7612   DCW      #286
    N7619   DCW      #286
    K7626   DCW      #286
    E7633   DCW      #287
    D7640   DCW      #287
    *7647   DCW      #287
   **7654   DCW      #287
      7657   DCW      #287
      7660   DCW      #287
      7663   DCW      #287
      7666   DCW      #287
      7669   DCW      #288
      7672   DCW      #288
      7675   DCW      #288
      7678   DCW      #288
      7681   DCW      #288
      7684   DCW      #288
```

```
08760  3 C175    DCW *          175                          7687    DCW        #288
08765  3 C225    DCW *          225                          7690    DCW        #288
08770  3 C416    DCW *          416                          7693    DCW        #289
08775  1 AGE1T   DC  0822                                    0822    DC         #290
08780  1 AGE1M   DCW 0926                                    0926    DCW        #291
08785  1 AGE1F   DC  1030                                    1030    DC         #292
08790  1 AGE1U   DC  1134                                    1134    DC         #293
08795  1 NAGE1T  DC  1234                                    1234    DC         #294
08800  1 NAGE1M  DCW 1286                                    1286    DCW        #295
08805  1 NAGE1F  DC  1338                                    1338    DC         #296
08810  1 NAGE1U  DC  1390                                    1390    DC         #297
08815  3 C52     DCW *          052                          7696    DCW        #298
08820  3 C104    DCW *          104                          7699    DCW        #298
08825  3 C208A   DCW *          208                          7702    DCW        #298
08830  3 C204    DCW *          204                          7705    DCW        #298
08835  3 C408    DCW *          408                          7708    DCW        #298
08840  8 TABLE9  DCW *          TABLE 9                      7716    DCW        #298
08845  1 NOP     DCW *          N                            7717    DCW        #298
08850  1 MCS     DCW *          Z                            7718    DCW        #298
08855  9 TABL10  DCW *          TABLE 10                     7727    DCW        #299
08860  3 SCL     DCW *          SCL                          7730    DCW        #299
08865  3 MAG     DCW *          MAG                          7733    DCW        #299
08870  9 WORKER  DCW *                                      7742    DCW        #299
08875  3 CAGE    DCW *                                      7745    DCW        #299
08880  2 KCNS1   DCW *          00                        **7747    DCW        #299
08885  2         DCW *          01                         *7749    DCW        #299
08890  2         DCW *          03                         *7751    DCW        #299
08895  2         DCW *          06                         L7753    DCW        #300
08900  2         DCW *          10                         I7755    DCW        #300
08905  2         DCW *          15                         N7757    DCW        #300
08910  2         DCW *          21                         K7759    DCW        #300
08915  2         DCW *          28                         E7761    DCW        #300
08920  2         DCW *          36                         D7763    DCW        #300
```

```
08925  2          DCW *          45                                  *  7765    DCW          #300
08930  2          DCW *          55                                  *  7767    DCW          #300
08935  2          DCW *          66                                 **  7769    DCW          #301
08940  1 TAGE1    DC  0342                                              0342    DC           #302
08945  1 NTAGE1   DCW 1154                                              1154    DCW          #303
08950  1 TLAGE1   DC  0966                                              0966    DC           #304
08955  1 NLAGE1   DC  1466                                              1466    DC           #305
08960  1 CLAGE1   DC  1062                                              1062    DC           #306
08965  1 NCAGE1   DC  1514                                              1514    DC           #307
08970  9 TABL11   DCW *          TABLE 11                              7778    DCW          #308
08975 26 MCALEN   DCW *          MEAN CALCULATED T.L AT AGE            7804    DCW          #308
08980  3 C6A      DCW *          006                                   7807    DCW          #308
08985  3 C78      DCW *          078                                   7810    DCW          #308
08990  9 TABL12   DCW *          TABLE 12                              7819    DCW          #309
08995  9 TABL13   DCW *          TABLE 13                              7828    DCW          #309
09000  9 TABL14   DCW *          TABLE 14                              7837    DCW          #309
09005  1 SWITCH   DCW *                                                7838    DCW          #309
09010 17 TSENSE   DCW *          SENSE SWITCHES ON                     7855    DCW          #310
09015  1 C        DCW *          C                                     7856    DCW          #310
09020  1 D        DCW *          D                                     7857    DCW          #310
09025  1 E        DCW *          E                                     7858    DCW          #310
09030  1 F        DCW *          F                                     7859    DCW          #310
09035  1 G        DCW *          G                                     7860    DCW          #310
09040  7 SENSES   DCW *          A                                     7867    DCW          #310
09045  1 SBR      DCW *          H                                     7868    DCW          #310
09050  7 ERROR1   H   0001       0001                                  7869  . 001 001      #311
09055  7 ERROR2   H   0002       0002                                  7876  . 002 002      #311
09060  7 ERROR3   H   0003       0003                                  7883  . 003 003      #311
09065  7 ERROR4   H   0004       0004                                  7890  . 004 004      #311
09070  7 ERROR5   H   0005       0005                                  7897  . 005 005      #311
09075  7 ERROR6   H   0006       0006                                  7904  . 006 006      #312
09080
09085
```

```
09090          END START                                    / V15 080     #313
                          1816 -CARDS
                           481 -SYMBOLS
```

PAGE# 58

ALPHA SYMBOL TABLE # 1

	A	6962
	ADDUP	7377
	AGE	6789
	AGE1F	1030
	AGE1M	0926
	AGE1T	0822
	AGE1U	1134
	ALFAA	0966
	ALFAB	1326
	ALFAF	7452
	ALFAM	7444
	ALFAT	7436
	ALFAU	7460
	ALPHA	6871
	ALT7A	5157
	ALT7B	5227
	B	6963
	BETA	6875
	BETAA	0998
	BETAB	1358
	BLANKY	7425
*	B098	1637
	B099	1652
	B100	1667
	B101	1723
	B102	1743
	B103	1768
	B104	1779
	B105	1797
	B110	1832

PAGE# 59

ALPHA SYMBOL TABLE # 2

	B112	1843
	B114	1854
	B120	1861
	B130	2028
	B140	2072
	B150	2116
	B160	2160
	B200	2183
	B210	2197
	B300	2243
	B310	2305
	B400	2351
	B410	2388
	B500	2434
	B510	2596
*	B520	2642
	B522	2775
	B523	2782
	B525	2810
*	B600	2842
	B610	2857
*	B620	2890
	B625	2894
*	B630	2931
	B699	1630
	B700	1640
	B705	1761
	B706	1789
*	B707	1811
	B708	1818

PAGE# 60

ALPHA SYMBOL TABLE # 3

*	B709	1825
	B710	1832
*	B712	1847
	B713	1854
*	B714	1861
	B715	1868
	B720	1883
	B750	2071
	B800	2108
	B801	2137
	B802	2187
	B805	2233
	B806	2268
	B807	2293
	B808	2318
	B809	2339
	B810	2402
	B811	2494
	B812	2388
	B813	2508
	B820	2594
	B830	2602
	B840	2649
	B850	2682
	B860	2715
	C	7856
	CAGE	7745
	CHARIS	7270
	CLAGE1	1062
	COEFFT	6787

PAGE# 61

ALPHA SYMBOL TABLE # 4

	CONDIT	7056
	CONSTA	7286
	CONSTB	7292
	CONSTC	7372
	CONSTD	7382
	CONSTE	7387
	CORLAT	6776
	COUNT1	7338
	CUBIC	7414
	C1	7295
	C10	7322
	C100	7660
	C101	7465
	C104	7699
	C11	1524
*	C11A	7325
	C12	7328
	C125	7684
*	C13	7331
	C150	7663
	C156	7511
	C16	0105
	C160A	7508
	C175	7687
	C198	1521
	C2	7298
	C20	7359
	C200	7468
	C204	7705
	C208A	7702

PAGE# 62

ALPHA SYMBOL TABLE # 5

C225	7690
C24	0108
C250	7666
C26	7675
C28	0111
C3	7301
C300	7471
C312	7514
C32	7428
C320	7341
C350	7669
C36	0114
C360	7356
C392	7350
C4	7304
C40	0117
C400	7474
C408	7708
C416	7693
C450	7672
C48	0120
C5	7307
C50	7678
C500	7477
C51	7657
C52	7696
C56	0123
C6	7310
C6A	7807
C600	7480

PAGE# 63

ALPHA SYMBOL TABLE # 6

	C64	0126
	C66	7344
	C7	7313
	C700	7483
	C72	0129
	C720	7347
	C75	7681
	C752	7353
	C78	7810
	C8	7316
	C80	7362
	C800	7486
*	C9	7319
	C900	7489
	D	7857
	DIVIS3	7225
	E	7858
	EDTWDB	6966
	EDTWDC	6970
	EDTWDD	6975
	EDTWDE	6981
	EDTWD1	6985
	EDTWD2	6990
	EDTWD3	7002
	EDTWD4	7014
	EDTWD5	7024
	EDTWD6	7034
	EDTWD7	7045
	ERROR1	7869
	ERROR2	7876

PAGE# 64

ALPHA SYMBOL TABLE # 7

ERROR3	7883
ERROR4	7890
ERROR5	7897
ERROR6	7904
ETAPEW	6495
EXIT	3116
EXIT2T	2820
EXIT2U	2905
EXIT2V	6044
EXIT2W	6281
EXIT2X	3303
EXIT2Y	3385
EXIT3	3565
EXIT3A	4236
EXIT3B	3684
EXIT3X	6518
EXIT3Y	4251
EXIT3Z	4268
EXIT4	6367
EXIT5	4647
EXIT6	4781
EXIT6A	4915
EXIT6B	5049
EXIT7	5807
EXIT8	3257
EXIT8T	3531
EXIT8U	3769
EXIT8V	3952
EXIT8W	4414
EXIT8X	6593

PAGE# 65

ALPHA SYMBOL TABLE # 8

	EXIT8Y	4466
	EXIT9	4510
	EXOLAY	4516
	F	7859
	F.L	6669
	FACTOR	7367
	FEM	6956
	FEMALE	6703
	FISH	7505
	FORK	6629
	FRKLEN	6946
	G	7860
*	GMWM	0081
	HOLDIT	7409
	HY5	3204
	INIT	1515
	INITA	1525
	INITB	1555
	INITC	1585
	KFL	6647
	KLENG	7049
	KONS1	7747
	KSL	6644
	KTL	6641
	KWEIGT	7053
	KZTEN	3254
	K10	7261
	K100	7265
	K1000	7269
	LENGA	7521

PAGE# 66

ALPHA SYMBOL TABLE # 9

*	LENGB	7528
*	LENGC	7535
*	LENGD	7542
*	LENGE	7549
*	LENGF	7556
*	LENGG	7563
*	LENGH	7570
*	LENGI	7577
*	LENGJ	7584
	LENGK	7591
*	LENGL	7598
*	LENGM	7605
*	LENGN	7612
*	LENGO	7619
*	LENGP	7626
*	LENGQ	7633
*	LENGR	7640
*	LENGS	7647
*	LENGT	7654
	LENGTH	6660
	LENG1	0136
*	LENG10	0199
*	LENG2	0143
*	LENG3	0150
*	LENG4	0157
*	LENG5	0164
*	LENG6	0171
*	LENG7	0178
*	LENG8	0185
*	LENG9	0192

PAGE# 67

ALPHA SYMBOL TABLE #10

LLSXYB	1109
LOG	6638
LOGC	0606
LOGISM	7404
LSSXYA	0749
LSX	0345
LSXA	0705
LSXB	1065
LSX2	0367
LSX2A	0727
LSX2B	1087
LSYB	1076
LSY2B	1098
LUPSR	2979
LWSXY	0389
MAG	7733
MALE	6951
MAREA1	7398
MAREA2	7117
MAREA3	7140
MCALEN	7804
MCS	7718
MEAN	7501
MESAG1	6814
MESAG2	6839
MESAG3	6866
MESAG4	6924
N	0638
NAGE1F	1338
NAGE1M	1286

PAGE# 68

ALPHA SYMBOL TABLE #11

NAGE1T	1234
NAGE1U	1390
NCAGE1	1514
NEWNUM	7277
NLAGE1	1466
NLLB	1120
NLSA	0760
NLW	0400
NO	6654
NOFISH	6756
NOP	7717
NO100F	0738
NO100M	0698
NO100T	0658
NO100U	0778
NTAGE1	1154
NUMBER	7257
OLAY	1559
OLAYA	1581
OLAYB	1609
ONE	7278
OTAPEW	6488
OUT	3130
R	0670
RA	1030
RAD	3163
RADIUS	6673
RB	1390
READ	7461
RGLOGL	7250

PAGE# 69

ALPHA SYMBOL TABLE #12

	RGLOGW	7253
	ROOT	3244
	S.L	6666
	SBR	7868
	SCALE	6652
	SCALER	7067
	SCL	7730
	SCLRAD	6886
	SENSES	7867
	SEX	6611
*	SIZEA	5520
	SIZEB	5598
	SIZEC	5676
	SIZED	5754
	SPEC	6608
	SQRUT	2935
	SSYA	0716
	SSY2A	0738
	STAND	6624
	START	1515
	STDLEN	6935
	SUB2T	2739
	SUB2U	2824
	SUB2V	5811
	SUB2VA	5898
	SUB2W	6048
	SUB2WA	6135
	SUB2X	3255
	SUB2Y	3307
	SUB3	3389

PAGE# 70

ALPHA SYMBOL TABLE #13

	SUB3A	3569
*	SUB3AA	3628
	SUB3AB	3635
	SUB3AC	3698
	SUB3AD	3761
	SUB3AE	3824
	SUB3AF	3887
	SUB3AG	3998
	SUB3AH	4063
	SUB3AI	4140
	SUB3AJ	3952
	SUB3B	3535
	SUB3BA	3640
	SUB3X	6499
	SUB3Y	4240
	SUB3Z	4255
	SUB4	6285
	SUB5	4272
	SUB5A	4323
	SUB5B	4341
	SUB5C	4359
	SUB5D	4377
	SUB5E	4428
	SUB5N	4421
	SUB5X	4395
	SUB6	4651
	SUB6A	4785
	SUB6B	4919
	SUB7	5053
	SUB8	2909

PAGE# 71

ALPHA SYMBOL TABLE #14

	SUB8A	2975
	SUB8B	3027
	SUB8C	3074
	SUB8D	3081
	SUB8E	3150
	SUB8F	3188
	SUB8G	3253
	SUB8T	3261
	SUB8T0	3517
	SUB8T3	3307
	SUB8T4	3337
	SUB8T5	3367
	SUB8T6	3397
	SUB8T7	3427
	SUB8T8	3457
	SUB8T9	3487
	SUB8U	3688
	SUB8V	3773
	SUB8W	3956
	SUB8WA	4037
	SUB8WB	4081
	SUB8WC	4310
	SUB8WD	4205
	SUB8WE	4150
	SUB8WF	4365
	SUB8X	6522
	SUB8XA	6526
*	SUB8XB	6539
	SUB8XC	6565
	SUB8Y	4418

PAGE# 72

ALPHA SYMBOL TABLE #15

SUB9	4470
SUMX	6711
SUMXX	6728
SUMXY	6746
SUMY	6719
SUMYY	6737
SWITCH	7838
T.L	6663
TABLE4	6604
TABLE5	6681
TABLE6	6689
TABLE7	6697
TABLE8	7497
TABLE9	7716
TABL10	7727
TABL11	7778
TABL12	7819
TABL13	7828
TABL14	7837
TAGE	6614
TAGE1	0342
TAPER	6371
TAPEW	6400
TAPEWA	6425
TAPEWB	6442
TAPEWC	6470
TEMPA	7160
TEMPB	7180
TEMPC	7247
TEMPO6	7062

PAGE# 73

ALPHA SYMBOL TABLE #16

TEMPX	3234
TEMPY	3214
TEMPZ	3224
THREE	7280
TLAGE1	0966
TLOGC	6761
TL100F	0502
TL100M	0422
TL100T	0342
TL100U	0582
TN	6765
TOTAL	6619
TOTLEN	6897
TR2	3134
TSENSE	7855
TWO	7279
UNSEX	6961
WEIGHT	6635
WKR	3194
WORKER	7742
WRITE	7462
WSY	0356
WSY2	0378
ZEROS1	7046
ZEROX	7063
ZEROY	7332
ZERO19	7086
ZONE	3153
ZONES	7333
ZONE0	7334
ZONE11	7335

ROOM USE ONLY

1966