ABSTRACT

AN ETHNOGRAPHIC DESCRIPTION OF
SANLEI TS'UN, TAIWAN
WITH EMPHASIS ON WOMEN'S ROLES

OVERCOMING RESEARCH PROBLEMS
CAUSED BY THE PRESENCE OF
A GREAT TRADITION

By

William Kester Barnett

Evidence from a 1965-67 field study conducted in a rural Taiwanese village suggested that the structural position of women was not inferior to men to the extent described in most previous reports or the literature of the Great Tradition of China. A detailed statement of the discrepancies, reasons for their occurrence, and suggestions for reducing misinterpretations in the future are provided.

The largest portion of the four logical divisions of this report contains a typical ethnography of a Hokkien village in the rice-tea-orange region of northern Taiwan, based on nineteen months of field work employing standard anthropological techniques such as participant-observation, mapping, census, life histories, and open-ended interview schedules.

The second portion contrasts the canons of the Great Tradition which contend Chinese women were expected to be uneducated, economically useless, subordinate, submissive, obedient, reticent, passive, and timid, with research data from Sanlei Ts'un where many women were educated, most were

economically important, and several were family despots. Other Chinese ethnographies indicate that Sanlei is not deviant for each contains considerable data which support the latter description despite the fact the data is in conflict with the author's summary regarding female status. A few sources explicitly claim the case for the lowly position of women in China has been overstated.

The third portion establishes how the errors in interpretation come about. One primary cause relates to the frequent anthropological emphasis on persisting aspects of social structure with a corresponding, but not necessary, focus on "ideal" rather than "real" culture; but more important, the presence of a Great Tradition which is expressed in a literary record generates problems for valid anthropological research in high civilizations. Indigenous scholars and foreign anthropologists alike become steeped in the "ideal" culture described by a society's Great Tradition before commencing field work. According to cognitive dissonance theory, it is extremely difficult to overcome any belief once it becomes internalized, i.e., any evidence contrary to existing knowledge tends to be ignored or denied. Therefore, both evidence and conclusions derived from research in civilizations by "specialists" probably will be unconsciously biased in favor of the Great Tradition.

The last major section is devoted to four suggestions for preventing further misinterpretations. The first supports added attention to concrete enumeration of rates

and cases as part of the increased attention to research methodology and reduced reliance on impressions.

The second advocates increased employment of the processural approach featuring extended case studies which place other analysts one step nearer to the social facts than conventional approachese, i.e., at the level of reading observational reports rather than abstractions.

The third and fourth proposals are two sides of the same coin. In order to maintain traditional anthropological objectivity which was customarily partially based on cross-cultural research, and yet, in order to obtain the advantages accruing from specialization in a Great Tradition, specialists should be encouraged to punctuate field activities in their special civilization by entering a third culture for comparative purposes, and conversely, other ethnographers should be encouraged to conduct research in high civilizations outside their areas of expertise. Specialization in a single society is probably dysfunctional for anthropology as presently practiced.

Nevertheless, undue pessimism is not fully warranted as demonstrated by several breakthroughs with new interpretations of Chinese cultural materials despite their conflicts with ideals expressed in the Great Tradition, i.e., in family composition, importance of affinal relations, nature of lineage organizations, etc. Further research is expected to support the contention that the status of women in China is not actually as low as was commonly accepted.

AN ETHNOGRAPHIC DESCRIPTION OF SANLEI TS'UN, TAIWAN WITH EMPHASIS ON WOMEN'S ROLES

OVERCOMING RESEARCH PROBLEMS CAUSED BY THE PRESENCE OF A GREAT TRADITION

By

William Kester Barnett

A THESIS

Submitted to
Michigan State University
in partial fulfillment of the requirements
for the degree of

DOCTOR OF PHILOSOPHY

Department of Anthropology

1970

To Nancy,

Beth and Sidney

ACKNOWLEDGEMENTS

This study is based on field work conducted in the Republic of China (Taiwan) between September, 1965, and January, 1967. The generous financial support for travel, subsistence, and research expenses was realized from the following sources: National Science Foundation Cooperative Fellowship, Michigan State University Asian Studies Center, National Defense Education Act Loan, and an International Development Fellowship, Institute of Advanced Projects, Center for Cultural and Technical Interchange Between East and West. The latter also provided six months in residence to organize field notes, review library materials, and consult with visiting and resident scholars. Finally, the period spent in writing after my return was partially supported by a National Science Foundation Graduate Fellowship. My appreciation is considerable for it simply would not have been possible to accomplish the research without this aid.

The field work was facilitated by the hearty cooperation of many people in Taiwan. Although operating under the constraints of the "period of rebellion," pertinent data was provided whenever consistant with the security of the country. Officials in such Hsin Tien offices as those of the mayor, clerk, council, farmers' association, police, and land all made us welcome. Scholars at National Taiwan University

often provided intellectual stimulation. The late Professor Chen Shao-hsing, a sociologist, and Professor Chen Chi-lu, an anthropologist, graciously served as our sponsors. Professors Shih Chien-sheng, Dean of the Law School, National Taiwan University, and Mei Ke-wang of the Central Police College furnished many helpful introductions. Much valuable data derived from the Joint Commission on Rural Reconstruction and the United States Information Service. Our major assistants, Jerry Lai, Jason Chi, and Pearl Hsieh must be commended. However, the greatest debt is due to the people who lived in the village I studied and in the other four villages which comprise the administrative unit in which it is located. They took us into their homes and into their hearts and made us a meaningful part of the community.

My professional training has been in the Departments of Anthropology and Sociology at Michigan State University. Those who were most influential in effecting my scholarly interests were Drs. John Donoghue, John Gullahorn, and Ralph Nicholas. Also generous with time and valuable advice were Drs. Moreau Maxwell and Iwao Ishino of the Department of Anthropology and Dr. William Ross, the Director of the Asian Studies Center.

Professor Bernard Gallin has expended a great deal of time and intellectual energy in suggesting improvements in this dissertation. Some of these suggestions have concerned matters of detail and some of them have concerned fundamental structural and organizational problems. In the time available to me, I have not been able to take account of all of

these suggestions although I believe that they would have made the thesis significantly better than it is now. I apologize to Professor Gallin and to readers for defects that could have been remedied if I had made the improvements that he suggested. I plan to make the recommended changes as portions of the dissertation are revised for publication.

Finally, I am greatly indebted to my family. My wife, Nancy McMillin Barnett, provided professional assistance as a fellow anthropology graduate student as well as incredible amounts of patience, encouragement, and understanding. My two children, Beth and Sidney, not only endured what might have been regarded as the relative hardship of life in a rural Taiwanese village, they thoroughly enjoyed it, made many friends of their own, and helped make our stay a most enjoyable one. My parents, Betty and Bill, and my mother-in-law, Mary, never deviated from a constant faith in my ability far beyond my own.

Please forgive the unfortunate errors of omission for my debt to so many is too great to be recognized or repaid other than indirectly, by a dedication to scholarship and service to others, in order to transmit the benefits to the next generation.

Iowa City, Iowa
May, 1970

WKB

TABLE OF CONTENTS

LIST OF TABLES

LIST OF FIGURES

LIST OF SYMBOLS

△	Male	○	Female
⃤	Deceased Male	∅	Deceased Female
=	Marriage	≠	Divorce
| ┬	Descent	¦	Adoption
[ ]	Departed via Migration or Adoption		
△=○	Adopted Daughter Marriage (Siaosiv)	△=○	Adopted-in Husband Marriage (Chao fu)

PREFACE

As is customary in anthropological reporting, fictitious names have been employed in order to protect the subjects from ready identification. Additionally, although the names of large cities and towns are correct, the names of all small communities including the subject village (*ts'un*) are disguised.

The subject village is one of five villages which are united to form a single *li*, a Chinese administrative unit for which there is no English equivalent. Roughly, it may be defined as the smallest political unit which possesses both an elected head and an elected representative to the next higher administrative level. For the sake of simplicity, Talei or Talei Li will be used to refer to this *li* although in proper Chinese, it would be Ta Lei Li (Big Fort Li).

In accordance with a common Chinese pattern, I have derived names of the five villages in Talei Li from the *li* name. The five villages are numbered in ascending order from north to south and the number is then combined with the second character of the *li* name to yield respective village names of T'oulei, Erhlei, Sanlei, Szulei, and Wulei. In proper Chinese, all five would match the pattern which is

indicated for the subject village of the study: San Lei Ts'un (Third Fort Village). Both Sanlei and Sanlei Ts'un are used interchangeably.

In addition, the names of all village residents are pseudonyms. Since each name represents a real person rather than a composite or statistical average, an assigned name is used consistently throughout the report with reference to any real named individual. Consequently, any material which might be considered injurious or which could prove embarrassing is not identified with any of the named individuals.

In accordance with several previous anthropological reports pertaining to Taiwan, Mandarin has been employed for all native terms romanized according to the Wade-Giles system. This was accomplished in spite of the fact that the normal mode of discourse in the subject village as in the majority of Taiwanese villages is in Min-nan Hwa (Taiwanese). Taiwanese terms for which there are no Mandarin equivalent are romanized according to the Douglas system. Three glossaries are provided: Glossary A consists of proper place names in Mandarin and characters. Since the names are in common use in literature and for postal addresses, no Taiwanese equivalent is provided. Glossary B consists of words and short phrases in Mandarin, Taiwanese, English, and characters arranged alphabetically according to the romanized Mandarin. Glossary C includes characters and English for the longer phrases and sentences.

Monetary amounts ordinarily express the local currency system which is often identified in the literature as N.T. (New Taiwanese). Thus, $1.00 signifies one New Taiwanese dollar. When it is necessary to list an American equivalent, "U.S." is suffixed to the figure. At the time of the study, $ 40.00 was equal to $ 1.00 (U.S.) at the official rate of exchange and the unofficial rate on the black market was nearly identical.

There are two units of measure commonly employed in rural Taiwan and which appear frequently in this account. The measure of the land area is the chia, equal to about 2.39 acres and the measure of weight is the chin, equal to about one and one-third pounds.

CHAPTER I

PROBLEM AND APPROACH

Overview of the Theoretical Problem

In a field study, I found that the actual role of women in contemporary rural Taiwanese society was significantly different from my expectations which were based on an analysis of the traditional literature.[1] In brief, the structural position of women was not inferior to the position of men to the degree expected. Although part of the differences between the observed and predicted patterns was due to socio-cultural change and regional variation, a significant portion is due to errors in abstraction by former reporters. The theoretical problem for this study is the delineation of the inconsistencies and an explanation of the reasons for the errors.

One of the foundations of the anthropological approach to research is involvement in a culture foreign to that of the investigator. This requirement is based on the belief that a minimum level of dissimilarity is necessary for both objectivity and awareness. That is, it is necessary that behavior be sufficiently different from that normally encountered by the investigator so that

assumptions about human nature are called into question. It will be demonstrated that this ideal approach is not realized in some kinds of societies.

In the early history of anthropology, most research focused on primitive or tribal groups. Commencing in the nineteen-thirties, anthropologists were led by Redfield (1930), Fei (1939), and Embree (1939) to the study of major civilizations, particularly peasant societies. As Geertz has written, "The peasant is an immemorial figure on the world social landscape but anthropology noticed him only recently" (1962:1). The interest in peasants gradually increased, particularly in the last twenty years. Foster argues that problems of peasantry now occupy the attention of more anthropologists than any other (1967a:2).

There is a qualitative difference between peasant societies and primitive societies which has not been sufficiently considered: the possession of a "Great Tradition" which is clearly expressed in a literary record. There has been some research with regard to the degree which the "Little Tradition" of a local community expresses the "Great Tradition" of the society in which it is embedded.[2] Yet, what is often seemingly overlooked is that the "Great Tradition" and the literary record usually concern only the elite classes in a society, the bearers of the "Great Tradition." The existence of a record of this

type has important implications for anthropological research.

An anthropologist prepares to study a great civilization by reading as much of its record as possible including the great novels, poetry, songs, history, philosophy, and the like. This is inevitably accomplished even though a small rural community research project is planned. It was suggested by implication in the above paragraph that the relationship between the "Great Tradition" expressed in this literature and the "Little Tradition" to be discovered in the village is problematical. It is possible that the study of the "Great Tradition" may create a bias in the observer which psychologists refer to as creation of a "psychological set." Kendler (1968:319-20), for example, argues that once the subject has internalized one set of concepts or responses, it is extremely difficult for him to learn to reverse his knowledge. In simple terms, it is implied that the investigator will discover exactly what he expects to discover. He may make good observations in the field. Nevertheless, his conclusions are likely to be consistent with the knowledge he derived from his preparations before going to the field. Two cases will illustrate this problem.

For the first, both the "Great Tradition" of China and the anthropological reports agree that the dominant residence pattern in China is patrilocal. A recent

description of a Taiwanese village concluded that its dominant residence pattern was patrilocal (Johnson, 1966). Dominant was employed in a statistical sense, i.e., most common. However, in the same paper, detailed data were provided describing each marriage. My computations which were solely based on the listed data revealed that 31% of the residences after marriage were patrilocal and 33%, neolocal. Therefore, the author's abstraction that patrilocal residence is dominant is not supported by his own data. This is not a deliberate falsification for it is highly probable that the villagers would also agree with the investigator's contention that most brides join their husbands at his father's house.

The second example is similar. At a meeting in Taipei, I heard a sociologist's description of a typical[3] Chinese wedding on Taiwan replete with the bride's red dress and sedan chair which closely matched traditional accounts. The use of the term typical implies that the described pattern was most frequent. In my own village, a Western-style white wedding gown rather than a red chi pao (tight-collared slit-sided Chinese dress) was usual and at the only wedding where the bride wore a red dress, my Chinese assistant was very excited by the fact that the bride was not wearing what he called the "traditional white gown." Therefore, after the paper was concluded I questioned the author informally. In his village, he had

observed fifteen weddings; two brides wore a red dress and thirteen, a white gown. He concluded that there were two typical weddings and thirteen exceptions. His summary is a good illustration of the argument--his data were good, furnished without hesitation in spite of the fact the data did not support his abstraction. His abstraction was consistent with the "Great Tradition" which I argue creates a personal bias difficult for the investigator to overcome. He, for example, displayed no anxiety when I confronted him with the fact that his "typical" wedding should reflect the white gown worn in 13 cases rather than the red dress worn in two.

The kind of preparation described above for study in a civilization contrasts significantly with that by an anthropologist planning a tribal study. He too reads all that is available but most of what he reads are observational reports rather than a body of indigenous literature. He probably still brings to his study his own biases for after all, "No man looks at the world with pristine eyes" (Benedict, 1935:4). However, the biases were derived from a cultural background distinct from the focus of the field study.

It is probable that the anthropologist interested in one of the great civilizations brings to the field not only the biases derived from his own culture but biases from the culture in which he plans to conduct research.

Also note that this second type of bias is derived from a subculture of the elite classes rather than from the peasant masses. It is probably significant that many anthropologists who study China are known as "Sinologists" but there is no equivalent term for those who study the Zuni or the Nuba.

However, once a bias derived from the "Great Tradition" is overcome and reported in the literature, other investigators soon discover the fact in their own research This does not imply that there is any falsification; rather, that once the importance of some social fact is drawn to the attention of the investigator, he looks at its implications for his own research. This latter belief is supported by the fact that when ethnographies written before its recognition are re-examined, they often provide support for the new discovery through concrete details although the original author may have reached the opposite conclusion.

Let me illustrate with the case of the Chinese family. Almost all early descriptions of the Chinese family emphasized its nature as a large extended family unit. In a demographic survey of 2,866 farm families in China, Buck revealed that most of the families were nuclear and smaller than previously suggested (1930). However, Buck's report did not have much effect on the literature until discovered and reported with further data by

F. L. K. Hsu in an article entitled "The Myth of Chinese Family Size" (1943). Subsequent to Hsu's article, almost every anthropologist-sinologist includes a section in any article about the Chinese family that echoes this discovery about the frequency of its small size (Lang, 1946; Lee, 1949; M. Levy, 1949; Gallin, 1966). However, one still finds many new articles on the Chinese family by others more removed from the mainstream of the sub-discipline which are either citing earlier literature or are citing quotes of quotes which still describe the Chinese family system as if the extended family were the norm. Before Hsu's article (1943), Fei had written (1939:27) that "the basic social group in the village is the chia, an expanded family." However, a careful examination of his data reveals that in his village the large family was rare. He calls it "curious" that "in less than ten percent of the total number of Chia [sic] do we find more than one married couple" (1939:28). In summary, Fei does furnish data which support the arguments for the high frequency of the small family size although he concludes the opposite.

For another illustration, consider the only recently realized importance of the role of affinal relatives in the Chinese kinship system first recognized by Gallin (1960). Gallin's report stressed their importance at the level of the peasant sector of the society as well as the elite. Affinal relatives in China, in spite of a

supposed overwhelming emphasis on patrilineality, have been "discovered" to be important in economic and political spheres as well as in such other spheres as marriage, funerals, education, certain birthdays, childbirth, etc. Subsequent reports take Gallin's discovery into account. For example, A. P. Wolf (1968) stressed the importance of the need to establish a network of affinal relations as one factor promoting traditional marriage forms in a Taiwanese peasant village.

As suggested previously, the re-examination of earlier reports also reveals clues to the importance of affinal relatives. The partnership which dominates Lin Yueh-hwa's study of Chinese familism (1947) consisted of a pair of affinal relatives. Although Fei placed great emphasis on agnates, he does indicate some significance for affinal extensions (1939:86-7). Finally, Freedman concludes (1957:225-31) that the kinship system in Singapore does not place an emphasis "on the groupings of people into agnatic groups" which is found in Fukien and Kwangtung. The importance of affinal relatives is one of the factors negating this expected emphasis. Because his conclusions which were based on observation are different than his expectations which were based on the literature, he considers Singapore to be deviant (1957:225). In the terms of the concept previously delineated, it may well be the case that if he were to make observations in Fukien and Kwangtung, he might also conclude that they too were

deviant from the model he furnishes for them, a model which he derived from the traditional literature.

I wish to strongly emphasize that careful analysis of earlier reports usually reveals support for each of these new discoveries in spite of the fact they were contrary to conventional literature and the "Great Tradition." It is discovered that the old data lends itself to a fresh interpretation in light of the new discovery. The original interpretation was incorrect or perhaps, neglected certain key aspects.

The above kinds of errors are now less likely to eventuate. Probably to a greater degree than ever before in the history of anthropology, there is an emphasis on science and a scientific approach. It is my belief that observations today include a greater amount of factual detail such as enumeration of examples than previously. Moreover, extended case studies provide detailed data previously available only to the original observer. There is correspondingly less emphasis on impressions. It is felt that this newer approach will help overcome the errors in previous ethnographies.

Attention is also being focused on research methodology. In a recent introduction to a work on methods, Epstein remarked on the "curious dearth of publications devoted specifically to the problems of fieldwork" (1967: vii). Malinowski has been held up as an excellent observer

worthy of emulation by most of my generation of anthropologists and those of one generation earlier. Yet, there are now second thoughts with regard to his reports. He was a romantic, reporting on what the society was like in the past and not on what he really observed. Where were the western soldiers, traders, trading posts, etc.? Mair (1969:135) claims that although Malinowski taught us "to look at society ' as a going concern,' what he described in the Trobriand Islands was 'the going concern' as it must have been just before a Colonial ruler began to interfere with it." A romantic ideal and glorification of the past has often been a part of anthropology. An indication of this previous emphasis may be found in the frequent use of the term the "ethnographic present" rather than the "past."

In this dissertation I plan to explore one of the kinds of error previously described. Given the current state of awareness about the small size of the Chinese family, it is time for a detailed re-examination of consequent differences in its internal roles and role relationships. By means of a community case study, I focus on the role of women in rural Chinese society and how the role differs from that reported in the traditional accounts. In addition to the particular case study, traditional literature will be re-examined for supporting evidence in spite of the original author's own abstractions and conclusions.

Finally, implications for anthropological research in great civilizations will be considered.

Discovery and Evolution of the Specific Problem

Before going to the field, I had no plan to focus on the role of women. I intended a standard descriptive ethnography with problem interests in culture change and the computer simulation of decision-making behavior. Since the specific concern with female roles appears to represent a radical change, I shall briefly discuss the development of my interest.

My preparations for field work were typical for anthropology students of Chinese society. They included an appropriate mastery of anthropological theory and methods plus a good background in anthropological sources pertaining to China. Additionally, I gained a basic familiarity with materials on China from other disciplines such as history, philosophy, literature, religion, and art. Although I attempted to approach the field in an open-minded manner, I had internalized a set of expectancies for behavior against which my observations could be compared. The observed behavior of women deviated most strikingly from what I expected.

The status of women in China is traditionally presented as structurally inferior to the status of men. The differences in status are not minor. In order to strengthen the case for the lowly position of women in China,

several sources (Lang, 1946:42; Bloodworth, 1966:71) echo the words of the third century B.C. poet Fu Husan (Waley, 1941:72), "How sad it is to be a woman! Nothing on earth is held so cheap." Parsons argues that female subordination is an adaptive structure, necessary for maintaining continuity in Chinese society (1951:196). In one of the most complete accounts of the position of women, based both on interviews and a thorough review of the literature, Olga Lang concludes "man's supremacy in society and family became complete" (1946:42). She further describes the expected virtues of women as "obedience, timidity, reticence, and adaptability" (1946:43). Fairbank adds that women were dominated by men and greatly inferior. A behavior pattern of obedience and passivity was expected of women. He further claims that although there were forceful women, they controlled by indirection, not by fiat (1948:28-42). Although greater detail is provided in the last chapter of my account, the sources are in overwhelming agreement with this brief description.

My early observations of female behavior were not consistent with impressions deriving from this literature. The first few weeks in Taiwan were devoted to locating a research site, advanced language training, acquiring and furnishing a house, and hiring and training assistants and an amah. We traveled in the big cities of Taipei and Taichung, their suburban towns, and the surrounding countryside. We often found women to be domineering and verbally

abusive or authoritarian in their relations with men. It is nearly impossible to spend more than five minutes in a busy market without hearing a woman arguing with a man and even berating him loudly. My wife was taught certain curses, to be addressed only to males such as a salesman or taxi driver. If the curses would not make a taxi driver operate his vehicle at a slower rate, she was told to hit him. We observed women hitting men with their umbrellas on at least five occasions although in only two of these cases did we collect data other than the observation. In one, a woman hit her husband because he had spent too much money drinking in the afternoon, apparently a frequent occurrence. In the other, a woman hit a pedicab driver whom she had not seen prior to that day in a dispute over a fare. When asked if she feared physical retaliation, she said that men seldom returned women's blows.

As we established intimate friendships in the cities and became intensively involved in the villages we studied, we continued to find that the behavior of women was consistent with our initial observations rather than the literature. For example, women were the most outspoken--men seldom raised their voices or verbally abused women; women frequently screamed at men, relatives and strangers alike. In the homes, women often controlled the family budget. I never saw a woman locked out of her

house overnight for misbehavior but on five occasions in the village during our residence, men slept all night on the ground because their wives had locked them out after they had come home too late or had spent too much money at a drinking party. One cold wet night I wanted to let a locked-out man sleep on my kitchen floor. My assistant, an educated Taiwanese, argued that it would not be best because the wife would get very angry and make trouble for us in the village. Our discussion was academic for the man was too afraid not to stay out. He said that his wife wanted him to stay out; he had done wrong, and if he came into our house for the night, his wife would not be satisfied and would only cause him more trouble.

Almost everyone agreed that women could bargain better than men and obtain lower prices. For example, the fare from town to my village was $24.00 to $26.00 on the taxi meter. It was extremely easy to negotiate a flat price of $20.00 and men who bargained hard could lower this to $18.00. However, women could get the price down to $16.00. No man could get the price this low and if a man began to get into a cab after a woman had negotiated a $16.00 price, the driver would refuse to transport him. Most village men attributed their family's ability to save to the dominance and thriftiness of women.

The longer we stayed in the village, the greater the accumulation of data which supported the discrepancy

between observed and expected female behavior. After my return to Michigan State University, I carefully reviewed the traditional literature in the light of this apparent discovery. There were many clues suggesting that the previous case had been overstated. There were a few examples of others who had already made the identical discovery, the earliest in the report of Yosaburo Takekoshi which was based on an extensive tour of Taiwan early in the period of the Japanese occupation. He illustrates this contrast between preparation and observation suggested previously in a single sentence:

> I had heard that the women of China were grevously [sic] oppressed, and I expected to find it the same in Formosa, but, after carefully investigating the facts, I have come to the conclusion that Formosan women enjoy more freedom in many respects than is allowed to their sisters in China (1907:310).

My discussion and interpretation of female behavior are disturbing to some educated Chinese for they too are enculturated in terms of their own "Great Tradition." Chinese friends who have read some of the following chapters argue that too much emphasis has been placed on the exceptions instead of on the actual traditional patterns. At a party one night, nine Chinese student friends stated that men usually controlled all the money in a Chinese household. However, in answer to my direct question about their own households, only two stated that their fathers controlled the money and the other seven, their mothers.

After a few minutes of discussion, eight of the nine students agreed that the fathers were proper and standard and the seven female examples in their respective homes were all exceptions. One student felt he needed further data. The facts in the example support my argument; the students' beliefs do not. The contrast between the facts and beliefs suggests the strong influence of the "Great Tradition" on individual members of a society. The nine students were actually surprised by the extent of female influence in their collective homes. Those in homes where mother was in control were somewhat surprised to find so many others in like positions. A. P. Wolf reports a similar kind of discrepancy between the "case enumeration summary" and the "villager's general summary" with regard to the frequency of marriage types in a Taiwanese village (1968).

A mechanism for the causes of incomplete observations and conclusions has been suggested, the previous internalization of a "Great Tradition." Cognitive dissonance theory (Festinger, 1957) helps explain the persistence of the belief in the face of contrary evidence. Cognitive dissonance theory states that when we obtain information which is inconsistent with our current beliefs, we are in a conflict situation. The conflict may be resolved by "denying" the new information or by changing the belief (Heiss, 1968:10). The examples previously listed

illustrate both of these possibilities. It appears that the normal tendency is to "deny" the conflicting interpretation. When one individual does make a breakthrough and changes his belief, it is easy for others to follow suit, assuming the new belief is supported by the evidence. It is much easier to join at least one partner in oppositition to the opinion of a group than to stand alone (Asch, 1955:35).

Taiwan as a Research Site

Most sinologists are extremely frustrated by the fact that they are not permitted to conduct research in Mainland China, primarily because of their inability to obtain the permission of the Communist government. This problem is particularly acute for anthropologists because of their research orientation which favors an intensive study of a single community by means of participant observation. A number of approaches have been employed in an attempt to overcome the frustration.

There have been studies of Chinese culture by means of documents at a distance (Freedman, 1958; 1966). There have been a few community studies in Mainland China but these are of questionable reliability due to the lack of the professional qualifications of the investigator (J. T. Myrdal, 1965), the personal ideologies of the investigators (Crook and Crook, 1959; 1966), or the extremely

short period allowed for the investigation (Geddes, 1963).

The most common approach has been to study a Chinese community outside of mainland China. Sometimes the communities function as sub-cultures in very different societies such as Indonesia (Tan, 1963) or Thailand (Coughlin, 1960; Skinner, 1957). In other cases, the communities are in areas of mixed political history and domination but which appear to have significant Chinese characteristics: Singapore (Freedman, 1957; Elliott, 1955), Hong Kong (Ward, 1954; Potter, 1968; Baker, 1968), or especially Taiwan (Gallin, 1966; Cohen, 1969; Wolf, 1968; Pasternak, 1969; Diamond, 1969).

All of the above communities have been strongly affected by foreign influences. This does not imply that mainland China has not been influenced; rather, extreme caution must be exercised in any attempt to generalize from the research site to mainland China for the extent of foreign influences are significantly different, both in quantity and quality.

There are good reasons why Taiwan is the most popular of these research locations. It is inhabited by Chinese people living in a Chinese cultural context under a Chinese government. The only official language is Mandarin Chinese. Six years of education are compulsory, nine years since 1968, and only in officially accredited government schools.

However, Taiwan has serious drawbacks. Fried believes the relatively shallow period of Chinese residence is the most serious of these (1966:285). Also, Taiwan was occupied by the Japanese for a fifty year period, a situation not dissimilar to the American occupation of the Philippines. Although Japanese immigration never reached high levels, contacts with mainland China during this period were nearly as restricted as they have been during the last twenty years. For the most part, there were only minor efforts expended to Japanize the island and these occurred primarily in the last portion of the period of occupation, since the nineteen-thirties, as part of the war effort. However, the degree of Japanization was quite unevenly applied, strongest in the urban and suburban areas of large cities. A successful individual had to become quite Japanese for education was in the Japanese language in a Japanese school system. During the fifty years, officialdom was Japanese or at the very least, Japanese-oriented.

Aside from the short period between the restoration in 1945 and the Communist conquest of the mainland in 1949, contact with the mainstream of Chinese culture has been almost completely curtailed. There were large numbers of people who migrated permanently from the mainland to Taiwan during that short period of four years. These migrants and their descendants are known as "Mainlanders"

and are contrasted with the "Taiwanese," those Chinese who were residents or descendants of residents before establishment of the Japanese suzerainty.

In 1945, the population of Taiwan was about 6,560,000 (Hsieh, 1964:212). During the next four years about 400,000 Japanese returned home and 100,000 Taiwanese came back from Japan (Hsieh, 1964:185). The net loss was offset by the migrants from the mainland which included 600,000 military personnel plus civilians conservatively estimated at a half-million and perhaps twice that (Fried, 1966:288). Most estimates today state Mainlanders constitute nearly 15 per cent of the population but some estimates range as high as 25 per cent (Latourette, 1964:42). Instead of a random sample of mainland population, the Mainlanders consisted of two rather distinct groups: a military one, not wealthy, most without dependents, and an urbanized Westernized set of business men, government officials, and professionals with their families. In either case, they tended to settle in urban areas.

Mainlanders and Taiwanese are not yet amalgamated and relations between them are often strained. Fried states that:

> The Nationalist government actively seeks to build an image of present-day Taiwan that features peaceful, pleasant accommodation as the mode of interaction between Taiwanese and Mainlanders. There is ample evidence . . . that the

> picture thus presented falls short of the reality--although overt antigovernment activity is subdued to the point that casual observers may be led to believe it nonexistent (1966:296).

This is a reasonable estimate of the situation. Many Taiwanese villagers I chatted with in several places on the island feel that they and the Mainlanders are different. They would generally be pleased to maintain the present level of social distance.[4] It appears that the government program of indoctrination and education in a common single language plus the effects of social interaction and intermarriage are reducing the extent of social distance.

Unlike Taiwan, mainland China is largely cut off from the remainder of the world. Her leaders have had little experience outside China. Few foreigners are permitted to reside in China or visit as tourists and even then, the movements of foreigners are greatly restricted. In contrast, Taiwan has a large resident foreign population, primarily American Military personnel, their dependents, and supporting organizations. Moreover, Taiwan is a major "Rest and Recreation" center for American troops from Vietnam, 40,000 per year, and is fast becoming a major tourist attraction, particularly for the Japanese. Most foreigners live in the large cities and their suburbs, particularly Taipei. English language signs abound and canned and dry Western foods are to be found in almost every grocery store even in remote

villages. Other Western goods may be purchased in the cities and towns. Movie houses all over Taiwan frequently run American movies, usually with Chinese subtitles. On television in rural villages, a favorite show was the American program "Combat" with Chinese subtitles. In these kinds of contacts and in the extent and depth of their influences, there are significant differences between Taiwan and the Mainland.

Finally, economic conditions are significantly different from those found on the Mainland. Taiwan has a relatively high standard of living as compared with the bulk of Asia. There is more industry, better educational opportunities, better transportation systems and better health care accompanied by lower mortality rates and longer life expectancy.

In spite of these problems, as previously argued, Taiwan remains the best site outside of the Mainland for research into Chinese culture. As claimed by Freedman, "Taiwan is China--that at least is not in dispute . . ." (1963:4). Even if it is eventually realized that research on Taiwan is not directly relevant to the processes of the mainstream of Chinese history, it is an excellent research site on its own terms, an example of a developing peasant society, a former colony, rapidly undergoing transformation and entering the mainstream of world change towards development of a modernized industrialized nation.

Constraints on the Selection of a Research Site

My original goal was to prepare a standard ethnography of a Taiwanese village. Ethnographic data normally may be used in a number of ways to further achievement of a number of goals. Some of these uses are planned and explicit; others are generated out of the field experience; and still others are not realized until later, after analysis by the original investigator or others. The latter use is especially dependent on the comprehensiveness of the original data. Every ethnography is necessarily highly selective. Out of a huge mass of behavior, the ethnographer abstracts selected aspects which he believes to be relevant in terms of his theoretical orientation or which bear on the problems under investigation. Since I originally had three major problems under consideration, they will be discussed briefly below because they affected the quality and quantity of the data and were important considerations in selection of the research site.

For the first, I am cooperating with my major professor, Dr. Bernard Gallin, senior investigator in a study of rural-to-urban migration and urban influences on rural village life, especially as the city becomes a stimulus for change. This research is primarily related to Taiwan but eventually may be extended to include other peasant societies. The first village studied for this purpose

(Gallin, 1966) was located many miles from a large city and required several hours travel to reach by local transportation.

To contrast with the kind of location studied by Gallin, it was desired to select a village which would be within commuting distance of a large city such that village residents could travel daily to work. Yet, to control as many other relevant factors as possible, it was necessary that village residents be descendants of Hokkien families who had migrated from Fukien at least one hundred years previously, whose primary occupations were in agriculture, and who possessed a clear identity as a community. In addition to the constraints on site selection, this cooperation in a study of rural-urban factors necessitated the collection of data comparable to that acquired in the original study conducted in 1957-58 (Gallin, 1966) as well as his follow-up study in 1965-66. The latter required duplication of one questionnaire administered to a sample of the villagers and another, to a sample of villagers who had migrated to the city of Taipei.

The second problem interest was due to the stimulation of Dr. John Gullahorn. I have a major interest in the computer simulation of human social behavior with a long-term goal of the eventual use of the data to build a computer model of the village which would simulate human

decision-making processes. Dr. Gullahorn's original simulation model involved a small number of people, three, who were artificial, and with considerable detail for each one (Gullahorn and Gullahorn, 1963; 1964). In complementary fashion, my intended simulation would involve more people, real rather than artificial constructions, and fewer details for each individual. This second problem interest necessitated selection of a fairly small village of manageable proportions, and the acquisition of a considerable amount of detail regarding every individual villager. Finally, to simplify the simulation, a relatively fixed structure and process would be an ideal. The fewer the changes that had occurred over the past fifty years, the better.

Finally, I and my wife, also a graduate student in anthropology, were both in the field at the same time and for the same general purpose, to conduct research on which to base our dissertations. The process required two independent community studies. However, since we were both interested in cultural and social change, it was possible to select sites which would maximize possibilities for understanding the processes of change. We decided to select two villages that represented relative extremes on a modern-to-traditional continuum. However, the two communities would be selected so that they would be nearly identical for as many other factors as possible: size,

age, ecological setting, etc., in order to allow for a "controlled comparison" (Eggan, 1954).

In order to meet the conditions imposed by the above three projects the object village would ideally have the following characteristics:

1. Population: 350 to 500
2. Reference Location to Large City: Daily commuting distance
3. Age: 100 to 250 years
4. Primary Occupational Structure: Agricultural
5. Primary Language: Taiwanese (Min-nan hua)
6. Place of Origin of Original Settlers: Fukien
7. Orientation: Traditional
8. Neighboring Village: Paired with one which shares a nearly identical ecological setting and as many of the other characteristics listed above as possible except that it should be relatively modern rather than traditional.

Except for the terms traditional and modern, all the above items were relatively easy to operationalize. Traditional is employed in the sense of emphasizing notions of continuity and stability (Sampson, 1964:723) and modern is its opposite, emphasizing change although no value judgment is intended. These terms are "ideal types" in a logical sense which provide limiting cases at each end of a continuum (Lockwood, 1964:312). No community fits at any one location on the continuum in every aspect, i.e., the more modern community with regard to most traits may be more traditional with regard to others, but two locations, in

general, may be relatively close or relatively distant to each other on the continuum. Traditional should also not imply stagnation for no village we visited in Taiwan was not extensively changed during the past twenty-five years. Easily contrasted factors distinguishing traditional from modern included housing types, extensiveness of material goods such as television sets, motorcycles, and sewing machines, changes in occupational structure, average level of formal education, and types of health practices. The traditional village was one which had changed relatively little in the last twenty-five years; the modern village was one which had changed considerably. I will illustrate with one concrete example. In the traditional village, mid-wives attended at births which have usually been in the home; in the modern village, most women went by bus to a Western-style clinic in town which was staffed with doctors, mid-wives and nurses.

Personal factors not directly relevant to the research design also influenced selection of the village: we would have to be accepted and locate housing. These two conditions did not prove to be problems since every site that approached reasonable congruence with the other above requirements would have seemingly made out entry easy.

Finally, I traveled with my family which included two school-age children. Since we planned on a residence

of eighteen months, it was necessary that we locate within reasonable commuting distance of an American school. This requirement restricted the locations to the countryside surrounding the large cities of Taipei and Taichung, each of which possessed an appropriate school.

Selection of the Subject Village

Due to the difficult terrain and state of the roads and transportation facilities in the main possible locations, investigation revealed that distances should be specified in terms of travel-time rather than mileage. It was arbitrarily decided that a minimum of one-half hour travel-time probably separated village from city life. Maximally, as travel-time approached or exceeded one and one-half hours, it appeared unlikely that the village would contain any daily commuters. With the help of the J.C.R.R. (Joint Commission on Rural Reconstruction) a pair of irregular concentric lines were drawn on maps of the areas surrounding Taipei and Taichung delineating the requisite distances of one-half to one and one-half hours travel-time. Demographic and ecological characteristics of all villages bounded by the lines were analyzed in a preliminary fashion with officials of the J.C.R.R. and with Professor Chen Shao-hsing of the Sociology Department at National Taiwan University.

We also discussed potential sites with officials in each township office and the local farmer's association linked with villages within the specified areas although at this period of first contact, our requirements were not revealed to consultants in the detail listed above. We then visited any villages within the area that remotely approached the specifications. On all occasions, we were accompanied by a minor official of the local farmers' association. The latter individuals have comprehensive knowledge of the local community and moreover, usually have good relations with most villagers.

Some sites were discarded immediately for such obvious defects as size, too large or too small, or economy, i.e., a factory located within village limits. More promising ones received a visit with local officials, a walking tour through the village, and chats with several residents. Such investigations took from thirty minutes to an hour and a quarter with an average of about 45 minutes each. There was the inevitable cup of tea with the mayor or some other important resident. In these investigations, the farmers' association official was invaluable for almost everyone knew the representative by name and wanted to talk with him. These investigations took one to three days for each township area. After examining the data upon completing a township area, most sites were eliminated. Those villages which still seemed promising were

revisited for a period of three to five hours. Finally, before going on to the next township, these latter sites were discussed again with senior officials who were familiar with demographic and economic details. Ten potential pairs of villages reached this level of analysis.

After completing the entire circuit surrounding Taipei and Taichung, more thorough analysis reduced the ten to a final three, one in the Taichung area and two in the Taipei area. Seven of the ten sites were eliminated solely because of the desire to minimize differences between the pairs of villages as discussed in connection with one research goal of a controlled comparison. For example, one village was considerably larger than the other; or one village was next to the river and the other was not.

We spent two full days in each of the remaining three pairs of villages. One of these was eliminated because it was too close to two communities in which many Americans resided and several of its residents were either working or had worked in American households as servants or gardeners. It was a "toss-up" between the final two. The one we selected saved a move of 100 miles and was nearest the school (1-1/2 hours) we thought best for our children.

All of this may falsely suggest that the community to be described in the following chapters is atypical for Taiwan. There were dozens of sites which satisfied all the specified requirements except the desire for a nearby sister village which would be identical in as many features as possible except the differences along a modern-to-traditional continuum. The presence of such a nearby village should have no effect on this current report which primarily focuses on the traditional village of the pair. Many other villages which would have served this last purpose equally well were located adjacent to even larger more sophisticated villages which contained factories and wine houses for example.

Research Methods

The standard methods of anthropological techniques were employed: participant-observation, mapping, census, interviews, etc. Although four key informants were developed and cultivated, at least four interviews were conducted with each adult resident of the village. Before departure, I knew and could recognize at a distance every adult and most of the children.

During the first nine months, we lived in the city of Taipei and commuted to the village. We came at different times of the day and evening and remained for various periods of time. We often stayed overnight. I rented a room (occasionally sharing it with single young

men) in a village house for a month at a time, each month a different house. In this room I conducted some interviews but primarily it was used for writing, organizing data, rest, and sleeping. I also took most of my meals with the household in which I had a room. This technique allowed me to become an intimate part, a boarder, in several different households. People could be on their best behavior for a few days, but it proved impossible to act unnaturally for an entire month.

During the last eight months, we moved into one of the two villages, Erhlei, in a household of our own. Since the two villages had one common boundary, were both located in the same li, and the village centers were separated only by the equivalent of one and a half city blocks, the particular village location did not appear to be important. We were quite surprised at the differences resulting from our establishment of a residence in Talei Li. We experienced a higher level of acceptance although we felt we had already established excellent relations. We were asked to serve in the Parent Teacher's Association and were now taxed for school and temple affairs. Although our children had visited the villages many times, they quickly established their own network of friends and associates and our son attended the local school one day a week.

Full acceptance is never possible. An American of European descent must accept the fact he will always be considered a rich, highly educated, kao pi tzu (big nose or Westerner). There are various clues to evaluate your level of acceptance. Your relative status may be assessed by where you are assigned to sit at a dinner in someone's house for locations at the table are ranked in order of importance. At a big festival such as a wedding for which there are many tables, relative importance is also assigned to different tables. For example, although the groom goes from table to table toasting the guests and being toasted in turn, he starts with the most important table and ends with the least. At the start of our study, we were the most prestigious guests at every function, even ranking above the mayor of the large nearby town of Hsin Tien. As time passed, we moved down the tables in rank position, joining the richer villagers but sitting below local village officials. At the last wedding, my wife sat at the lowest ranking regular table in the kitchen with the women in the immediate family since one woman in the family was one of her closest friends in the village and I sat at the third-ranking table with my "sworn brothers." Three months before I left, I had achieved a high level of acceptance by becoming a member of a chieh pai hsuing ti[5] (sworn brothers association). A final key may be found in the term of address which

changed from the inevitable Ba Syan Sheng (Mr. Barnett) to a kinship term or A Wei (Intimate A plus my first name). My wife was called A ku (FaSi) by most village children.

We employed a number of research assistants, primarily relying on three, two male and one female. One was well-trained and had had extensive experience with other American scholars. The other two were young college graduates, both with majors in agricultural economics and rural sociology. All three were fluent in Mandarin, Japanese, Taiwanese, and English. Additionally, each had a warm pleasant personality and quickly became popular with villagers. The three worked interchangeably with myself and my wife in both villages. Sometimes they worked alone and sometimes with one or the other of us or both. In field work with an interpreter-assistant, there are always problems in assuring faithful reproduction. No one language was universal for all villagers although Taiwanese approached it. Mandarin was a poor second. Constant rechecking of data through repeated interviews with the same informant and other informants with regard to the same data is a necessary and regular part of anthropological field research. By using different assistants for interviews regarding the same data with different informants, one is also able to assess the accuracy and ability of the assistant. We had studied Mandarin formally before leaving the United States and continued formal study in Taipei.

Taiwanese was studied informally in the village. Our limited command of the two languages also provided a means of checking data.

Additionally, two villagers were employed, one male and one female, both excellent in Taiwanese and reasonably fluent in Mandarin. The female was a young primary school graduate from Sanlei, primarily employed as household help. However, she was bright, active, sensitive, observant, privy to village gossip, the daughter of one of the informal village leaders, and proved most helpful. The boy was from Erhlei, a part-time farm laborer studying drafting nights and Saturdays in a Taipei technical high school. Villagers considered him a very good boy and he was very popular. He was first employed to make a village map of households and fields and detailed household plans. Since he had ready access to all village houses, he also made periodic inventories of possessions including the farm animals. He too became an excellent informant. Since both were bilingual in Mandarin and Taiwanese, they often proved useful as interpreters during our period of residence in the village for only one of the regular assistants lived in the village. Our ability in Taiwanese never reached a level sufficient for serious interviews but we could use it for simple polite conversation. We both understood more than we could speak.

Finally, mention must be made of the fact that there were two anthropologists in the family, one male and one female. There are some situations in which a male has a significant advantage, and others, a female. For example, I had a distinct advantage with regard to men's drinking parties, dirty-story telling, sex life, etc. On the other hand, it proved exceedingly difficult for me to interview women under 30 on many subjects and with regard to sex, almost any female at an age under 70 was nearly impossible. Indeed, for an anthropological study of Chinese society, I believe a Western woman has an advantage. She is fully accepted as a woman by the women and simultaneously is almost accepted as a man by the men. Although we each studied separate villages, we inevitably participated in the affairs of both. Discussion of data and interpretations constantly stimulated and encouraged both of us for each could bring a fresh insight into the other's problems.

In addition to the usual techniques, there were three special approaches. Because we eventually desired to compare the two villages, ten months after commencing field work, we jointly prepared an open-ended interview schedule which was independently administered to all adults in each of the two villages. An interview schedule prepared by Dr. Gallin was administered to a sample of village residents. Finally, a number of interviews were conducted

with villagers who had migrated to the city of Taipei, about half during their visits to the village and half in their city homes.

Approach to the Problem

A key term necessarily employed frequently in this report is "role." Since the term often has been assigned a number of different meanings, I shall employ the following definition in an attempt to avoid confusion:

> As an aspect of social structure, a role may be defined as a named social position characterized by a set of (a) personal qualities and (b) activities, the set being normatively evaluated to some degree both by those in the situation and others (Sweetser, 1964:609).

This definition does not maintain the distinction between status and role originated by Linton (1936:113-4) and expanded by others (Parsons, 1951:25; Radcliffe-Brown, 1952:11), i.e., status refers to the position and role to the behavior associated with it. Nadel's argument that it is pointless to separate a rule of behavior from its application is most convincing (1957:20-44) so I have combined status and role.

Roles do not exist in isolation. To identify a single role is always to identify by implication another role with which it is engaged in interaction patterns. For example, a teacher implies a student and a parent, a child. Merton proposes that role-set be used where a status entails more than one social relationship (1957:

368-9). I include the concept of role-set in my definition of role for there would be few roles which would not involve several social positions. A public school teacher in American society necessarily relates to such positions as student, colleague, and principal. She also probably relates on a secondary level to parents, board members, union officials, etc.

Since this study is of a small rural village, most relationships are inclusive and serial, termed by Gluckman "multiplex" (1964). By this he means that when two people interact in a multiplex relationship, it is likely that a large number of role relationships are involved. Although roles are not synonymous with people, each person may be examined analytically as if he were a bundle of roles. The characteristics of the bundle effect role behavior as does the personality of the individual. Part of the concept of role includes the idea of a script for acting. Some scripts are very explicit and others, quite general. Each individual follows his script somewhat differently. The major role I examine in the study is that of adult female. This role can be divided analytically into narrower roles such as wife, mother, aunt, girl-friend, customer, etc. The major relationship studied is between the adult female and the adult male, the latter similarly susceptible to finer distinctions. Abstraction at the highest level, i.e., male-female relationships, is attempted

although detailed data at lower levels are provided.

The next eight chapters contain an ethnographic description of Sanlei, a village in Taiwan, with particular emphasis on the role of women. The last chapter presents the general abstraction discussed in the above paragraph and contrasts it with an abstraction from the traditional literature. Possible reasons for the discrepancy between the two abstractions are considered and rejected in favor of the theoretical position advanced at the beginning of this chapter, i.e., the presence of a "Great Tradition" and its effects on the anthropological field worker. Implications for future research are then considered and a series of suggestions for reducing future errors are advanced.

CHAPTER II

THE SETTING

Location and Physiography

The island of Taiwan (or Formosa) lies on an arc which is convex to the Asiatic mainland and is bisected by the Tropic of Cancer. At its closest point, Taiwan is 90 miles from the province of Fukien on the Chinese mainland and nearly equidistant between Shanghai and Hong Kong, each 400 miles distant (Cressey, 1964:174). Six hundred miles up the arc to the northeast through Okinawa is the Japanese island of Kyushu. Down the arc in the other direction is Luzon in the Philippines a distance of only 200 miles (Cressey, 1955:234). Taiwan is shaped roughly like a tobacco leaf, about 245 miles long and 90 miles wide at its widest point. Its coastline of 700 miles is exceptionally smooth and unindented (Tregear, 1965:304). With a total area of 13,800 square miles, it is about the size of Holland or Massachusetts (See Figure 1).

The island, for the most part, is very mountainous. There are thirty peaks exceeding 10,000 feet in elevation

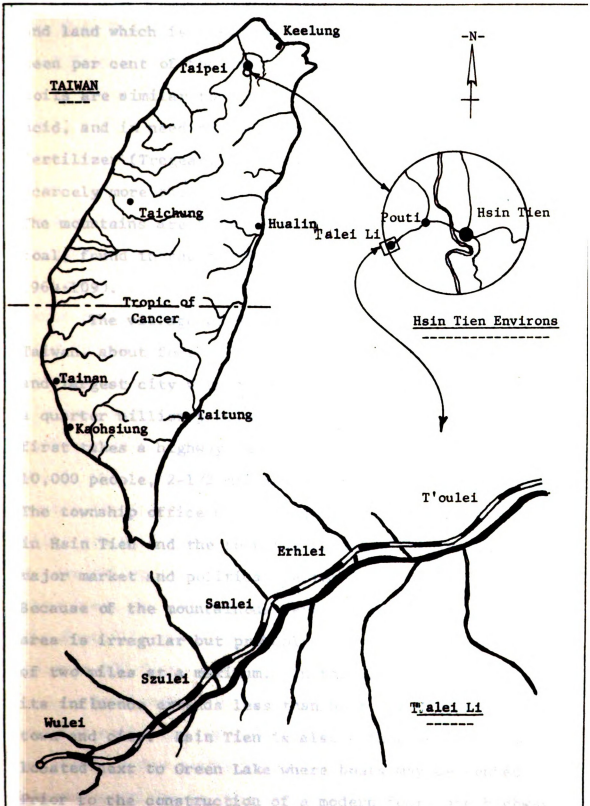

Figure 1. Map of Taiwan; Locating Sanlei Village

and land which is relatively flat totals only about fifteen per cent of the island (Cressey, 1964:177). The soils are similar to those of south China, mature, leached, acid, and in need of constant applications of lime and fertilizer (Tregear, 1965:306). Because of the terrain, scarcely more than one third of the land area is arable. The mountains are forested with some minerals, chiefly coal, found in the northern end of the island (Hsieh, 1964:109).

The village of Sanlei lies in the northern third of Taiwan, about four miles south of Taipei, Taiwan's capital and largest city with a 1965 population exceeding one and a quarter million people. To travel to the village, one first takes a highway bus to Hsin Tien, a town of over 10,000 people, 2-1/2 miles south of Taipei (See Figure 1). The township office with hegemony over Sanlei is located in Hsin Tien and the town has traditionally served as the major market and political center for the nearby villages. Because of the mountainous terrain, the extent of the area is irregular but probably does not exceed a radius of two miles at a maximum. In the direction of Taipei, its influence extends less than half the distance between town and city. Hsin Tien is also a famous tourist mecca, located next to Green Lake where boats may be rented. Prior to the construction of a modern four-lane highway in 1959, there was also a train from Taipei to Hsin Tien.

The Hsin Tien river runs through Hsin Tien on its way past Taipei to its mouth at the northern end of the island.

From Hsin Tien to Sanlei, one must travel on a small rickety local bus a distance of another 2-1/2 miles on a road which meanders, generally in a southwest direction. About half way to the village the blacktop two-lane road narrows to one lane. When two vehicles meet, there is usually an argument about which one will back up to one of the various wider places in the road to let the other pass. There is a small creek which parallels the road for most of the distance to Hsin Tien. About half-way to the village, two lines of foothills can be seen in the distance slowly converging on the road until they meet rather abruptly at Wulei, two villages beyond Sanlei. In Wulei, the road ends with a "turn around" where the bus starts its trip back to Hsin Tien. In Sanlei, the foothills are only about 200 yards apart but even then, the narrow valley is terraced. At its lowest point, next to the river, the village elevation is about forty feet with the foothills rapidly rising to peaks with an elevation of over 800 feet.

Settlements in the area are primarily nucleated, a compact collection of houses surrounded by their fields with only a few scattered individual households. The nucleated settlements range in size from 8 or 10 houses to large villages with over 200. The larger villages are all

near the road and stream while the smallest units are up in the mountains. The bus stops at each village and also at several places on the road where narrow paths lead to other villages not on the road. The village centers are not far apart, for the most part ranging from 200 to 350 yards.

Upon reaching Sanlei the bus stops just beyond the center of the village in front of the temple (see Figure 2). It had stopped in the previous village of Erhlei about 250 yards back and also at a spot about half way between the two villages where a path leads up the mountain to a small village. After leaving Sanlei, it is 300 yards to Szulei and another 250 yards to Wulei, the end of the bus line.

The bus does not keep its schedule of nine trips per day due to frequent breakdowns. Since it takes about twelve minutes to go from Sanlei to the end of the line and back, villagers rarely prepare to go to town until the bus has passed. The twelve minutes between the time the bus passes on its way to Wulei and its return in the direction of town are often witness to much confusion and scrambling in the village by prospective passengers for the bus driver rarely stops unless the passenger is at the labeled bus stop.

Sixty-six households containing 409 people comprise Sanlei village. Talei, the li of which Sanlei is a part,

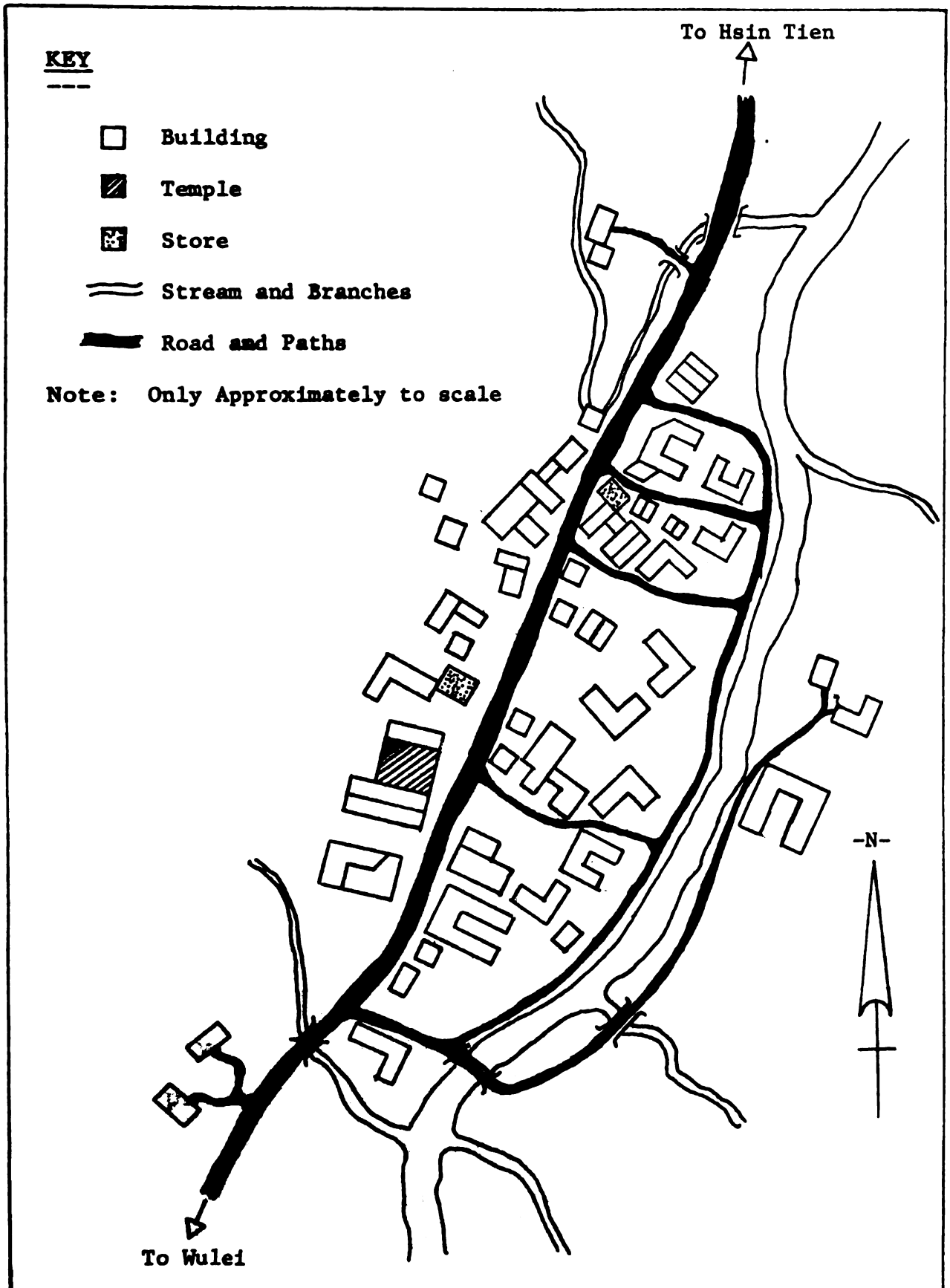

Figure 2. Map of Sanlei Ts'un (Village)

contains 248 households, about 1550 people.[1] Sanlei village is long and narrow. To the right is a single line of houses following the road with the first and last two separated from the remaining houses which are very close together. On the left, the distance from the road to the creek ranges from 50 to 125 feet. The majority of village buildings are in this area, many fronting on the road, others on one of the five paths from road to creek, and the rest on the courtyard in front of the temple. Three buildings are located across the creek (see Figure 2).

Weather

Taiwan lies off the east coast of Asia athwart the Tropic of Cancer and is surrounded by warm ocean currents. The northern and summer monsoons influence the weather although all weather is conspicuously modified by Taiwan's rugged topography (Cressey, 1955:238). The north is subtropical and the south, tropical. In the north, winters are cold but rarely does the temperature extend below 40° F. Summers are long and hot, but the temperature reaches 95° F infrequently in the village. Most nights are cool due to the ever present winds. Humidity is nearly always high. Taiwan is in the prime typhoon belt and about three typhoons a year usually pass directly over some part of the island and many others pass nearby. Typhoons dump copious quantities of rain and the winds often cause extensive damages.

Village men agree that about once every three years, one crop is seriously reduced by typhoon damage.

Temperature and rainfall in the village are not too unlike those in Taipei although the village and Taipei are separated by the chain of foothills (see Table 1 for official Taipei records). Rain is fairly constant in the northern part of Taiwan. During the last twelve months of our stay, there was rain on 191 different days. Although the yearly mean for rain is 72.4 inches, the year with the least amount totaled only slightly less, 65.3 inches.

Table 1. Taipei Climatic Averages for 56 Years (Taken from Nuttanson, 1963:128)

Month	Temperature High (Mean)	Inches of Rain	Per Cent Humidity
January	59.3	3.1	83
February	58.9	5.2	85
March	62.8	7.0	84
April	69.2	6.8	83
May	75.9	8.7	82
June	79.9	11.2	82
July	82.6	7.5	79
August	82.4	9.3	79
September	79.8	6.4	80
October	73.9	3.1	80
November	68.5	1.9	80
December	62.4	2.3	82
Year	71.3	72.4	82

During the heaviest year, one with three typhoons in the northern area, rainfall reached 124.9 inches. Except when typhoons are nearby, rain is usually in the form of a drizzle. The average number of days with precipitation

is about 184.4 (Nuttanson, 1963:130). In the winter, it rains more frequently, a little nearly every day and we often experienced two or three consecutive weeks without seeing the sun. Although the total quantity of rain is highest during the summer months, much of the summer rain falls during heavier rainstorms.

Historical Setting--Taiwan

The prehistory of Taiwan extends several centuries into the past. The base of origin and the cultural backgrounds of the various groups which migrated to Taiwan are matters of some dispute (Farrell, 1964; K. C. Chang, 1956). The remaining descendants of the early settlers now number about 200,000 and still live in the mountains where they are classified as aborigines (Cressey, 1964:174-5). The aborigines are usually classified into seven tribes or three language families. The languages are related to various Southeast Asian languages and aboriginal languages in Okinawa and the Philippines (Farrell, 1964).

The existence of Taiwan appears and disappears in the historical record of the Chinese empire. Meaningful settlement did not begin until the 12th century and large numbers emigrated only after the start of the 17th century (Hsieh, 1964:149). During the 15th and 16th century, Taiwan was the home base for Chinese and Japanese pirates who attacked shipping in the South China Sea. The Dutch, Portugese, and Spaniards vied for control of the island

in the 17th century but have left little long term effects. A Ming general, Cheng Ch'eng-kung (Koxinga), fleeing the Manchus with his army wrested control from the Dutch and established an independent kingdom in 1661. The Chinese population of 100,000 grew rapidly during the next 200 years for Taiwan served both as a refuge and as a frontier area with undeveloped land attracting people from Fukien and Kwangtung. The island was incorporated as a fu (district) of Fukien in 1683 and as an independent province of China in 1886 (Davidson, 1903).

Its provincial status was short-lived for Taiwan was ceded to the Japanese at the conclusion of the Sino-Japanese war in 1895. Japan restricted further immigration into Taiwan from the Chinese Mainland and controlled the island until Restoration[2] to the Republic of China on October 25, 1945 (Hsieh, 1964:662-83). Under Japanese control there were great improvements in health, agriculture, transportation, and later, industrialization. In spite of many promotional efforts, Japanese immigration never reached high levels. After the Restoration, there was a short period of economic decline and subsequently, rapid advances in all the areas listed above. For example, between 1960 and 1966, the annual growth of the G.N.P. was at a rate of 9.7% while the cost of living remained relatively stable (Emery and Lee, 1967:808).

It is important to realize that Taiwan did not consist of vacant land to be settled by Chinese immigrants. It was occupied by the aforementioned aborigines who were hunters, gatherers, and swidden agriculturalists. As the Chinese settlers arrived they faced constant warfare as the aborigines were gradually pushed back into the mountains. The early history of many Chinese settlements on Taiwan is not unlike that of the American West with forts and raids and war parties while some bandits and renegades made accommodations with the aborigines. Pacification was still not complete as late as World War II.

Historical Setting--Sanlei Ts'un

The local history of the village naturally meshes with the brief general picture described above.[3] It is based on family history books and the memories of elders. At points, it is confirmed by local gazetteers but much is uncertain and the dates which are listed must be considered approximations.[4]

Village history begins about 135 years ago (1830) in a village in Fukien. Three family record books give the following address: Wu K'eng, Ch'i Pa Liu, San Chieh, Erh Tu, Chao An Hsien, Chang Chou Fu, Fukien. Three men were sent from this village to Taiwan to locate land for a large migration. There is no reason suggested for the move other than economic opportunity. We do know that

there had been a great deal of migration from the Chang Chou region of Fukien to Taiwan over an extended period of time. The three men first came to the Wan Hua region of Taipei City and stayed with relatives while looking for land. They felt that most of the best and convenient land was already occupied for by the middle of the nineteenth century, migration had been heavy for a long period of time. How they discovered the Sanlei area is unknown. In any case, they wrote back to the village for people to come. Counting the three men, eighteen families settled in Sanlei, all but one surnamed Liao. The lone Yu was a ch'in ch'i (affinal relative) who died without progeny. The economic condition of all eighteen was equal, quite poor. It appears that this was the second village to be settled in Talei Li, but all five villages were apparently established within a five year period. Moreover, the entire li was settled by people from the same area in Fukien. The early years were very hard for land had to be cleared and crops established while under the constant threat of attack by the aborigines living in the surrounding mountains. Remnants of the bamboo-walled forts which surrounded each village can still be found slightly below ground level. The last villager was killed by aborigines as recently as 1920.

The migrants brought with them a statue of the god Shih Fu Yang from their village in Fukien and he was

installed in a small temple. They also brought an earth god statue (T'u Ti Kung) which was established in another very small temple. Both temples have remained important in the village through to the present. About 30 years after the settlement was established, a large temple was built. It was destroyed in a 1943 typhoon and rebuilt after World War II.

The original settlers constituted a corporate group who cleared and cultivated the land in shares. Some years passed before the jointly-owned land was divided among the 18 share holders. In essence, the community constituted a single surname village, not unlike the description furnished for many communities in Southeast China where it may be considered to have originated (Freedman, 1958). No other village in the li was a single surname village. Moreover, it appears that the settlers in other Talei villages came from a variety of villages in Mainland China rather than one. Sanlei has always maintained a higher level of integration and cooperation than surrounding villages. Although almost all early settlers were surnamed Liao, they were not all able to specify their degree or details of relationship. The story of the eighteen shareholders and the problems they encountered are widely known to villagers although there is some dispute over minor details. Anyone who has lived in the village a year or two will be able to repeat the

general story.

Other families continued to migrate to Sanlei and to the other villages in the area. By no later than 1880, the village reached a population of slightly over forty families and it seemed to remain about that size until after the Restoration. In the nearby mountains, some li families took up banditry which continued into the twentieth century. A favorite crime was kidnapping for ransom. The bandits were able to make temporary liaisons with the aborigines. Some current villagers are descendants of bandits and still possess the consequent stigma. Several people told me that one of the reasons for preferring to bring in brides from the south was they were less likely to have descended from bandits. One powerful and influential man in the li is the son of the last bandit chief.

The arrival of the Japanese at first had little effect on the village for the area was remote and there was only one narrow foot path from the village in the direction of Hsin Tien. The continuing activities of the bandits were not tolerated by the Japanese. In 1905, a punitive expedition was sent into the mountains. This force greatly frightened villagers and many fled and hid in the mountains. Unfortunately, it was difficult to distinguish between bandit and farmer and about 15 or 16 Sanlei villagers were killed and about one third of the

village homes were destroyed. Similar results obtained in the other villages in Talei Li. This event was within the memory of older informants who were quite incensed about the destruction of innocents. On other occasions, there were no doubts that the villagers had cooperated with the bandits, supplied recruits, and benefited financially from their activities.

Soon after the above punitive expedition, a police station was established in the village temple and it was periodically staffed for irregular periods until the late thirties with a detachment of two or three men. It was a branch of a more important and permanent station in Pouti which, in turn, was a branch of that in Hsin Tien (see Figure 1 for relative locations).

The destruction of village homes did not mark an auspicious beginning for the occupation. The Japanese employed other oppressive measures as well. As part of a Japanization process, they destroyed ancestral tablets and forced villagers to worship Japanese Shinto gods. It became necessary to learn Japanese in order to conduct business with the government. The policemen carried long sticks and beat transgressors on the spot. They also impressed village men into labor battalions for road and sanitation work. There was great resentment over corvee work at locations not in the immediate village area. Nevertheless, these activities did not destroy positive

sentiment towards the Japanese. Most villagers now claim a man was beaten only when it was deserved and labor work was shared equally except during the war when some men were conscripted into labor battalions and sent to other countries.

The Japanese ruled Taiwan somewhat after the pattern of the British in India, i.e., they worked through the local system and local officials.[5] Talei was divided into two parts, two separate pao as part of the pao chia system.[6] T'oulei and Erhlei were combined in one pao and the remaining three villages into another. All five were not reunited into a single administrative unit until after the Restoration. The two pao represented a cleavage along traditional factional lines. (Details of this factionalism are discussed more fully in Chapter IV.) The factions seemingly are based on a regional factor, one end of the li against the other, but there are also differences in ecological conditions and the respective value systems, T'oulei and Erhlei have less land and are more progressive. Although the five villages have always cooperated in maintenance of the li temple located in Erhlei and the li has but one school, the two factions are an uneasy combination. At present, each faction is represented in all administrative bodies, i.e., if the li chang (mayor) is from one faction, then the representative is

from the other; or if the farmers' association small unit head is from one faction, the vice head is from the other.

Many of the men but only a few women learned some Japanese and several became quite fluent. A Japanese school was established in Pouti near the police station and a small percentage of the villagers, primarily male, were permitted to attend. It appears that although there were increases as time passed, total attendance never exceeded fifty per cent of those in the requisite age groups. Secretly and illegally, a Chinese school was operated in the village but seldom did more than 15 students attend regularly.

Economically, there were many improvements. The narrow path to Hsin Tien soon became a one lane dirt road. Coal mines were started in the immediate area and a very narrow gauge railroad was built from the mines into Hsin Tien just before World War I. Both road and railroad improved communication with Hsin Tien. Tea plantations, common in Northern Taiwan, were introduced to Talei about the time the railroad was built. Citrus orchards started to replace tea during World War II. Improved seed varieties, fertilizer, insecticide, and farming techniques increased agricultural income a great deal. The Japanese introduced farming cooperatives in the nineteen twenties which increased the flow of information to the village.

Efforts towards Japanization were maximized during World War II. Men were conscripted into labor battalions, some for short periods nearby and others were sent to conquered territories such as the Philippines. A small acid factory was built near the village during the war and just before the war ended, American planes strafed the factory and killed three water buffalo and two people. (It is interesting that the story of the attack was always repeated with the deaths of water buffalo listed first and the two children, a girl from Erhlei and a boy from Sanlei, listed last.)

When control was returned to the Chinese (referred to as the Restoration), villagers were excited and pleased. Unfortunately, a particularly harsh Governor, General Chen Yi, was appointed and his measures were extremely abusive. He was executed on June 16, 1950 for his "abuse of the Formosan people in 1946 and 1947" among a list of other reasons according to the government announcement (Kerr, 1965:396). The initial good will was soon dissipated. In spite of the arguments of the official government, the Taiwanese, those who were residents before the establishment of Japanese suzerainty, carefully distinguish themselves from those who came later, the "Mainlanders," as the latter distinguish themselves from the Taiwanese. The identification is permanent, i.e., the children of Mainlanders are Mainlanders even when born on Taiwan.

The Taiwanese seemingly equate some Mainlanders with villagers in Fukien, although as previously suggested, the Mainlanders were not representative of rural Fukien. This mistaken identity helps support the villagers' belief that the Taiwanese are now significantly different from the Fukienese still in China. It would seem that the real differences are probably not great. That is, the differences in cultural behavior of the people of Taiwan as compared with those from Fukien was probably no greater than the differences between the latter and the people from Kansu or Hunan. The differences between urban and rural types are probably considerable in any location. However, for predicting behavior, particularly motivated behavior, subjective reality may be more important than objective reality. Taiwanese and Mainlander are self-identified as different groups. Each is an "in group" and treats the other as an "out group." The Taiwanese generally feel that the present government is controlled by "outsiders."

Sanlei village as well as the entire li has prospered during the last twenty years subsequent to the return of control to the Chinese. Agricultural techniques have continued to progress, and production is at its highest levels in history. The farmers' association has been most active in introducing improved techniques and providing supplies such as insecticides, new seeds, and

fertilizer. The expansion of production in the coal mines and industrial growth have meant more non-agricultural economic opportunities for villagers. The extent of democratic participation in decision-making processes has increased. The li now has its own school with attendance reaching nearly 100%.

As part of a war dispersal process, the government established a branch of the Communication Bureau in Wulei, the last village in Talei Li (see Figure 2). Most of the Bureau's employees live in company housing. Since they are nearly all Mainlanders, the former Taiwanese residents had to move out. Although Wulei is still officially part of Talei Li, its Mainlander residents do not participate in li politics or li religious affairs. The children do not even attend the li school. Instead, they travel daily to a school in Hsin Tien which has a much higher academic reputation. The attitudes of the Mainlanders in Wulei towards the Taiwanese are characterized by a high level of ethnocentrism. They frequently curse the Taiwanese and berate them.

To facilitate transportation to the Communication Bureau, the government blacktopped the road all the way from Hsin Tien to Wulei. A small bus company maintains a route from Hsin Tien to Wulei and back nine times each day. Mainlanders seldom travel on the bus however, possessing a private bus on which only Bureau employees and

their families are permitted to ride. The narrow-gauge railroad was eliminated and coal is now hauled by trucks. The government Wine and Tobacco Monopoly was establishing a branch tobacco processing factory half way between Talei Li and Hsin Tien just as we were leaving Taiwan. This was expected to open additional employment opportunities in the immediate area.

Sanlei village is now enjoying its greatest economic prosperity according to all objective indicators. Moreover, health care is better than ever before in history and the death rate is at its lowest point (see next section). Educational opportunities too have reached a peak. Nevertheless, the period of the Japanese occupation has been greatly romanticized. Men over 35 are proud of their ability to speak Japanese and a few long for the return of the Japanese. Middle-aged villagers argue that they have been ruled by "outsiders" for a long period of time, first the Japanese and then the Mainlanders. Moreover, many agree that the Japanese did a better job for they claim under Japanese control, prices were more stable, officials were more honest, and one did not fear robbers. One fifty-year old man in a group once said that when the Japanese were here, one day's labor paid for three day's basic living but that now it took two day's labor to pay for three day's basic living. The group all nodded in agreement. Since this statement failed to accord with the

other kinds of physical evidence, we contrasted the average day's wage and the average cost of rice and pork under the Japanese and under the current conditions and by computation proved that a day's labor now bought more pork or more rice than it had under the Japanese. The men felt that there was either something wrong with their memory of rates or prices or that our figuring now was incorrect. They knew they earned more under the Japanese in real income. It is plain that the facts and beliefs are not in accord. Probably adding to the romanticization of the period is the fact that the Japanese were few in number when compared with the Mainlanders. In a typical week for instance, only about a dozen or so Japanese appeared in Talei Li. Today, with the Communication Bureau, the school, the police, and various salesmen, several hundred Mainlanders may be observed in a single week.

Government propagandists, the schools, and the army are all engaged in an attempt to overcome the antagonisms on both sides. The incidence of inter-marriages between groups is increasing. The eventual goal of the government is a united Taiwan but success is not certain. Chinese history provides many examples of two culturally different groups, racially near identical, living side by side in the same area for hundreds of years while preserving distinct identities. For example, a minority group of Hakka have maintained and still maintain a separate ethnic and

linguistic identity after a residence of several hundred years in Fukien from whence the majority of Taiwanese migrated. This separate identity has extended into Taiwanese and Hakka settlements on Taiwan. Currently, the enforced use of a single language, Mandarin, in the schools and the army (both of which are compulsory for males while schools are compulsory for females) should aid in breaking down the communication barriers and help lead to amalgamation between Mainlanders and Taiwanese.

The Population

The total population of Taiwan in 1966 was 13,383,357 (United Nations Statistical Yearbook, 1968:808). There has been a tremendous expansion in recent years. The 1940 Japanese census listed 6,077,478 which grew to 6,560,000 by 1946 at the time of the Restoration (Hsieh, 1964:206). There was a great influx of Mainlanders following the loss of mainland China to the communists, undoubtedly exceeding a million people.

Taiwan's population can be divided into a number of categories as is done regularly in the official records. With approximate official percentages listed for 1963, the categories are foreigners (negligible), aborigines (1), Taiwanese (86), and Mainlanders (13) (Hsieh, 1964:206). The Taiwanese may be further divided into Hakka, Hokkien, and minor numbers of others.

Sanlei's population in 1966 was 409 which could be divided into 66 households. Talei Li's population was approximately 1550, divided into 248 households. Except for Szulei which is somewhat smaller, the five villages in Talei Li are nearly the same size. The distribution of the population in Sanlei village does not appear similar to the distribution presented above for all of Taiwan for Sanlei is essentially a Hokkien village. There are three Mainlanders, all retired soldiers, living in Sanlei; one is merely renting a village hut and the other two are adopted-in husbands. There is an aborigine woman (perhaps part aborigine), 45, married to a village man. None of these four have gained full acceptance.

During our study, a village boy brought back a Hakka wife when he completed military service. She does not speak Taiwanese and is sure to have a difficult time if they remain in the village. The general appraisal of Hakka women is that they are domineering, hard workers, and sexually demanding.

Another man who is an adopted-in husband has a mixed identity. He migrated from Fukien to Taiwan as a miner during the war between Japan and China. (The Japanese brought many Chinese miners to Taiwan to work in the mines as part of the war effort.) Although he was classified as a Mainlander by the Japanese, he is nearly accepted as a Taiwanese by the villagers. At least, in answer to the

question about how many Mainlanders are living in the area, he is rarely cited.

The ethnic identity of the Taiwanese is very strong. The villagers uniformly claim that the ethnic or sub-cultural distinctions cited above are very important. Marriage between such groups is considered very bad and undoubtedly a cause of problems. The barber in my village who was seeking a wife once asked if I knew of any eligible girls. Since I suggested an attractive conductress on the local bus, my quality rating as a matchmaker immediately dropped very low for the girl was a Hakka. Not only would marriage to a Hakka be against the dictates of common sense, it might be very bad for his business as he could easily lose many customers. The story of my suggestion was repeated several times, always causing amusement. It was interesting that it never proved necessary to specify the girl's ethnic identity. As soon as she was identified as the young bus conductress, everyone knew she was Hakka. I was often amazed at the ability of people to distinguish at a distance Mainlanders, Taiwanese, and Hakka.

The distribution of the village population by age and sex is indicated in Figure 3. This pyramid is a fairly normal example of a population with a high birth rate and a rapidly falling death rate with only one serious deviancy from what might be expected: the age bracket from 20 to 29

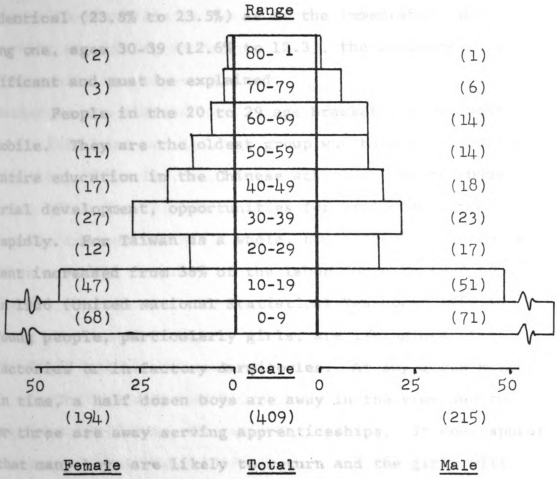

Figure 3. Population Pyramid, Sanlei Village, 1966

is seriously under-represented. In comparison with figures for all of Taiwan at the end of 1966 (United Nations Demographic Yearbook, 1967:172-3), the percentage distribution is nearly identical for most categories although there is a slightly higher percentage of people under 10 and also of people over 60 in the village as compared with the nation. However, in the 20 to 29 age bracket, the village percentage is 7.1% as opposed to Taiwan's 13.2%. Since the immediately preceding category, ages 10-19, is nearly

identical (23.8% to 23.5%) as is the immediately succeeding one, ages 30-39 (12.6% to 12.3), the deviancy is significant and must be explained.

People in the 20 to 29 age bracket are the most mobile. They are the oldest group who have received their entire education in the Chinese schools. Due to industrial development, opportunities for employment increased rapidly. For Taiwan as a whole, non-agricultural employment increased from 38% of the labor force in 1952 to 49% in 1966 (United National Statistical Yearbook, 1969:109). Young people, particularly girls, are living near the factories or in factory dormitories. At any given moment in time, a half dozen boys are away in the army and two or three are away serving apprenticeships. It does appear that many boys are likely to return and the girls will probably marry out while their replacements in a kind of equivalence exchange will marry in from other villages. This hope for the return of the young people to the village is based on many examples of urban dwellers who have returned. The village barber served an apprenticeship and worked in town for seven years, returning to the village at the age of 25. Both of the sons of Liao Tu, the temple caretaker, worked at a factory in town where they were registered. The oldest got married and returned to the village at age 27 when his first child was due. The younger son is now back and plans to get married soon and

live with his bride in the village. Another young couple, working and living in Peitou, returned to Sanlei when their child was eighteen months old because the boy's father became ill and required help with farming. Since it is felt best not to marry until after satisfying the military obligation, many boys marry soon after returning home, often drawing brides from the pool of factory girls. Because few married girls continue working in the factory after marriage or after the first child is born at the latest, the age when they return to the village helps explain why the 30-39 age bracket is fairly standard while the 20-29 bracket is under-represented.

The sex ratio of 110.8 is higher in the village than the 105.7 over-all ratio for Taiwan (United Nations Demographic Yearbook, 1967:172-3). This difference is partially due to the influx of Mainlanders since the four residents were males only and also to the greater shortage of girls than boys in the 20-29 age bracket discussed above. For example, eleven girls and only three boys were living in factory dormitories. This surplus of males is significantly different than the sex ratio of 94.2 found by Gallin for his village on the west central plain (1966:33). Women are more mobile than men for factory work in Sanlei and moreover, it is possible for men to continue living in the village while working in the city. Factories often provide supervised dormitory accommodations

(room and board) for girls but seldom for boys. An identical pattern of high sex ratios in the rural area is found in the United States in spite of the country's overall sex ratio of less than one hundred. This difference in the two areas of Taiwan might be a key to assessing the levels of modernization. It appears that Sanlei is more like rural America than for example, Gallin's Hsin Hsing, for it has the same high sex ratio and the identical practice of a higher percentage of girls than boys migrating to the city to work.

The average age of the Taiwanese population is seventeen years and four months (United Nations Demographic Yearbook, 1967:718). The average age of the Sanlei villager was just under 15. This difference too is partly due to the missing group in the 20 to 29 bracket explained above. It is also due to the fact that rural farmers are more fertile than urban dwellers and therefore, more young children are included in overall figures, lowering the average age.

An examination of the population within prime working ages, those between 15 and 64 as conventionally defined (Barclay, 1954:98), exposes a major village problem. Only 44.2% of the Sanlei villagers are in this primary work-force category and 55.8% are dependent. For Taiwan as a whole, 52.9% are in the prime work force (United Nations Demographic Yearbook, 1967:172-3) while in the

United States, as in other highly industrialized countries, the percentage of the population in the prime work categories often exceeds 65% (Barclay, 1954:99). One of the problems of underdeveloped countries is the fact that such a large percentage of the population is dependent on others for sustenance. One could argue that individuals outside the conventional age range (15 to 64) are economic contributors and this is true for Sanlei village. Of course, it is also true for industrialized countries as well. Partially reducing the problem is the fact that entrance into the permanent labor force is at a younger age in Taiwan than in major industrialized nations (Barclay, 1954:98-100), and that the lack of a well-developed retirement system requires meaningful employment during the later ages beyond 65. Since education for villagers rarely extends beyond primary school, most villagers enter the regular work force permanently by age fourteen.

Taiwan has been undergoing a rapid population explosion. This is primarily due to a rapidly falling death rate which has reached an extremely low figure combined with a high birth rate which has more recently begun to fall. The figures in Table 2 indicate changes in demographic rates in Taiwan during the past sixty years. The death rates started to fall after 1920 and have reached a figure currently much lower than those

Table 2. Historical Demographic Rates for Taiwan (Prior to 1950 from United Nations Demographic Yearbook, 1955; remaining from United Nations Statistical Yearbook, 1969)

Years	Birth Rate	Death Rate	Natural Increase
1906-10	41.7	33.4	8.3
1916-20	40.4	31.0	9.4
1926-30	45.0	22.1	22.9
1936-40	45.4	20.6	24.8
1948-50	41.5	12.9	28.6
1955	39.5	6.9	32.6
1960	34.5	5.7	28.8
1965	28.5	5.5	23.0

recorded for Western industrialized nations.[7] No corresponding change occurred in the birth rate until the most recent period. Surveys now indicate a growing desire for smaller families (M. Yang, 1962:69-71) and modern birth control practices are gaining in popularity, particularly the use of "Intra-uterine Devices" (I.U.D.).

The natural increase is still very high but the situation seems to be coming under control. An annual growth rate of 30.0 (3%) means a doubling of a population in just over 25 years. W. Thompson extended current growth rates in 1958 to suggest that the population of Taiwan in 1980 would likely number about 18 million (1959:363) provided the necessities of life could be supplied in about the existing amounts per capita. He further added that as an isolated economic unit, even with a modest population increase of one per cent per year, it was unlikely that Taiwan would be able to maintain her present per

capita income which has been higher than the average for Asia (1959:367). At an increase near three per cent, it would be highly probable that the positive checks envisioned by Malthus (war, famine, disease) would assume dominance and result in a spiraling death rate simply because of the shortage of sufficient food to support healthy life. There are strong indications however, that the negative checks Malthus envisioned (birth control and delayed marriage) are becoming operative. The birth rate has begun to decline rapidly (see Table 2) and the average age at marriage is higher than ever before.

Even as late as the early nineteen-sixties, the government had approached birth control with mixed emotions. On the one hand, there was recognition of the man-land relationship and the necessity for enforcing a balance; on the other hand, there was a felt need for a sizeable birth rate to produce soldiers to eventually retake the mainland. Official birth control programs started slowly but currently, clinics are widely available. A government-subsidized clinic in Hsin Tien will insert an Intrauterine Device for Sanlei residents at a cost of $30.00, about one-fourth the charge of a private doctor.

Thompson's other assumption of Taiwan as an isolated unit is also not supported. Foreign trade is increasing and the rate of increase in Per Capita Income is

greater than the increase in population (K. T. Chen, 1967: 98).

Sanlei demographic records for 1966 during our study indicate that the village does not deviate much from the total island figures indicated in Table 2. Thirteen births yield a rate of 31.8 and seven deaths, a rate of 11.9, for a combined natural increase of 19.9. This increase, lower than the total island figure of 23.0, is partly due to the larger numbers of old people in the village and also due to the missing people in prime childbearing ages. However, the mid-year population of 409, a very small "n," does not really allow for meaningful contrasts, i.e., one more birth would have meant nearly identical increase rates. Many village women are now practicing birth control and the average age at marriage is also creeping upwards, both factors contributing to the trend to a smaller rate of natural increase.

Social Organization

Chapters IV through VI are devoted to selected aspects of social organization: formal organization and social control, kinship, and voluntary organization. A brief summary of the three chapters is presented below in order to set the stage in a general way both for this overview and to make each chapter fit into the context of the whole.

Individual villagers are combined into chia (families) and hu (households). Although the two terms are not necessarily synonymous, in Sanlei they are effectively identical for each hu consists of a single chia. Although there is a range from one to nineteen, the average size of the chia is 6.2 members in Sanlei, and 6.25 members for all of Talei Li including Sanlei. These household averages are significantly larger than the 5.8 listed for Taiwan as a whole (United Nations Statistical Yearbook, 1969:712-3).

Although not listed in the official government records, a number of chia in the village are combined into several distinct agnatic corporate groups (see Chapter V). Historically, Sanlei was a single surname village but not all the agnatic groups in the village could specify the kinds of relationships they had to each other in detail. However, "all people bearing one surname were by that fact, agnates, for they were considered to be descendants of a common ancestor in the male line" (Freedman, 1958:4). Villagers with the same surname considered themselves to be kinsmen and surname exogamy was absolute. In the last forty years, families with other surnames have been locating in the village. However, the major surname, Liao, is possessed by over fifty per cent of the residents at present.

There are no wealthy families in Sanlei Ts'un although there are substantial differences in life style between the poorest and the richest. There is a direct relationship between family size and relative economic position. Moreover, wealthy individuals are believed to be the most competent and usually, the most virtuous. Most of the formal and informal community leaders are drawn from the wealthier families.

Liao-surnamed families dominate the upper class group in the village. Only two families surnamed Chiu (sharing the same great grandfather) have joined this group. One is a tea processor and the other owns one of the two village stores. Some Chiu female descendants have married Liao men in the village. However, almost every village leader, formal or informal, is surnamed Liao. The only two major exceptions are a Huang who is the stepson of a Liao and who gave up one of his sons to his Liao-surnamed step-brother and a Chien who is an adopted husband in a Liao family.

Every ten or twelve contiguous hu are officially combined into lin (neighborhoods). Each lin has a lin chang (lin head or neighborhood leader) who is selected by consensus. The next larger significant government unit is the li. There is a regular one-man one-vote election for the li chang (mayor) and for a representative to the township council, the next higher level administrative

unit. The various lin chang assist the li chang in carrying out government policy. Connected through this structure are the superordinate government levels such as township, county, province, and ultimately, the Republic.

This account omits one of the most significant units for most residents, the ts'un (village). As a unit of the official government, it has few functions, serving only to bound areas, as a registration unit, and as a postal address. However, the village appears to be a prime identification unit for the typical rural Taiwanese. In the Sanlei area, there is a perfect agreement as to who is and who is not a member of which ts'un. In Taiwan as a whole, in order that li be approximately equal in size, large villages are divided into two or more li; medium-sized villages constitute a li; and small villages are combined to form a single li. Talei Li is an example of the last process, a combination of five ts'un.

Informal political activities vary at distinct levels. At the township level, the li is united as part of a minority faction. Within the li, there are two contrasting sets of factional divisions which cut across each other, i.e., there are some overlapping memberships. One pair of factions is regionally based, T'oulei and Erhlei against the other three villages; the other pair of factions is ideologically based, the young progressives against the older traditionalists. Kinship loyalties,

agnatic and affinal, add another dimension to this complexity for most of the residents are members of families whose forefathers occupied the village over an extended period of time. The effects of alliances or feuds in the past often continue to be important long after the original principals have disappeared from the scene.

Other important governmental or quasi-governmental organizations which influence local affairs include the school and parent teacher's association, police organization, farmers' association, and fruit cooperative. Completely informal units which are important include two temple organizations, various sworn brothers and god's organizations, and several cooperative work groups.

The various kind of social groups discussed above mean that no individual is an isolated unit. He is necessarily involved intimately in a large number of social groups, some in conflict, forcing a choice between alternatives. Although the priorities are not always clear, the general agreement is that the family is usually the most important social group. Most new residents are quickly incorporated into various units. Only a few outsiders such as Mainlanders remain relatively isolated but even Mainlanders can become relatively involved if they behave in accordance with village norms over an extended period of time.

Languages

Sanlei is a multi-lingual community. No one language is sufficient to communicate with everyone although Taiwanese (min-nan hua) comes very close. All village children speak Taiwanese most of the time. In casual conversations, in village affairs, and in religious observances the utilization of Taiwanese is usual. Use of another language is restricted to "special occasions" such as dealing with government officials, but even here, if villager and official are both Taiwanese, employment of Taiwanese is likely. We started with Mandarin but as we learned a little Taiwanese, our efforts in Taiwanese were greatly applauded.

Mandarin is the official language in the schools. Since attendance is compulsory, almost all children are exposed to six years of language training. Several Mainlander teachers in the school refuse to speak Taiwanese at any time and a few know no more than a few polite phrases and do not care to learn any more. Many village women are unable to converse at all with their childrens' teachers. In the li school, only the first grade teacher permits use of any Taiwanese in class.

Several of the older men, especially the more influential ones, but no older women, have learned Mandarin in order to deal with the government and conduct business. Much of the acquired facility in Mandarin will be lost

soon after graduation from grade school unless the graduate works in town. Mandarin and Taiwanese are usually miscalled "Chinese dialects" even though they are not mutually intelligible (Fairbank and Reischauer, 1958:17). Because of the aforementioned Mainlander-Taiwanese antagonism, children do not employ Mandarin outside of school. Mandarin is seemingly equated with Mainlanders. A few people, otherwise quite friendly, would not speak Mandarin with us. They understood for they answered my Mandarin questions in Taiwanese immediately through an interpreter. According to native Mandarin speakers, the Taiwanese have an improper accent when speaking Mandarin. The jokes that are often made about their accents also serve to inhibit attempts at speaking Mandarin.

Japanese is the third most important language in Talei Li. Many men, especially the more influential ones between the ages of 35 and 60, speak Japanese as do a few women in the same age range. One woman who speaks Japanese was a teacher in the Japanese school system. She and her husband are the only two villagers who still speak Japanese regularly together but they are not teaching it to any of their ten children. Men seem proud of their ability in Japanese and were most pleased to display their talents with our assistants.

There are other minor languages spoken in the village. One village woman speaks in addition to Taiwanese

some Taiyal, an aboriginal language. Five villagers speak Hakka. One Mainlander speaks Cantonese and another Hainanese, although both men speak Mandarin as well. Only the Hakka girl who arrived in the village as a bride during our stay spoke absolutely no Taiwanese. She was bilingual in Hakka and Mandarin and her husband, in Taiwanese and Mandarin. Although living in an extended household, she refused to learn any Taiwanese and was unable to converse with her mother-in-law. It does appear that Mandarin is becoming a significant secondary language in spite of some resistance. At present, villagers consider both literacy and fluency in Mandarin as requisite for political office, even on the local level.

Official government figures place the illiteracy rate at 23.1% (China Yearbook, 1967:102) but this is probably greatly underestimated. Everyone in elementary school, even a first grader, is classified as literate while those under six are eliminated as usual. If just the population over 14 is considered, illiteracy exceeds 34%. Moreover, everyone who has completed elementary school (six years) is classified as literate. Functional illiteracy is found in the United States among high school graduates, particularly in the big city ghetto and remote southern rural areas. Chinese is a much more difficult language in which to attain and retain literacy than English (Fairbank and Reischauer, 1958:42). I gave simple

sixth-grade level material to a sample of villagers beyond age twenty who were primary school graduates. Although many were unable to read even half of it, several ran through it very quickly and easily. Functional illiteracy therefore is probably much higher than official figures indicate, particularly in rural areas. Illiteracy is probably also higher among women than among men. Men are more apt to work where continued reading is necessary and this helps to maintain facility. Also, although school attendance is now equal for both sexes, more males than females attended schools in the past.

Clothing

Today, the clothing in Sanlei tends to be predominantly Western in form. Ready-made clothes are purchased in town or from itinerant peddlers. A village seamstress makes others.

A small child wears a kind of jumper, split at the crotch, so that when he squats, the split widens allowing elimination without soiling his clothes. A standard uniform is worn to school: khaki trousers and shirts for boys, skirts and blouses for girls, tennis shoes for both. In warm weather, except for school, most children go barefoot. On the way home from school, children may carry their school bags on one shoulder and tennis shoes slung over the other.

The most common clothing for men is Western cotton wash trousers and a shirt or T-shirt. In warm weather, trousers are usually short. In colder weather, more layers are worn, trousers on trousers and shirts on shirts, to be topped with a sweater or jacket. A man probably owns one dress-up suit which is saved for special occasions and worn with a shirt and tie. The suit lasts for years and was probably acquired for his wedding. Since the jackets last longer than trousers, replacement of the trousers results in unmatched dress-up outfits for older men. Underpants are often very colorful, much like the old flour-sack[8] material in the United States. Undershirts, when worn, are either T-shirts or the jockey type. Pajamas, two piece, are usually worn to bed and also, in the evening after dinner in the leisure period before going to bed. Most of the time, in warm weather, men go barefoot or wear wooden clogs. The Japanese-style clog with the very thick soles are only for leisure in the evening. Occasionally, men wear a high boot with the big toe separated much like a mitten for work in the field. With these boots which were copied from the Japanese, the trousers are bloused. A pair of leather shoes is purchased for a wedding but rarely worn thereafter. A few old men wear a Chinese jacket but old-style Chinese trousers were not observed. Some men wear modern raincoats but most older men prefer the old-fashioned rush mat coat.

A few young men are quite "mod," slim tight trousers, sport shirts in "psychedelic" colors, and leather jackets. Two village boys who dress in this style regularly play a guitar and sing the modern songs in Japanese or Chinese. Modern Japanese songs are very popular and young people learn to sing them by copying records although speaking little Japanese. Village boys are thereby imitating the young sub-culture of urban dwellers in their early twenties.

Women usually wear cotton skirts and blouses. Underneath, they seldom wear slips or brassieres but do wear underpants made of the same previously described "flour-sack" material, in a shape and form not unlike tight peddle-pushers nearly reaching the knees. There is no immodesty attached to exposing underpants. To assume a favorite working position, a woman merely hikes her skirt up to her waist and squats. For work in the fields, women often wear trousers which tuck into split-toe boots, long-sleeved tight-necked blouses, cotton gloves, all topped off with a straw hat fastened by a cloth over the top tied under the chin. This outfit offers protection from thorns, insects, and the effects of the sun. The wide straw hat which provides protection from both the sun and rain is worn often by men and women alike. A few older women wear the traditional Chinese jacket with pantaloons but only very old women wear a <u>chi pao</u> (the

traditional high-necked slit-side dress) of dark coarse material for work. Younger women do have chi pao of fine material which they wear for important affairs. However, in the recent period, a chi pao is usually first acquired for an engagement or wedding. Younger girls usually wear Western-style outfits for trips to town. Women usually carry umbrellas to protect against rain and sun alike. At night, women too wear pajamas but less often than men wear them out on the street in the evening. Footwear is not unlike that for men except that young women more often wear Western-style cheap shoes. Women also are more likely to wear traditional cloth slippers in the home.

Special identifying haircuts are required of students. Men go to the barber about once every two weeks and usually have a shampoo and a shave as well as a haircut. Women in Sanlei very seldom go to a beauty shop although there is a beautician in the Erhlei barber shop. Young women wear makeup now for trips to town although teased by villagers, "You look like a prostititue" (see Glossary C). Parents attempt to control their daughter's dress and behavior but do not have much success. The girls are now earning money and are economic assets. If they are treated too harshly, they can easily move to the city or to a factory dormitory.

Clothing in the village is worn until it falls apart. There are many patches and even patches on patches.

However, when a young woman dresses for town, it would be difficult to distinguish her from her big city sister. Everyone agrees that people are no longer thrifty regarding clothes. Now people "dare to spend money" (see Glossary C).

Dwellings and Community Buildings

There is only one real community building in Sanlei village, the temple which is described more fully in Chapter VII. There are two public stores but these can be little distinguished from the main room in a standard dwelling. The barber shop is merely one room in the barber's house.

The materials used to construct dwelling units are an indication of historical sequence. The original buildings were constructed of bamboo stakes, pounded in the ground, with mud daubed on both sides, and roofs of thatch. Two one-room rude huts in the village still represent this construction method.

The next development was mud brick, plastered on each side, with a thatch roof. More recent has been the substitution of a tile roof. Over a third of the houses in the village are of this style construction. Since the walls are subject to weathering, the house has an economic life of only thirty years and must be replastered every ten years. Many people say these houses are coolest in

summer and warmest in winter. Starting in the late forties, houses have been constructed of fired brick, always with tile roofs. A brick factory is located on the main road just over half-way to Hsin Tien. Fired-brick house types now constitute a majority in the village.

The original floors in all the house types described above are pounded earth but cement floors are now being added. The first room to be floored is either the kung t'ing (main room) or kitchen. Bedrooms still are seldom other than pounded earth.

Under the stimulation of the government, a new style house is being built entirely of reinforced concrete: floor, walls, and roof. The government requires use of one of three stock plans. The houses are designed to eventually become row houses with a common wall, i.e., reinforcing rods protrude in appropriate places. Additionally, each house is designed to eventually reach three stories, each preceding roof becoming a floor. If someone builds a house as specified by the government, he can obtain a low-interest house loan. This stimulation has resulted in the construction of three recent houses in Sanlei. The advantages of the house style which include the natural cleanliness of all cement floors, long economic life, and relative resistance to typhoons must be balanced against the disadvantages of a pervasive dampness and chill

in winter.

Most of the dwellings of farmers have a pounded earth courtyard for drying rice and as a place to work. Recently, the farmers' association has provided half the cement necessary to cover the courtyard and many villagers have taken advantage of the offer, the first in 1961. Borrowing the use of a cemented courtyard is now quite common. Farm outbuildings such as pig pens are extremely crude with only partial walls and a thatch roof.

A dwelling typically has a regular sequence of development. The first step is a rectangle 15 feet deep and 20 or more feet wide. The main room will be the kung t'ing which is a combination of sitting, dining, ancestral worship, and general main room in the house. The usual room dimensions are a 15 foot depth and a width of 10 or 15 feet. Extended out on either side are other rooms, each 10 or 15 feet wide. Such rooms will be added as needed until the building is three or five rooms long with the kung t'ing in the center accessed through a central door. One of the rooms is a kitchen but if there are only two rooms, the kitchen may be a temporary attached leanto.

It is best to have a geomancer orient the house for good luck (see Chapter VII). Many people skip this step by copying the orientation of nearby houses although this is contrary to the theory of geomancy (ti-li or feng-shui).

Several villagers have some knowledge of ti-li standards which are considered sufficient for houses but a professional geomancer is usually consulted to orient the stove. Normally, geomancy is referred to as feng shui (literally, wind and water) with respect to orienting graves. Ti-li is an alternative expression which refers to the activities of the same man (geomancer) when he is engaged in activities not related to death. There is some reluctance to connect the stove, for instance, with death. Nevertheless, both terms are sometimes used for the stove or house but only feng-shui is used for graves or temples.

As more space is needed in the house, ten-foot wings are extended at right angles from each end of the main section on the side of the building with the kung t'ing door. Each added room is about 10' by 10'. The wings may eventually become five or six rooms long. The long-range aim is a "u-shaped" building with a courtyard in the central partially enclosed area. Several village dwelling units have reached this stage (One is illustrated in Figure 12). Others may assume the shape of an "L" before the last wing is added (A distribution of various shapes can easily be seen in Figure 2). Since the large "u-shaped" building is predicated on the basis it will be occupied by a single kinship group, many buildings never complete the full development cycle as families do not expand as expected. The most modern houses of concrete,

described above, do not permit this pattern of development while other village houses just deviate from the dominant pattern.

All but three village houses have electricity. Most houses have one outlet in each room while those with fewer outlets, maintain one in the kitchen and kung t'ing. One light is usually left burning all night in each house.

In order to indicate the kind and extent of household furnishings, a dwelling at the intermediate stage of development is indicated in Figure 4, i.e., the kung t'ing base of a planned "u" only is complete. In this household, fourteen people reside in a stem family consisting of a man and his wife, their son and his wife, and ten grandchildren. Their goal is expansion of the house into the previously described pattern as the descendants marry. Four of the grandchildren are male.

The house also reveals other typical patterns. Alternating rooms have an outside entrance and each room may be reached from any other without going outside. Although separate out-houses were common in the past, there is now a tendency to have a small attached room with a Japanese ceramic toilet inside. In this case, human waste is discharged into a concrete pit which can be reached through a manhole outside. A house will also have an internal bucket collection system because most people do not like to go out at night.

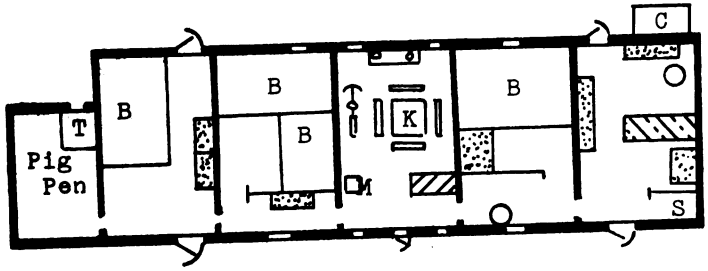

S - Shower
T - Toilet
- Closet or Shelf
B - Bed
- Kitchen Stove
C - Chicken Coop
- Desk
K - Immortal's Table and Benches
- Ancestral Table
M - Sewing Machine

Figure 4. Typical Sanlei House Plan with Furnishings

A small room with a hard surface or wooden floor for baths is often found in the kitchen although a kind of dishpan in the kitchen is also often used. Mixed bathing, Japanese style, is not uncommon but is not typical either and only occurs within a single family. Young to middle-aged husbands and wives sometimes bathe together while completely disrobed, occasionally with very small children. Older women often bathe with small children. However, there is seldom mixed bathing after age ten except for the aforementioned married couples.

Most houses are very dirty and cluttered as a cluttered house is a sign of wealth. Chickens and ducks leave droppings as they wander in and out, sometimes accompanied by small pigs.

The plans of the above house also reveal a final pattern. A single dwelling may contain many households. As family division occurs, maximum flexibility in room assignment can be achieved because many rooms have an external entrance. Since there is no plumbing, any room can easily become a kitchen. In spite of division, internal doors will seldom be blocked off unless a portion of the building is rented out to someone who is not a relative although this is relatively rare, only two cases in Sanlei village. There will seldom be more than one kung t'ing in a single dwelling unit. Internal bearing walls, those marking the regular ten and fifteen foot dimensions, are heavy and extend from floor to ceiling. Other internal walls are plywood, about six feet high, commencing one foot off the ground. The room arrangements tend to allow little real privacy but do promote circulation of air in hot weather.

Personal Property

In addition to the above, it seems worthwhile to cite a few figures with reference to material possessions to indicate the economic prosperity of the village. The use of certain key items as an economic index is a normal technique in assessing prosperity. For example, the United Nations Statistical Yearbook indicates that the number of radios in Taiwan increased from 77,000 in 1953 to

1,402,000 in 1967 (1969:782) and television sets, from 16,000 in 1963 to 164,000 in 1967 (1969:784). Figures for Sanlei indicate the village has shared this growth pattern. The number of radios increased from less than a dozen in 1953 to 41 in 1966. Two out of every three households now have a radio and since radios are played loudly, the village is rarely silent during the day or evening. Two television sets were installed in 1965. The one at the village store faces the street so that a group of villagers can watch the programs.

Other items may also indicate both the level of prosperity and the kind of economic activities. Among the 409 people (66 households) there are 5 motorcycles, 69 bicycles, 30 sewing machines, 55 clocks, 37 electric fans, and 15 electric rice steamers. Farming equipment includes 9 threshing machines, 18 plows, 7 winnowers, 39 insecticide sprayers, 8 hand harrows, 7 foot harrows, and 161 hoes. Since almost everyone is a part-time farmer, there are only about five households in the village without a hoe although a hoe is the only piece of farm equipment owned in several households. Borrowing tools from relatives, friends, and sworn brothers is a regular custom.

Every household appears overcrowded with furniture, tables, benches, chairs, cabinets, etc. Beds usually consist of a straw mat or a <u>tatami</u> (hard thin straw mattress) on a wooden platform. Some beds are quite large; occasionally, a single bed may exceed 8' by 10'.

There is little doubt that the villages appear quite prosperous and people are not afraid to spend money.

Health and Sanitation

As stated previously, there has been a tremendous decrease in the death rate. No small part of this decrease is due to improved health care, both personal care and public health facilities. With the help of the J.C.R.R. (Joint Commission on Rural Reconstruction), a health station serving the village has been established in Hsin Tien. This station provides assistance in pregnancy and birth control as well as some treatment of disease and injury. It will also provide and insert Intrauterine Devices (I.U.D.) at a cost of $30.00, a day's pay for a woman. However, Sanlei village women prefer a private hospital, also in Hsin Tien, which charges $120.00. The latter center provides more privacy and personal attention and also guarantees to refund the fee if there is rejection of the device or provide treatment without charge in the event of bleeding.

There are also educational programs to stimulate intensive village health and sanitation practices. However, sanitation techniques in the village are not always in accord with knowledge. For example, all village adults know that the water should be boiled for ten minutes before drinking it. However, although almost no one drinks

plain water, few boil it the full ten minutes. There is no question about what is proper but people just do not want to take the time or trouble and a few say that it would cost too much for the fuel to boil all drinking water a full ten minutes. Similarly, mosquito nets are not kept in good repair although infected bites are common.

Houses are quite messy and dirty. People will clean them as required to pass government inspection, but grudgingly. There are two values operating against cleanliness. A cluttered house is a sign of wealth or economic wellbeing. Also, a baby god is thought to hide somewhere in the room of a pregnant woman during the period from conception to birth. Disturbing his resting place may have serious detrimental effects on the baby. Since a woman is not likely to know the moment she becomes pregnant, the bedrooms are often neglected in cleaning. The fastidious Japanese also worked hard in Talei Li at promoting clean houses with little success.

Food handling techniques are comparatively good. No raw foods other than fruits with a thick skin such as citrus or bananas are consumed. Almost every family now covers left-over foods with a round wooden basket with a screened top to keep out insects in accordance with suggestions of the farmers' association and government health agents. This is a new practice instituted during the last

eight years. Although farmers have been relatively willing to accept the recommendations of agricultural experts, the government agents and farmers' association officials concerned with sanitation have had more success with women than men. Male and female agents in the farmers' association in Hsin Tien both agree that unless the woman is persuaded, few changes will be made in the kitchen. The officials and villagers alike claimed that no matter what a man said, a woman ran the kitchen as she pleased. Most food is eaten the day it is acquired and pork especially, is never kept overnight. This custom requires daily marketing.

Colds and flu are very common in winter. Almost everyone has periodic intestinal disorders and skin infections are endemic. Foot and hand infections are occasionally very severe. Working in the paddy fields with their load of human excreta in solution is particularly dangerous with open cuts. Injuries such as broken bones are most common among children and men who work in the local coal mines.

Treatment of disease and injury may involve many distinct techniques. There are a great variety of professional medical practitioners such as Western-style doctors, traditional Chinese doctors, various folk specialties such as acupuncture, different shamans, and temple priests who furnish charms to drink. Most professionals are males but

midwives are invariably females.

In addition to the professionals, there are local village amateurs. I cut my bare foot on a piece of bamboo in a rice paddy and it became badly infected. Two old villagers, an unrelated male and female, collected certain grasses in the mountain, chewed them thoroughly to make a soft wet lump which they applied to the cut as a poultice. The wound healed very quickly. Old age seems to be a prime characteristic of local medical specialists (non-professional) who are consulted regularly as experts.

Certain diseases and injuries are considered best treated by particular kinds of practitioners. There is considerable agreement on diagnosing and recommended treatment in the village. For example, a Chinese herb doctor is Hsin Tien is best for a broken bone and a Western doctor, for eye infections.

In addition to technical treatment, religious worship and sacrifices are regularly added. If one practitioner of a certain type is not immediately successful, transfer to a different type is quickly effected. On many occasions, people will go to two or three different types at once for it is felt best not to take chances.

Self diagnosis and treatment is common. Although several older people in Talei Li are considered to have special medical abilities, most adults are amateur health practitioners. Itinerant salesmen leave bags containing

a variety of different traditional and modern medicines hanging on the walls in houses. People use what they desire and when the salesman returns he replaces missing items and charges for them although there is no charge if none have been used. Different salesmen provide different combinations of drugs. There are 134 such medicine bags distributed among 59 of the 66 village households.

Health care has greatly improved in recent years. People go to a doctor much more often than previously. A contributing stimulus is the care received by miners and their families under health insurance programs. A Western-style doctor, a Mainland army officer, started a part-time practice in a rented room in Erhlei two months before we left Taiwan. Sanlei has a mid-wife responsible for most births. However, in the past five years, a few women in the village have traveled to the hospital in Hsin Tien after the onset of labor, usually returning about four hours after birth. Births in a hospital are common among the women living in Erhlei. The half-hour ride on the bouncing bus with a laboring woman is sometimes most exciting, especially if she has already given birth to several children. On more than one occasion, a woman in labor has gotten on the bus and had the baby during the one hour round trip without ever getting off.

The final factor contributing to improved health and longer life is diet. Fish and pork consumption is at

the highest level in history. Low-priced powdered milk is available in the village stores but only given to small children. The citrus orchards allow a large consumption of fruits in season, particularly rejects, i.e., bruised and undersized fruit. The appearance and taste may be poor but nourishment remains the same. Previously, fresh fruits were consumed only on special occasions. The village stores now sell many eggs although eggs too once were only for rare special occasions. Probably the biggest change is in the quantity and variety of fresh vegetables. The diet is greatly improved and information about vitamins and a balanced diet is filtering into the community.

Food and Diet

No villager goes hungry, starvation is non-existent. Even in the large cities, the people appear well fed and beggars are rarely encountered. In Sanlei, the daily calorie intake seemed adequate for healthy life. In spite of the villagers' opinions which were expressed above, it does appear that there is an imbalance in the distribution of needed items. According to the Western-style doctor at the public health station in Hsin Tien, the rural villagers in the Hsin Tien area probably have serious shortages of protein, riboflavin, calcium, and thiamin. As an investigator from America, I was most struck by the lack of milk and milk products plus the comparatively small

portions of meat, fish and eggs. The doctor also stated that there were probably insufficient quantities of niacin, vitamin A, and iron although not as serious as the first listed items. Finally, outside of the citrus season, there were shortages of ascorbic acid.

The daily pattern of eating was checked in a number of different ways. I had five cooperating households (a stratified sample) keep records of food for a month which we checked each evening. Food was richer the first few days, probably indicating a "face saving" process. A second method was to check all 66 households on a single evening for that day's consumption. Alternatively, houses were checked following a single meal. Finally, random interviews on any subject periodically noted the food being prepared or recently consumed.

Polished rice was the main item of the diet in about 45% of the households; a combination of rice and sweet potatoes in about 52%; and primarily sweet potatoes only in about 3%. All households eat sweet potatoes, as a kind of fried pancake, steamed, or as a type of mush. According to villagers, the trend over time has been towards a greater emphasis on rice and a lesser emphasis on sweet potatoes. Rice, if available, is eaten at every meal, hot, cold, or as hsi-fan (a thin gruel). All villagers agree that gruel should not be eaten in the morning by any man who must do hard work in the fields as it

is not sufficiently nourishing; also, it should be denied to small children along with other liquids in the evening in order to prevent bed wetting. Rice was usually steamed or boiled; it was only fried for a dish at a banquet or when mixed with left-overs for lunch.

Almost every meal also included liberal quantities of vegetables which were lightly cooked and were usually placed on top of the rice to eat. The particular vegetables were drawn from those that were in season. Although many of them were grown in the village, others were purchased in Hsin Tien. Men were asked to shop on the way home from work or a trip to town. If a woman went to town, she usually shopped for herself and several others. One village man drove his three-wheeled bicycle cart into the Taipei market each morning about 3:30 a.m. and bought a load of vegetables and pedaled home. After he left Hsin Tien, he stopped in each small village or group of houses other than the two villages with vegetable markets and sold produce from the cart. As he got closer to Sanlei, he lowered his prices. He almost always was able to completely sell out the last of his load in Sanlei. Villagers generally felt that there had not been significant changes in the absolute quantity of vegetables consumed, but there had been great changes in the variety used and that people now ate more out-of-season and fresh vegetables. This was probably true but it seemed to us that

there was an emphasis on seasonal foods to the point of monotony. For example, during the six-week period when cauliflower was lowest in price, it seemed to be part of two meals each day in almost every household in Talei Li.

A young man on his bicycle cart came through each evening selling a great variety of pickled and spicy vegetables which were usually served on cold rice for breakfast. On a typical evening, about half of the households in Sanlei made purchases from this traveling delicatessen. The boy said his business had more than tripled in the past six or seven years over the same territory which extended from Hsin Tien to Wulei.

The chu jen (pig man) as he was nicknamed, came through on a motorized cart three times each week, Tuesday, Thursday, and Friday. He sold to fu (soy bean curd) for human consumption and soy bean cakes for pigs. He was a commercial pig farmer with a herd of over fifty pigs near Hsin Tien. He had another route out a different road from Hsin Tien on the other three days each week. With his large orders for soy bean, he could get a large discount, reducing his own farming expenses. It was also possible to order a piglet from him at a price lower than the Hsin Tien market. He sold about 2 pig cakes and 10 pounds of to fu each trip into Sanlei. The prices of both were a little higher than the market but he offered convenience. To fu is rich in protein and a reasonable substitute for

meat but the quantity eaten was not sufficient to meet the protein shortages previously described. However, consumption of to fu was higher than it would have been without his route because many purchases were made on impulse. Further, he often advised farmers with regard to the techniques of raising pigs as he was an acknowledged expert.

The many other different kinds of salesmen that came through the village were all tapped for gossip and information and they played an important part in the communication network. The salesmen who included Sanlei on a regular route usually lived in Hsin Tien or Taipei. Some called on the two village stores and others on villagers. They sold groceries, medicine bags, agricultural implements, cloth, etc. A more marginal group came through on a one-time basis. The latter were high-pressure types and villagers seldom had any further contact with them. Many of the salesmen were retired Mainland soldiers.

As an island, seafood is an important dietary item in Taiwan. Various kinds of seafood and fish soups are common items in Fukienese culinary arts. Fish, shrimp, sea slugs, octopus, and squid are all used, both fresh and dried. Yet, these items are not a daily part of any household's diet, appearing on the table about five or six times each month on the average.

Pork is the typical meat. However, even counting banquet meals, the average consumption of meat was less

than one-quarter of a pound per man per day. It is a rare village household that would have two meatless days in a row. Some older villagers claimed that in their youth, meat appeared on the table only once each week but others claimed it was more often. Any question about economic conditions in the past almost always produced mild arguments and disagreements. Pork is cut in very small pieces and mixed with vegetables in cooking and most often, seems to be used primarily for flavoring and for the fat. Villagers agreed that a person needed meat regularly in order to provide grease for the joints in order to prevent sore muscles. It was said that beef (water buffalo or yellow oxen) was eaten in the city. However, the water buffalo was so important to the villagers that no village man could bring himself to eat it. However, when one was killed in an accident, it would be sold to a meat store. Small boys occasionally snared mountain rats which were eaten but the house rat was considered too dirty to eat. Dog meat was quite expensive and rarely eaten although everyone said that a bit of dog meat in the fall would help prevent colds all winter. No village dog could be eaten however. Fowl were also significant but only on the special occasions averaging about three to five times per month.

According to most Chinese, eating is one of the joys of life and cooking is a well-developed art form.

Most village women are proud of their abilities as cooks. Several village men are also extremely skilled, hiring out as cooks on special occasions and almost every village man can prepare an adequate meal. Some men cook quite often in their homes although their wives were considered the regular cooks. When a woman is working for wages on a job while the man is home early, he will often prepare dinner. Also, if a wife is sick, a man will substitute in the kitchen if there is no other adult female kinsman in the household. There are only a few men who have never substituted as cooks for their wives. Nevertheless, when a man cooks for either special occasions or as a substitute, women will almost always clean the kitchen and wash the dishes.

Peanut oil, ginger, soy sauce, red sauce, and monosodium glutamate are important items in cooking. Most dishes are combinations of various ingredients and spices. It is often jokingly stated that no Chinese dish is composed of less than ten items. Cooking techniques include sauteing, deep frying, and steaming. Of course, boiling is important for soups.

Water can not be consumed without boiling it first. Since Sanlei was a tea processing village, tea usually replaces plain boiled water. However, the tea is usually very weak and of poorer grades; a single set of tea leaves was reused several times. Wine or beer is for special occasions only although there are a couple of men in the

area who drink often. Spirits were never supposed to be consumed without simultaneously eating. The village stores also stock soft drinks but these too tend to be reserved for special occasions. Soft drinks and spirits are provided at all banquets.

There were two kinds of days, sharply contrasted in the kinds and quantities of food: regular days and special days. The special days were the religious holidays and special life crises events, i.e., marriage, engagement, funeral, certain birthdays, etc. One set of religious holidays occurred twice each month on the lunar calendar (see Chapter VIII). The other holidays were on regular dates, rarely less than at least one each month. On special days the food was rich, dinner usually including pork, fish, and fowl, whereas the diet previously described was for regular days.

On special days, there was a tendency for people to eat dinner together at a table. Often, eating had to be in shifts for few households had more than one table while some families were quite large (see Chapter V). Most of the time, eating is during a single time period but in a haphazard fashion. Each person gets food in the kitchen from the cook and eats at the table or perhaps, out in the courtyard. Men are supposed to eat first, but it appears that small children are usually first. While most meals are eaten at home, lunch is occasionally eaten in the

fields, especially if the field is quite distant or the activity is a particularly demanding one such as harvesting or transplanting. The food may be carried in a tin or may be brought to the workers by a woman or a child.

Everyone agrees that the diet now is the best and richest in village history, both daily and especially for the Pai Pai (religious festivals, see Chapter VIII) on special days. It is often remarked by villagers and professional economist alike that one of the first things a Chinese peasant will do with increased income is improve his diet. "Engel's Law" states that in a subsistance economy, over half of the income will be spent on food. It does seem that Sanlei figures are still close to this percentage of income spent on food. It also appears that the non-agricultural workers have a better and richer diet than the farmers, although their net worth is much less. The poorest diets are in households which do not include a vigorous young to middle-aged man. The only exception is the rich tea processor who farms by hiring labor. The poorer householders do obtain better food than their financial condition might warrant by the village custom of inviting guests on special days. There is no expectation that a poor man will invite a rich man to dinner. Conversely, a rich man should invite a poor man to eat. The poorer households benefit by the fact that one way a rich man earns prestige is in accordance with the number of guests he serves at a banquet.

CHAPTER III

THE ECONOMIC BASE

Economically, Sanlei Village is first of all a farming community. Although there are other significant sources contributing to community income, a vast majority of the households earn all or a significant segment of their income from agricultural activities. Only five of the sixty-six households have no direct involvement in agriculture.

There are four commercially significant agricultural products in the Sanlei area: rice, tea, oranges, and wood. Although a large portion of the rice and wood production is for family consumption within the village, the major share of the four products is produced for the market. The market is a primary external force impinging on village activities. To participate effectively in the market, villagers are forced to establish and maintain extra-village social relationships.

Land and Land Tenure

All the land within the village boundaries of Sanlei has been classified and graded by the government. The

amount of annual taxes varies considerably according to the classification and grade and various government land reform acts affected only certain categories of land. The most important and valuable kind of land is that classified as paddy field, most of it grade 12 or 13. The grade number assigned reflects productivity and consequently taxes, the higher the number, the lower the value. The current market price is $180,000.00 per chia, nearly $1,900.00 U.S. per acre.

As pointed out in the section on topography, Sanlei is in a narrow valley between two small mountain chains. The only paddy land is on the terraced steps which comprise the valley floor between the sharply rising foothills. Paddy land totals only 13.2920 chia (see Table 3), less than 32 acres. This is divided into 200 plots ranging in size from .0002 chia to .4716 chia. The mean size is .0665 chia (.16 acres), but this figure does not faithfully portray the real situation for the mean has been increased by a few larger plots. The median figure of .0350 (.08 acres) indicates that fifty per cent of the plots are less than half the mean. This extreme case of land fragmentation is partially due to a historical accident and partially due to the normal Chinese inheritance pattern.

As previously stated, Sanlei was founded around 1830 by 18 hu (households) from the same community in

Table 3. Sanlei Land Types and Distribution
*In chia (One chia equals 2.39 acres)

Land Category	Number of Plots	Median Size*	Mean Size*	Area Total*
Paddy	200	.0350	.0665	13.2920
Dry	124	.0435	.1698	21.0568
Woods	103	.1440	.2936	30.2435
House	61	.0185	.0228	1.5066
Burial	17	.0230	.1629	2.7685
Other	34	.0238	.0564	1.9188
			TOTAL	70.7862

Fukien. According to informants and confirmed by family histories, the original land was improved and brought into cultivation by the 18 hu acting as a corporate group. The earliest settlement was a walled fort, frequently under attack by the aborigines who inhabited the nearby mountains. While some men worked in the fields, others were detailed as lookouts and guards. The lands were owned jointly and produce was shared communally. After a few short years (the exact date is uncertain), a decision was made to divide the land. There are suggestions that this was the original plan but there are also strong hints that the division process was one that caused considerable discord and may have been the outgrowth of a previous conflict. In any case, each large piece of land, by type and location, was divided into 18 equal plots, one for each household. The matching of household to plot was accomplished by withdrawing a slip of paper from a hat with chopsticks. Since there were several original large plots,

each household received a number of one-eighteenth sections. Subsequent to the division, some households continued developing land, creating additional plots more remote from the village center. Additional households migrated in and others died off. Some plots were purchased and others were developed. This historical pattern meant the villagers had started with smaller than average plot sizes.

The traditional Chinese pattern of equal inheritance by all the sons compounded the problem. In practice, equal inheritance often meant that if a man had four sons and four plots of land, each son obtained one-fourth of each plot. Conceivably, each son could have received one of the four plots, but plots regularly vary in quality and convenience to the village center and it usually proved impossible to find four that were equal.

There were counter-trends to the fragmentation. An individual might inherit two neighboring pieces from father and uncle or he might buy a piece neighboring his own. There was some consolidation by trading. Men who owned two small adjacent plots in two different locations could trade one plot in order to own two in only one location. This occurred but was infrequent because of the necessity for establishing equality. The only such consolidation that took place during our stay in the village, involved a trade of a slightly more valuable .008 chia

piece for a .009 chia piece plus a sum of cash, and was the culmination of a two-year negotiation process.

The registered plot sizes are not directly related to the size of the paddy fields. Larger plots may be divided into two or more fields and some smaller plots are combined into one field. Both the extreme fragmentation and the narrowness of the terraces contribute to the small size of paddies. Correlated with the small size is the complete absence of gasoline-powered cultivators which have become so popular on the plains. This degree of fragmentation does not permit the most efficient use of the land. The government has begun a program of land consolidation in other parts of the island (Department of Information, Taiwan Provincial Government, 1962:78-83). Although villagers are aware of the program and believe it would be a valuable step for the village, everyone fears he would not get a reasonable share in a government-ordered consolidation, i.e., he would give up pieces more valuable than he would receive. Although theoretically the process should be seen as a zero-sum game, no villager can be found who thinks he would be a winner or even break even.

Prior to the above-discussed land consolidation, Taiwan underwent an extensive land reform program which proceeded through three steps. The first step was rent reduction, enforced in April of 1949, which limited farm

rent to a maximum of 37.5 per cent of the total main crop yield (C. Chen, 1961). Since the usual rent in the Sanlei area averaged about fifty per cent of the main crop, this reduction immediately affected the economic situation of village tenants. It had a secondary effect of reducing the land value of tenanted land because the rental income was lowered and flexibility was lost due to the requirements for a minimum lease of six years, binding on heirs, successors, and assigns.

The second step involved the sale of public land in a series of six successive sales between 1948 and 1958 (Koo, 1968:36) with most plots sold after 1951 (Koo, 1968: 35). There was no paddy land affected by these sales in Sanlei although some villagers did acquire mountain land in the various sales. According to villagers and by notation on land records, the sale of mountain land to tenants in Sanlei had actually begun under the Japanese.

The third step was the Land-to-the-Tiller Act of 1953 which was designed to accomplish three basic objectives:

> (1) to help tenants acquire landownership without increasing financial burden; (2) to protect the interests of landlords; and (3) to convert landholdings into industrial holdings (Koo, 1968:37).

In essence, land was compulsorily purchased from certain landlords and sold on easy terms to their tenants. The

property subject to forced sale included a landlord's excess over 3.0 chia, land owned jointly, and land owned by a lineage or temple (C. Chen, 1961). This too had little effect in Sanlei because the village never had high rates of tenancy. It is estimated that 75% of the paddy land was owner-cultivated before the land reform program. As described above, much of Sanlei land is not of high quality. Traditionally, there has been a higher percentage of owner-operated fields where most land is low quality (Kirby, 1960:70). In the Land-to-the-Tiller program, only 15 Sanlei paddy plots totaling 1.0175 chia, less than 8% of the paddy land, changed hands. Three of these plots were part of one man's excess holdings over 3.0 chia and one was owned by a temple. The remaining plots were lost because a tenant was renting land held by joint owners.

There were no large land-holdings in the area immediately around Sanlei but large holdings were common closer to Hsin Tien where land grades of 6 or 7 are common. One landlord who owned 30 chia of paddy fields lived in T'oulei but only a small portion of his holdings were located in Talei Li.

A typical case to illustrate a transfer (forced sale) was that of Liao Mou-tu and Liao Mou-ti, two of the wealthier villagers (Liao Mou-tu's chia is diagramed in Figure 5). These two men were brothers whose household had divided but subsequently, had jointly purchased .05

chia of paddy land two years prior to the Land-to-the-Tiller act. Due to its location, they let it out to a tenant and, in turn, rented as tenants an equivalent piece adjacent to their respective main holdings. They lost the purchased piece to the tenant but were unable to claim the rented equivalent piece since it was owned by a small landlord, one with less than 3.0 chia. There were several similar cases in the li. Often there was bitterness generated in the exchanges for the landlord-tenants were sometimes ch'in t'ang (agnatic relatives by virtue of possessing the same surname) and even ch'in tsu (agnatic relatives with demonstrated descent).

The second most important category was dry land which was quite fragmented but less so than paddy land. The total of 21.0568 chia is divided into 124 plots for a mean size of .1698 chia. The range is from .0003 chia to 2.5435 chia. The medium of .0435 chia once again indicates most plots are considerably smaller than the mean. This land is devoted primarily to tea, oranges, sweet potatoes and miscellaneous vegetables. The biggest plot, 2.5435 chia, is a single tea farm cultivated by hired labor but owned by a Sanlei villager. Dry land typically is grade 19, less valuable than paddy fields.

The third and largest category is mountain or wooded land, 30.2435 chia. Some of this has been left in

natural vegetation and forestation but much is being developed. A considerable quantity of the mountain land in Sanlei and also outside village boundaries is owned by the government. Some has been purchased by villagers for the government is encouraging its development. Prior to 1962, it was leased by the government for 25% of the main crop but now, rent is fixed and reasonable, on long-term leases at $380.00 per chia per year. The current price of mountain land is about $20,000.00 per chia if undeveloped and ranging up to $100,000.00 per chia if planted with excellent crops such as mature fruit trees.

The remaining categories are important but not economically significant. Houseland land is that on which the house is built but also includes the very small vegetable gardens adjacent to the houses. Vegetable gardens are located near the house so as to be convenient for the deposit of night soil. Burial land takes up a considerable part of the community. As previously stated, this area has many good feng shui locations, most of them on steep slopes. Other types of land categories include temple, roads, and worthless plots.

The vast majority of the land in Sanlei remains either owner-cultivated or leased from the government. Moreover, the owner-cultivators tend to live in Sanlei or an adjacent village. Some tenants are renting from a fellow villager as illustrated by the neighbor who leases

.17 chia of paddy field from the barber. The absentee landlord is relatively rare, often a former villager who migrated to the city.

Sanlei villagers also own land outside the village but we were only permitted to check official records inside the village boundaries of Sanlei and Erhlei. It is difficult to obtain accurate figures through interviews since there is a fear of tax increases. As a result, the disparity between villagers' reports and official holdings was striking. Records of outside holdings kept being refined all during the study by following men to work in the fields. People would reveal more about their neighbors' holdings than their own.

Some of the categories and grades are inaccurately recorded on official records. No piece is overgraded because the township land official is contacted to report losses, i.e., caused by erosion, in order to have the taxes reduced. On the other hand, improved land is not called to the attention of officials. Some of the dry land is really paddy land and some of the mountain land is now dry land with orange orchards or tea fields. Over a four year period there was a Joint Commission for Rural Reconstruction (J.C.R.R.) and farmers' association sponsored soil conservation program for mountain land. When a farmer constructed proper terracing, he was rewarded with United States surplus flour. Only about 60% of the mountain-land

owners participated because of a fear the improved land would be given a higher grade resulting in increased taxes. Although reassessment has still not occurred, non-participants keep saying it soon will.

Irrigation

Rainfall in northern Taiwan is reasonably adequate every month of the year. There are small mountains running parallel to the village on each side with a small stream down the middle. The mountains produce a considerable water run-off which is channeled to the paddy fields where needed. Only about once every seven or eight years is there a serious shortage of water but there are slight shortages yearly in June and July. There are no water irrigation associations because there is so much surplus water and so many places that it can be tapped, that the small short channels are maintained informally by farmers in the few fields using each source. Only once in fifteen months did we observe a conflict over water levels in spite of these extremely informal arrangements. However, children get in trouble when they play in the fields and break down the barriers and let water fall below requisite levels.

Rice

Paddy fields are considered to be the most valuable kind of agricultural land. From the earliest inception of

the village, the flat land has been largely devoted to irrigated fields for the cultivation of rice. As specified above, the available water from the mountainsides has always permitted irrigation with a minimum of effort. Sanlei is a double-cropping area, most paddy fields having two crops of rice each year with the occasional substitution of sweet potatoes for rice. In the last ten to fifteen years, there has been the inauguration of a third crop of vegetables in the paddy fields for about half of the fields while the other half stands idle.

There are two major varieties of rice, the native tsai lai and the p'eng lai[1] which was introduced by the Japanese. P'eng lai has a much higher yield, brings a better market price, and especially important today, is much more responsive in yield increase to applications of fertilizer. However, it is somewhat less resistant to weather, insects, and disease, the latter two especially significant for the second crop. According to local informants, p'eng lai requires rich and deep soil. Since the good soil in Sanlei is about four to six inches deep, insufficient for p'eng lai, experiments with p'eng lai have often proved disastrous and today, only two or three farmers plant it and only in fields closest to the bottom of the valley, next to the river. As a result, tsai lai is the major form grown in Talei Li.

In the middle of December (Solar Calendar),[2] after three days soaking, rice seeds for the first crop are scattered thickly on a well-prepared fertilized field. They take forty to fifty days to grow to a sufficient size for transplanting. In the latter part of January, the field is prepared. It takes one man with a water buffalo about six or seven days to prepare a one chia field. While there are only two water buffalo in Sanlei village, a nearby village specializes in water buffalo. A man with equipment and buffalo can be hired for $120.00 per day or the buffalo alone may be rented for $60.00 to $70.00 per day. If human fertilizer (night soil) is used, a liberal quantity should now be applied.

Transplanting is a hard job, rated as work primarily but not exclusively for men as is the other most difficult job of harvesting. All extremely hard work is considered proper for men only but there is no corresponding notion that light work should be reserved for females. At times, men are doing light work while females are doing medium heavy work. There is a bonus of five meals per day for male or female workers alike when engaged in transplanting or harvesting rice, the two jobs rated as the hardest in the community. It would take a seven to eight man crew to transplant a single chia of paddy field. However, given the small size of the fields, most work groups rarely exceed three or four adult males. The planting by

hand is in bunches of 4 to 7 rice seedlings, 6 to 7 inches apart with one large bunch placed in a corner of the field for use in a second transplanting to replace thinned-out spots in the field. Men are expected to be able to maintain the rows and spacing without the wooden guides needed by women. A woman occasionally transplants rice in her own family fields but it is comparatively rare for women to be hired for transplanting. When a woman is hired for transplanting or harvesting, she earns a regular women's wage (discussed later) but does receive the previously mentioned five-meal bonus. A young boy is a normal part of each transplanting crew with the responsibility of running errands, bringing food and water, and supplying the men with seedlings.

There are normally two weedings and occasionally a third; the first is 20-25 days after transplanting and the second and third, 10-15 days after a previous weeding. Chemical fertilizer is applied before weeding. Weeding is performed on hands and knees. Once more, women seldom participate in rice-field activities outside their own family fields and that too is infrequent. There may be an occasional second application of fertilizer which is available from the farmers' association for cash or for rice. It is slightly cheaper in town for cash but no credit facilities are available. The fields will be sprayed with insecticide once or twice.

Under the best conditions, it is 110 days from transplanting to harvest although this period may range up to 130 days dependent on weather and the particular sub-variety of tsai lai rice used. Harvesting activities cover the latter part of the May through the early part of June. The usual work crew of five or six men take nearly four days to harvest a chia of land. The rice is threshed in a rotary foot-pedal machine, several of which are owned in the area, and then carried in baskets to the house court-yard where it takes three or four days in the sun to dry. The mounds of rice must be regularly turned so that all parts will be exposed to the sun. Women and children usually do the necessary raking but invariably, a man makes the decision when the crop is sufficiently dry. One chia of land produces about 6,000 chin (8,000 pounds) for the first crop. The rice straw is bundled and used for compost or sometimes sold to brokers from the city. For the first crop, due to the shortage of labor and great press of time, much of it is plowed under to enrich the soil.

In the meantime, the second crop activities start long before the first crop is harvested. The seeds are cast in the second seedbed in a manner similar to the first at the end of April or early in May. However, given the warmer weather, they only take about 30 to 40 days to be ready for transplanting and only about half as much seed

is needed, about 50 chin per chia.

The period commencing with the harvest of the first crop and ending with completion of transplanting the second is the busiest of the year. It takes a considerable number of people to harvest. By design, not all land is ready for harvesting at once, because the first crop transplanting is somewhat staggered; sub-varieties mature at different rates; and finally, the land closest to the river and road gets more heat and matures quicker than that closest to the mountains. Contributing to the shortage of labor during this period is the need to prepare the field for the second crop and transplanting. It is desired to complete transplanting in a field within ten days after it is harvested but this is difficult to accomplish. The modal time is 15 days with anything beyond 20 days considered a small disaster.

It is during the above one month period that women are most often to be observed working in the rice fields. In spite of strong sentiment to restrict work on rice to men only, the shortage of labor requires letting women share activities but only as a last resort. Some men who have commuting jobs in the city are able to obtain time off at this period to help with the harvest and part-time coal miners remain home from the mines and help. As far as I could tell, most of the women would just as soon avoid work in the rice field as they claim it is very hard

on the back. However, two features of the job are attractive to women if they are hired. That evening, they are entertained with dinner and do not have to help prepare dinner or clean up afterwards. Second, some women seemingly enjoy the discomfort to be observed in men watching women doing a man's job. The women who claimed this sentiment were all over forty, but younger ones smiled and giggled when this was repeated to a group.

Procedures after transplanting are similar to those described for the first crop: weeding, fertilizer, and insecticide but due to warmer weather seldom does it take more than 110 days from transplanting to harvest. More insecticide is needed because of the warmer weather. When the top of rice starts to bend with weight, the field is dried out in preparation for the next crop of vegetables. The second rice crop in Sanlei produces about as much as the first crop, occasionally more. This is rather unusual for Taiwan as a whole and is due to the fortunate abundance of water in Talei Li. Both crops are much larger than earlier in history due to improved strains and technology but the total production is less in Talei Li than the general average for Taiwanese paddy fields because of the poor and shallow soil.

Rice straw from the second crop is bundled and sold to brokers from Taipei who come out with carts although women gather and save some of the rice straw to make

brooms. There are no permanent relations established with the city brokers; it is strictly a "price" sale.

The rice is used to pay land taxes, to exchange for fertilizer, and for home consumption. Because of the size of the population and the limited area of paddy land, surprisingly little makes its way to the market for cash. Some is exchanged for farm labor at a discount over the rate it can be purchased in town to the benefit of the laborer who feels he gets more for his labor and of the farmer who saves by cutting out the middle man and avoiding transportation expenses. (Labor work groups and exchange labor are discussed more fully in Chapter VI.)

Tea

Approximately ten years after the Japanese assumed control, tea was introduced into the Talei area from other parts of Northern Taiwan where it was previously well developed. By 1915, there were large harvests in Talei Li. From its inception, tea has been a major cash crop produced for a national and international market. Tea can be grown on the rather steep slope land surrounding the village. All but the shallower slopes are improved by creating a series of steps for the tea plants. Rows of tea plants must be a yard apart, but because of the steepness of the slopes, most steps are only one or two yards wide and therefore, contain only one or two rows per terrace.

Tea was extremely important and valuable in the area during the nineteen twenties and thirties. During World War II, because of the disruption of transportation facilities and Japan's war position, there was serious curtailment of the market causing great losses in the li. There was another spurt following the war for a few years but again, the area is in a serious tea decline. The villagers believe that Taiwan is not getting its fair share of the world market because the Chinese (Mainlander) quality control system is not as good as that of the Japanese, i.e., they ship inferior products which are labeled superior. There does appear to be some truth in this belief. An official at the farmers' association in Hsin Tien explained that some government inspectors were recently fined for accepting bribes from tea brokers for falsely placing tea in higher grades to obtain better prices. Maintenance of proper quality control is a common problem in Taiwan. Every few months, the newspapers headlined a Japanese rejection of a boatload of bananas from Taiwan because of poor quality.

In spite of quality control problems, the major part of the decline in tea marketing is due to the fact that tea farming requires much labor and Taiwan, with its rapidly growing standard of living and increasing labor costs, is likely to be priced out of the international market as compared with India and Ceylon. Moreover,

according to the government, many of the tea plantations are old and degenerate with only a few containing the newest and best varieties of tea. Since a tea plant may remain productive and commercially valuable for 20 to 30 years, tea farming is unresponsive to rapid changes in the world market and requires a considerable investment to substitute improved varieties. Comparatively, if the market drops in asparagus, the farmer simply does not plant it the next year but when a tea plant is set out, it is expected to yield for at least twenty years. Although the government experimental station in Ping Chen (not far from Sanlei) with the help of the J.C.R.R. is promoting an improved type of Assam tea, the variety is not likely to be adopted in Sanlei because of the current replacement of exhausted tea plants with newly developing fruit cultivation to be discussed in the next section.

Tea seeds are sown within ten days of the winter solstice, about the middle of December. In about one year, they are one foot high and may be transplanted to the mountain fields, 9000 plants per chia, during the cold weather in December or January. One year later, harvesting may begin but reasonable levels of production will not be realized until the tree is three or four years old. The tea plant has an average economic life of about 25 years but there is a tendency to extend it too far. There are four kinds of leaves to be harvested in a single year.

According to percentage of yield, they are spring leaves (50%), summer leaves (25%), autumn leaves (20%), and winter leaves (5%). The bulk of the harvesting commences in early April and ends in September. The 9000 trees (one chia) will produce about 1200 chin (1600 pounds) of green leaves in a year and these will be reduced to 300 chin of dry leaves.

Maintenance of the tea field features heavy cultivation of the soil around each plant in January and light weeding in March, June, August, and November. Sometimes plants are fertilized but this may be omitted for several years. It is felt that most insecticides would spoil the tea so they are rarely applied. The flowers necessary to produce the highest grade tea (Jasmine) are interplanted between the tea bushes.

In contrast with rice production which is primarily a man's task with the occasional help of women, tea production is primarily a woman's task with the occasional help of men on the basis of total man hours committed. Men do the heavy cultivation and the planting and transplanting. The first task is male because of the previous standard based on how heavy a task is rated and the latter two because tasks which require high levels of technical skill and knowledge are always male. Work which can be learned with little effort and requires few important decisions is assigned to women. Women do most of the weeding

although occasionally men may help. Only women harvest tea and a man who harvested would be a source of much amusement. Even boys, although they do some work normally performed by women, never harvest tea. Harvesting is compensated on a piece-work basis, $5.00 for each 4 chin of tea leaves. The best girl could pick close to 30 chin in a day but this would be a day of hard work from early morning to late evening. Since a man's normal wage for weeding is $50.00 and a woman's is $30.00, any man picking tea on a piece-work basis would earn closer to $30.00 than $50.00 and would thusly, be considered to be working for woman's wages.

There now seems to be something sacrosanct about the $50.00 wage for an experienced man. Good and poor workers both get the same $50.00 for a day's labor, but the best workers are able to obtain work more frequently. Women, for other than piecework, get $30.00 per day but this rate is subject to some bargaining. A couple of skilled village women earn as much as $35.00 or $40.00 per day for some tasks. Boys earn less than women receiving little increments of increase as they mature until reaching women's wages and slightly beyond. There are seldom any increments between $35.00 and $50.00, the latter step achieved in a sudden single jump when a boy becomes a fully-fledged man. There is no clear-cut life cycle event to mark this stage which is not directly related to

chronological age and varies with the physiological maturity of the individual and his ability to demand this level of respect from village men. However, it is hard for a young man to get much work for although he must be paid an experienced man's wage, he lacks both experience and reputation.

After tea leaves are picked, they are spread out in large shallow round bamboo baskets to dry and then sold to one of the five tea processors in Talei Li, seldom to outsiders. Three processors operate in Sanlei and two in Erhlei although one of the Sanlei processors is now quite inactive, only processing tea grown in his own fields. Competition between processors is quite fierce but not on a price basis. Relations are built up between processor and farmer and tend to last a long time (see Chapter VI). Tea processing is primarily a man's task. Different kinds of tea are produced dependent on the amount or lack of fermentation, the types of leaves, and the additives: green, red (black), and jasmine and in two or three grades each. The hard part of the work is maintaining the fires as the leaves are roasted in large metal tins. After roasting, the leaves are placed back in the drying baskets for sorting, another task for women, but in this case, old women. The work is tedious but not hard and can be learned with a half-hour's instruction. On a piece-work basis, an old woman can easily earn $20.00 to $25.00 per day.

The tea processor sells his completed product to wholesalers and retailers in Hsin Tien and Taipei traveling into the city once every two or three days during the busy season. Although there is a big wholesale market, each processor tries to build a network of regular retail or packaging customers to even out price fluctuations. These price changes may be quite large, leaving him in a precarious position. The tea processors and some of the larger tea growers become quite familiar with market conditions all over the world. One man from Erhlei was formerly part of a big wholesale firm in Hsin Tien and once traveled to mainland China and Japan on tea business. Some of the village tea recently went into a shipment of 100 cases to the United States and several different villagers told us about it when asking our help in encouraging the United States to buy more Talei Li tea. Taiwan's best market for tea at present is Morocco. Tea marketing demonstrates another facet of the division of labor in that relations with wholesale buyers and sellers are for men as is the management of a business.

The tea business and its development has undoubtedly improved the status of women. No reason can be found for the abundant use of women in growing tea, but early histories of Taiwan all stress the use of large numbers of girls to pick tea (Takekoshi, 1907:240; Davidson, 1903: 381-5). As tea growing technology diffused, the custom of

involving females spread with it. When it first came to Talei Li, village women began to be employed in tea activities but for the busiest harvesting season, girls were brought to the area in work teams, some from as far as Mainland China. There were many tales told by village men about their sexual exploits with the tea girls who usually stayed in crude huts in the mountains during the busy harvesting season. In the late nineteen-thirties, the outside girls began to be slowly replaced by village women to the point that no outside teams have been used since 1949. This change keeps the wages in the village and also helps allow village women to be economic assets.

Oranges

The third major cash crop in the area is citrus fruit, primarily oranges, but with a minor emphasis on pomelo. The potential income has not yet been realized in spite of heavy investments. As additional mountain land is developed or as old tea plants have expired, orange trees are planted. In the early nineteen-forties, tea profits were poor and tea farmers were searching for a new product with the help of the government. A Sanlei villager acquired knowledge of the techniques of growing oranges by working five years in an orchard 50 miles south of Taipei. When he returned to Sanlei, he wanted to try raising oranges himself. The Japanese aided introduction of oranges by renting him a piece of mountain land at a very low

rate and by paying half the cost of his first transplanting of 50 seedlings (trees about 25" high) in 1943. Because there is a long period between the planting of a seedling and first sale of oranges, it took a very long period before other villagers followed his example and as late as 1966, only a minority of the orchards were in full mature production although many others are rapidly approaching maturity.

New products are rarely adopted until farmers can observe the financial returns and since it takes a heavy investment in cash and labor over a long period of time before any reasonable return is achieved with orange orchards, the diffusion process has been slow.

In January of the first year, seeds are cast in seedling beds which have been well prepared by intermixing earth and night soil. Weeding is continued monthly during the first year with careful light applications of fertilizer in March and June and insecticide when needed. In November, a second bed is prepared for the seedlings which are transplanted in December when about 14" high. During the second year, they are fertilized four times, sprayed with insecticide once every two months, and weeded once every two months, the latter two in alternate months. In January of the third year when seedlings are about 30 to 36 inches high, the upper part is cut off and a branch from a good mature tree is grafted in its place. Ten days

later, all but the main bud are trimmed off. Activities during the balance of the year include monthly applications of fertilizer and insecticide and bimonthly weeding. In November, the beds are prepared with the holes four to six yards apart and the final transplanting is accomplished within ten days of the winter solstice. Aside from extra watering the first few weeks after transplanting to supplement the rain, the routine of care remains the same throughout the life of the tree. The ground is cultivated once per year and both weeded and fertilized twice each year in February and August. Insect control is monthly in the warm weather as needed but rarely less than three times a year.

Trees start bearing fruit the seventh year. The major harvesting months are in November, December, and January, starting when tea harvesting slackens and ending about the time when the paddy fields should be prepared. The 7th year the 60 trees which fill one chia of land will produce about 500 chin of oranges and the 8th, 2000 chin. Full mature production commences the ninth or tenth year and dependent on insects, disease, and weather, production will range from 8,000 to 12,000 chin per chia. Diseases and insects have only become problems since the increased amounts of land have been devoted to oranges. The farmers' association provides expert advice in dealing with problems as they arise, but officials in the Hsin Tien office

are not sure that they can control all potential problems.

Almost all the oranges not used in home consumption are sold through the Fruit Cooperative Association in Pan Chiao. They may be delivered to a warehouse there or to one in Taipei. All orange growers belong to the cooperative and the li has three representatives on its board of control. The price received is dependent on grade (size) and quality and ranges from $2.50 to $4.00 per chin with an average of $3.00.

As can be seen by the above time sequence, it takes a considerable investment before any return is achieved. Land must be purchased and taxes paid each year for eight years or rent must be paid for the same period without income. At the same time, substantial labor inputs are required for transplanting, weeding, fertilizing, and insect control and cost of insecticide and fertilizer is not inconsequential. Much of the savings from the increased yields for other crops and from non-farm employment is being devoted to orchard development with high returns expected, just around the corner.

Orange orchards are reasonably new and a firm tradition with regard to the division of labor has not yet crystallized as it has for most other village tasks. Transplanting and fertilizing is strictly a male operation as is all skilled farming. Although males and females alike weed and pick oranges, females are beginning to

perform a majority of the weeding. For a day's weeding, a man earns $50.00 and a woman, $30.00 but a man does not appear to pull two-thirds more weeds in a day than a woman although that is the wage differential. Both men and women work on their own fields, but if someone is hired to weed, it is now likely to be a female or a boy who earns wages equal to the women's level. Harvesting is neither heavy nor hard, and because it is compensated at piece-work rates, neither sex yet seems to be favored. Once again, marketing and dealing with the cooperative is strictly for men. Harvesting oranges takes place when the tea harvesting is at its slackest period and therefore, introduction of citrus orchards has made it possible for Talei women to earn income during the entire year.

Miscellaneous Cash Crops

There are currently no other important commercial food crops grown in Sanlei Ts'un. During our study, two of the most progressive farmers in the village, brothers in a divided household previously introduced in connection with the plot of land which was lost during the land reform program, made their first try with 600 banana trees. Returns have been good for two other villages about three miles away. The younger brother's son was sent to observe methods in one of the two villages at the farm of a ch'in ch'i (affinal relative) and the family

consulted with extension agents and the farmers' association. Other villagers are watching closely.

The village is close to Taipei and seemingly could share in the truck garden market, but no village in the immediate area other than one village, about two miles distant, participates. The latter was chosen by the farmers' association in Hsin Tien as a model village for vegetable production. After seeds, assistance, and guidance were provided by three technological experts who were assigned nearly full-time, the returns have been very high. The experts have withdrawn except for one who returns periodically for consultation as the innovated system is now self-generating. That is, it appears the village will continue to raise vegetables for the market without further stimulation.

Other villages have observed the techniques of growing and marketing vegetables but there has yet been little diffusion. The techniques are considered complex, the dangers of market fluctuation high, and the experience regarding potential damages by insect and weather nonexistent. There is interest however and the passage of time is likely to result in copying.

As can be seen in the detailed descriptions provided for growing other crops, farm technology is highly complex and villagers regard a skilled farmer as a master of a trade. Although anyone can do some farming tasks,

the necessary skill to make correct decisions takes considerable time to acquire. One of the reasons for this is the fact that some problems appear rarely. The infrequency does not imply a lack of seriousness for the loss of a full crop only once every fifteen or twenty years is still a disaster. The infrequency of some kinds of problems does delay the introduction of new crops. Moreover, this belief that farming is a highly skilled trade inhibits the full use of women. It is believed that women do not have sufficient time to learn all the skills because of their household responsibilities. Additionally, there are restrictions on male-female interaction and since an individual learns part of his farming skills by talking at length to other farmers, women are handicapped by the restrictions on communication with skilled farmers who are presently all males.

Sweet potatoes are important in the village, but were never grown for sale until recently. A small nearby dairy, one year old, keeps its cows inside a building and feeds them by hand. Sweet potato leaves are purchased from Sanlei villagers to supplement the hand-picked grass and commercial fodder. Four older men cultivate bamboo shoots, minor amounts of which go to the market in Hsin Tien. Vegetables of various kinds are grown in the village although only a few are sold and those only through the

local stores (20% discount) or to the nearby mine dormitories (10% less than town prices with free delivery).

Subsistence Crops

By this category, I refer to those items grown for home consumption. A major item is sweet potatoes which can be grown on dry land in small scattered locations. Occasionally, they are planted at the end of the second crop in a paddy field but in this case, it is not possible to plant the first rice crop the following year. However, the yield is high and part of the field can be used for the rice seedlings. Sweet potatoes are an important part of the local diet, particularly in the form of a fried sweet-potato pancake, steamed, or as a kind of mush. Also, both the leaves and potatoes are excellent for animal fodder. Sliced in chips and dried in the sun, sweet potatoes can be readily preserved for future consumption. When sweet potatoes, which take six months to mature, are planted after the second rice crop, raddish is interplanted in a multiple cropping technique. Raddishes, which only take 60 days to mature, are dried and preserved with salt or pickled.

Almost every house, even those with no other agricultural activities, will have a small nearby vegetable garden. Several of the very small plots of land away from the households are also devoted to vegetables, but not any

great distance due to the necessity for liberal application of excrement, human and animal. Although night soil is rated higher than chemical fertilizers, farmers find using it distasteful. Application of excrement is usually by men, although women do most of the tending of vegetable gardens including planting. With rare exceptions, only sweet potatoes and bamboo shoots are ever grown far from the household.

The kinds of vegetables vary with the season, i.e., certain weather is best for certain items. Currently, most vegetables are available in the Hsin Tien market year around. However, village menus stress the vegetables which are maturing in the village. Even if a household is out of a certain vegetable in its own plot, if it is now in season, it will still be purchased because the price in Hsin Tien is probably very low. Important vegetables include bamboo shoots, cucumbers, green pumpkin, squash, beans, ginger, leafy vegetables, onions, leeks, and cauliflower. Soy beans are raised and many households prepare the soy sauce without which few meals are possible.

Animal Husbandry

Important animals for food in the village are pigs, chickens, and ducks. As previously stated, there are only three water buffalo in the village. A count of animals made on November 4, 1966 is used as a basis for the discussion of animal husbandry but variance would not be great

for any other period. Although detailed breakdowns vary, the total number of animals in the village was always about the same. Six of the sixty-six households have a dog and eight have cats. Cats and dogs were rarely kept in the village prior to the last ten years for villagers believe pets are a sign of affluence. Three households own a total of 13 turkeys, and two others, six geese, both considered to be luxury items.

Chickens are the most popular item. Fifty-seven of the sixty-six households were raising (for meat rather than eggs) a total of 421 chickens, an average of over seven each. Instead of hatching eggs, chicks are purchased from the peddler who comes through about once a month or are carried in from Hsin Tien. Chickens are rarely consumed as part of the regular diet. Instead, they are eaten as part of the periodic religious feasts (see Chapter IX) or on special occasions such as weddings or funerals. Since chickens eat scraps and largely fend for themselves, they cost little to raise and add significant quantities of protein to the diet for the festivals during which chickens are eaten are not infrequent or sporadic. A typical household would normally plan on having chicken or duck about three or four times each month. The raising of ducks is similar to chickens but less common, 16 households owning 74 ducks. Every duck-owning household also owns chickens.

The biggest investment is in pigs which are expensive animals. Forty-four households own 113 pigs, one household with fourteen, one six, one five, and the rest, three or less. Typically, a farm household raises one or two at a time in pens with a thatched roof attached to the house or in a nearby open building with a thatched roof. Pigs are fed rice chaf, scraps, sweet potatoes including leaves, and compressed soy bean curd cakes ($195.00 each) which are purchased from the peddler who comes through the village three times a week.

There is a butchering place for pigs in Pouti, about half way down the road to Hsin Tien which serves an area including about 900 families, nearly all rural (see Figure 1). About eight or nine pigs are slaughtered daily. On the first and fifteenth of the month, twice as many are slaughtered (see Chapter IX) and on festival occasions, there may be many more. Before a pig can be slaughtered, it is necessary to purchase a permit the previous day from the township office in Hsin Tien at a cost of $340.00, reduced $5.00 if the pig is for home consumption rather than sale. For a very big festival, the township office will send a clerk to the village to collect the tax. The pig is taken on a hand-hauled cart to Pouti early in the morning for slaughtering. A policeman is available there to take the permit and officially stamp the pig. The best weight for slaughtering is 180 <u>chin</u> although 200 <u>chin</u> is

considered acceptable by rural people. It is said that city people prefer a pig of 160 chin or less because they prefer less fat.

Two years ago the slaughtering tax was only $280.00. Under the Japanese, a similar slaughtering permit was required but the tax then represented less than 10% of the pig's value whereas now it is close to 20%. In any case, the high tax plus the high cost of the bean cakes has created the belief that no one can make a profit raising pigs although the government, through the farmers' association, is encouraging farmers to raise pigs. The village Small Unit Head and Vice Unit Head of the association have attended several meetings concerned with encouraging hog production. Although they have passed out much literature, they have had little success in promoting pig production. No small part of their failure is because they too believe that there is little profit in pigs although in order to set an example, both are raising more pigs than the average villager. Pigs seem more valuable for their manure in making compost than for meat. Only farmers who have ready sources of pig feed and a need for fertilizer raise pigs. There is one major exception, a family planning a wedding may raise a pig for the feast. Although the amount saved is not much, the cost goes out a little at a time rather than a big cash expenditure at the time of the wedding. Only one Sanlei man presently

is trying to raise pigs for a profit.

One slaughtered pig is returned daily to Erhlei for local consumption. Both stores in Erhlei but neither of the stores in Sanlei sell pork although Sanlei stores do sell dried fish and canned fish or canned meat. Ignoring the few people who bring meat home from the city, one pig is sufficient daily for about 150 families. The daily consumption for a family of six (average) would rarely exceed one or one and a half chin (less than two pounds) except on special occasions.

Wood

Wood is another agricultural profit-making product that grossly falls under the rubric of agriculture because the trees are cultivated rather than natural. Tree seedlings are transplanted in December or January and then cultivated each August and weeded each January during the first five years. They then require little subsequent care. They are cut when about one or two inches in diameter for firewood for cooking. Some wood is used right after cutting although most is left to dry out first. About thirty per cent is converted into charcoal by specialists in another village just down the road on the way to Hsin Tien. There are two lumber yards there which regularly buy wood at a standard set price if it is transported to the door. The piles in the two yards can be seen from the bus window so that everyone knows when they

are so low a yard is ready to buy more wood.

A great deal of the mountain land is devoted to wood, especially many of the steeper slopes. The contiguousness of the village to the city of Taipei helps make the wood valuable for its relatively low price per unit of volume would soon consume any long-distance transportation cost.

Wood bundles are heavy and usually, given the long distance to the forests, must be carried by hand down the mountains to the roadside or village. Wood for sale is usually carried by men on a piece-work basis with the rate adjusted according to the distance to be traveled. The rate is such that it is difficult to earn the $50.00 level of men's regular wages without a dawn to dusk effort but $40.00 to $45.00 can usually be achieved in the regular 8-1/2 hour day and this is higher than regular women's wages.

In agreement with the principle that females are responsible for the kitchen, a woman carried most of the wood used for cooking in her own home. Men may carry wood for their wives on the way home from some other task, but if a special trip must be made for wood to be used in the kitchen, it is expected that a woman will make it.

Non-Agricultural Employment

The major means by which Talei Li men earn a living outside farming is in the coal mines which have been

commercially important in the area for over fifty years. Prior to World War II, the mines employed only full-time miners but due to the labor shortage during the war, some villagers were added on a part and/or full-time basis. The most recent period is witness to a rapid expansion of industrialization on Taiwan and a consequent increased demand for Taiwan's coal. Coal production in 1965 was 5,054,463 metric tons, the highest in the history of Taiwan (China Yearbook, 1966-7:302). Satisfying the demand for coal has created serious labor shortages which are being overcome by retired Mainland soldiers, migrants from labor-surplus areas, and villagers on a full-time or part-time basis.

Some miners live in dormitories near the mines, but others, including all villagers, commute daily. Most mine work is compensated on a piece-work basis. Mines usually operate on shifts for a six-day week. Men may work individually but most often, unite into small permanent work teams which share output equally. Income varies according to the skill, energy, and the richness of a particular vein but the latter factor levels out over time. The average wage is about $80.00 per day with some men consistently earning $100.00. Few men earn less than $70.00 on a regular basis, a rate which is considerably higher than farming wages.

There are serious drawbacks however, for health and safety standards are almost non-existent. Men frequently die in mine cave-ins, one during our study. Sanlei had only a few regular miners, yet three women residents were widowed as a result of mine cave-ins although two of them subsequently remarried. Many of the miners are seriously injured and it is almost assumed that a man with a missing arm or a leg lost it in a mine accident. One man in Sanlei lost his right hand the year before we started the study.

Finally, there is the lung disease of miners, silicosis or the black death. The latter probably also contributes to the higher than average incidence of tuberculosis in men who are miners although tuberculosis is a disease with a high morbidity rate in Taiwan in general. No old man in the area has been a miner in his youth and one of the oldest former miners, now age 58, has tuberculosis. Everyone agrees that it is extremely dangerous to be a miner and many men simply refuse to work in the mines because of the fear of injury or death.

Yet, because the wages are about the highest for labor and a man is able to work when he might otherwise have idle time and still get off as often as he wants for as long as he wants (thus making it possible to work on his farm during the busy seasons), employment levels remain high. There is no other job which allows a man so much

income after only about two weeks training. Only seven Sanlei villagers are full-time miners and one of these is a dynamiter who earns a salary of $100.00 per day. A man is usually introduced to a mining job by a relative or friend who takes responsibility for his on-the-job training.

In addition to the miners, there are many other kinds of occupational specialists in the Talei Li area such as the barber, carpenter, mason, bicycle repairman, roofer, etc. It is a misconception to consider the Chinese household as a semi-isolated self-sufficient unit. In addition to the penetrations of the government and the market, the high incidence of labor specialization restricts freedom of action for the typical householder. Throughout history, the village and its nearby market town constituted a clear example of the organic solidarity conceived by Durkheim. That is, there is a high level of labor specialization and interdependency. Each individual contributes his own special task activities, the sum total of which fulfill the needs of the collectivity as will be demonstrated.

The various kinds of occupational specialties for which wages may be paid can be placed on a continuum. At one end, the activity can only be performed by an expert; at the other, by anyone. For purposes of illustration, in America, only a doctor can perform operations or a lawyer,

give legal advice but anyone can wash the car or cut the grass. Not as well known perhaps are the restrictions on plumbing, electrical work, and the like. The force necessary to restrict such work to specialists in the United States largely depends on the law, police, and the courts. Although some of the enforcement of the division of labor in China is through the legal system as in the case of medicine, there is considerably less dependence on the government. Rather, there is a set of cultural values specifying which tasks are appropriate for experts and which are not. The community members exert social pressure on an individual who does a task customarily reserved for a specialist. He is said to be "breaking someone's rice bowl" (see Glossary C). The statement illustrates a basic understanding of the total system. A man earns his rice[4] by exchanging an activity and if someone else performs that activity in his place, he will go hungry. If too many people did not hire specialists, the specialists could not purchase food, and the whole system would break down. This was about the manner that several village men were able to extend the meaning of the quoted phrase.

I learned the extent of social pressure on transgressors the week we moved into the village. I nailed some screening over five windows in our house and this shocked many villagers. Very politely, at least a dozen

men (not in a group) told me that Kao Mu-li in the next village was very good at that kind of work, if he was employed the job would last longer, and right now he was not busy. I immediately hired him to build my screen door and paid above standard rates for the job to make up for my inadvertent error. This price soon became common knowledge throughout the area.

Other similar examples were witnessed. The village barber, Liao An-pei, was seeking a wife and during our stay, built a new house with one of its rooms designated for his shop. As the building neared completion, he believed he had spent too much money. Although he had hired a painter to put one coat of paint on the woodwork, he considered doing the second coat himself to save money. Since he had never painted before, he picked up a brush while the painter was putting on the first coat and painted a window sill. Everyone in the shop laughed at him and called others to come and see Liao An-pei painting. For days afterwards, although I could detect no difference in the comparative quality of the workmanship, visitors were shown the window-sill that Liao An-pei painted. This always brought a smile and often, an additional comical remark. Liao An-pei decided to omit the second coat until after he saved more money. He explained that business men had to be extra careful. Since almost every man in the village was his customer, if they got angry, he would lose

business. He also explained that every villager had his haircuts in a barber shop and not at home. If a man was poor, he just got haircuts less often. Although Liao An-pei had a standard price, he did cut the hair of some village indigents at a discount or even free and no one seemingly abused the privilege. This kind of contribution was common in the village for the community was in some ways like a kinship group who took care of its own members when they needed help.

The occupations in Taiwan which are restricted to specialists are equivalent to those termed professions or trades in America. The trades include repairmen and the various building occupations such as painter, carpenter, mason, roofer, or plumber. In America, even when these are restricted, many householders will perform these tasks in their own homes. Government agencies have even institutionalized the practice by issuing "Homeowner's Permits" which allow an individual to do restricted work on his own home although it requires a registered tradesman such as a journeyman or master plumber to do the same job in any other home than his own. The typical American does more of these "do-it-yourself" activities in his own home than the typical Sanlei villager. There is one regular exception: the householder may help his hired specialist. For many tasks, I could detect no difference in the quality of the work of the expert in contrast to that of the homeowner.

I never observed any major job without at least one hired expert although on two occasions, there were more householders than experts on a single job: when the mayor and his son helped one expert replaster a mudbrick house; and when Liao Chin-ping (one of the village miners), his younger brother, and his son helped two roofers put a new tile roof on his house.

The job of laborer in construction was open to everyone, even women, although in the United States, laborers are also unionized and restricted in the building trades. The most common kind of "do-it-yourself" activity seen in the village was for the householder to act as a laborer for his hired craftsman. Other jobs which were open to everyone included farming and work in the factory or a commercial establishment. Almost every family in the village was engaged in some farming and most women, at least, grew vegetables. Even when a man had a full-time job, he usually farmed part-time, sometimes as a laborer, but more often as an owner-operator or tenant.

There were four men with trades who regularly lived in Sanlei village. Two were carpenters, one full-time and the other part-time. In the village area, a carpenter earns $65.00 per day, higher than the skilled farm-worker wage of $50.00 although not as high as carpenter wages in the city of Taipei. The third man with a trade was the barber who charged $5.00 for a haircut, shampoo, and shave.

He was born in Sanlei, served a three-year apprenticeship in Taipei, worked in Taipei an additional four years and then returned to the village to establish his own shop. He claims that he earns less in the village but that his expenses are also less and that it is much more interesting to live in the village where he has many friends and relatives. Finally, one man is a mason who performs most of his work building elaborate tombs for a geomancer from Taipei.

The mid-wife is the only village woman who has a position the equivalent of a trade or profession. She is teaching a younger woman as her future replacement in the same manner in which she learned her skills but she has recently been required to attend an in-service training program at the clinic in Hsin Tien.

Another possible way to earn money is to work in the city and live in the village by commuting daily. Five men are regular commuters although four of the five are also part-time farmers: two work in a metal plating factory near Taipei earning over $2,000.00 per month; one is a part owner of a bicycle sales and service shop in Hsin Tien; one works as a janitor at National Taiwan University in Taipei; and the last drives a truck for a Taipei factory. Men with the higher-paying jobs ride the bus and with the lower-paying jobs, their bicycles, but because the bus service between the village and Hsin Tien is so

infrequent, the bicycle adds little time to commuting. The longest ride by bicycle taken regularly for work is about seventy minutes.

Two young men are serving apprenticeships by commuting daily to Taipei. In the past, apprentices usually lived with the master who fed and clothed them and provided a very small allowance as they learned a trade. The current approach is towards treating the apprenticeship as a regular job with regular hours but low pay of only $300.00 per month so that the situation is, in effect, one in which the apprentice is giving up part of his normal wages as a tuition fee. Three Sanlei village boys are "living in" apprentices and since they are registered in the city and sleeping there regularly, they were not counted in the Sanlei population. However, they do return to the village regularly for festivals and merely to visit relatives and friends.

There are more opportunities for females than males to commute because of the current operating policies of the many clothing factories in the area around Taipei which require large amounts of relatively unskilled light labor. Young women easily fill the jobs and can find employment much more easily than boys. The factories regularly send recruiting teams to the village, announcing the date by posting red handbills all over the area two weeks previously. All the factory girls in Talei who commute work

for one of three factories but many girls go off to work in other factories which provide supervised dormitory accommodations including food.

At one factory which is within a 45 minute bicycle ride distance, a group of girls from Talei Li work by commuting daily. In the morning, two girls start out from Szulei, pick up two more girls in Sanlei and several in both Erhlei and T'oulei and then go on together in a group of li girls only. The other two factories each send a truck to the village in the morning to pick up a total of five Sanlei girls and bring them home each night.

The other way to work in the clothing factories is to live in factory-provided dormitories. These live-in girls also do not fit the definition of village resident employed in this paper but nevertheless, eleven former Sanlei village girls are living in factory dormitories. On the average, a girl usually commutes for a period of time before moving from the village to a factory dormitory.

The availability of factory work has had a significant impact on the status of females in the village for girls are thereby, direct economic assets. The starting wage of $300.00 per month ($13.00 per day) can be increased with experience to over $1,200.00 per month for a skilled girl in six or seven years, but most experienced girls earn about $800.00 after five years. Young girls can

easily earn more by working in the fields. In spite of the fact that, on the average, the total amount earned between the age of 15 and marriage at 22 would be higher in the fields than in the factory, most girls prefer work in the factory.

Villagers view the phenomena of females working in factories with mixed emotion. They like the cash the girl earns and have even exerted some pressure to delay marriage in order to retain the economic advantage. Yet, there are fears that the girls will learn improper behavior in the factory such as city ways and will surely have freer relationships with boys that may lead to sexual intercourse as demonstrated by a couple of girls who got pregnant and, for example, by the fact that the only single girls who wear make-up, all work in the factories. There is also recognition of the basic lack of opportunity for sufficient socialization into the role of village wife. Is the former factory girl going to adjust when she marries or more important, will she even want to? Tea farmers see that few younger girls are being trained to replace the older females whose work is so important.

Finally, the family loses some control over a girl who works in a factory because she can easily move to one of the dormitories if her home life is unsatisfactory. Thus, some of her wages must be expended on her personal expenses and clothes as well as some saved for her dowry.

In the past, a village woman who was deeply dissatisfied may have remained at home because there were few reasonable alternatives whereas now she can go to the city and work in a factory. Knowledge of this opportunity undoubtedly is a threat enforcing better treatment of younger women.

There are other minor sources of income. One village woman has become a seamstress recently in competition with women in the town of Hsin Tien and Pouti as well as some in the nearby villages of Erhlei and T'oulei. Her business has been so good that within six months, she purchased another sewing machine and hired a young girl to train as an assistant.

Occasionally, one of the tomb builders will hire a number of villagers to clear a piece of land or help dig a tomb. During certain seasons, people will be employed temporarily in a variety of jobs. For example, during the winter, there are occasional opportunities to get a day's labor as an aide on a coal delivery truck. In the summer a village girl sells shaved ice in front of the temple.

Not minor in terms of income but minor in terms of numbers are the two village stores, each a family enterprise. The one which presently enjoys the greatest share of the business is run by an older influential leader surnamed Liao who is chairman of the permanent temple committee. The newer store which is run by a Chiu family who have only lived in the village forty years has a smaller

share of the business but is growing most rapidly because of progressive policies, i.e., it has the only freezer and recently added a television set for customer enjoyment (it faces the street).

There have been migrants from the village to the city, usually Taipei, over an extended periof of time. Although the village population is about 50% larger than it was 25 years previously, the growth has not encompassed the high rate of natural increase. All three village residents who went beyond elementary school are working in offices and living in the city. The daughter and son of the man with the large tea farm graduated from junior high and senior high respectively and both now work in a bank. The remaining boy graduated from junior high and a business school and works as a bookkeeper and biller in a Hsin Tien store. Two village men started a Taipei meat canning business in the early nineteen-thirties and enjoyed considerable financial success and although living in Taipei, they continue to participate in village affairs and help support the village temple and moreover, they have hired many people with Talei Li origins in their meat factory.

City residents return often to the village both for the special occasions and on their off days merely to walk around, visit, and chat. Their homes and contacts in the city help to make the transition to the city easier for a

new migrant and they are an asset to the village in other ways for the continue to contribute to village and temple affairs. By informal means only, I was able to locate 27 families in Taipei which were headed by individuals who had formerly lived in Sanlei.

The above description indicates how Sanlei villagers draw means for their sustenance locally and from the surrounding area. Food is grown for home consumption and cash is earned by selling surplus food and other agricultural products. It is implied that some of the cash is used for items not available from fellow villagers. Not only are there regular trips to town for purchases, many different kinds of peddlers regularly appear in the village as previously discussed, in an average day about three to five. About once every month or two a traveling sales show comes through and stays one night in either Sanlei or Erhlei, entertaining with songs and chatter as long as people keep buying medicine.

The village is not remotely self-sufficient. For example, all farm implements and all cloth among other items must be purchased. For some goods and services, the purchase is on a price or impulse basis but for others, there are regular established relationships. For example, T'oulei has an electrician but no carpenter while Sanlei has several carpenters but no electrician. The custom has developed such that Sanlei carpenters get

most of the T'oulei business and vice versa for the T'oulei electrician. Although it is now not considered a direct exchange on a one-for-one basis as in barter, it is almost as if the two villages were trading services for there are felt obligations on each side. For most of the different kinds of technical services required in Sanlei there are regular known sources to be utilized with only a few alternatives. Going outside the boundaries, i.e., hiring an electrician from Hsin Tien instead of T'oulei for instance, will cause more comment and pressure than to do the job yourself. In a sense, Sanlei village may be perceived as a unit in a large system of units with which it engages in economic transactions. Although no single unit is self-sufficient, the larger collectivity could easily exist as a closed system in spite of the fact it is currently a part of a larger world market.

A Case of Technological Obsolescence

About 1935, a Mainlander who injured his foot in a mine accident moved into Sanlei village to earn a living since he could no longer work in the mines. As a boy in Fukien, he had learned to make the wooden clogs that were so popular in Taiwan. They were constructed of wood and saisal bands, both of which were available in the mountains near Sanlei. Since it was difficult for the Mainlander to travel to the mountains for the raw material and to town to sell the finished products, he brought two

neighbors into the business as partners. The business seemingly filled a necessary niche and one man taught another and before long, over 30 of the 40 families in Sanlei were engaged full-time or part-time in the clog business for a man often could earn more making clogs than he could as a farm laborer.

Business dropped off slightly during the war because of a shortage of labor although two villagers branched into the production of the thick Japanese clogs and installed a special machine in the village. After the war, there was another spurt in production but the plastic industry (replacing saisal bands) and mass production techniques came to Taiwan and as a result, the village clog business was totally wiped out within six months.

Both the inauguration of the clog business and its eventual demise were factors affecting village life. The inauguration was especially important for women's roles as will be illustrated.

The literature which deals with underdeveloped countries often calls attention to the shortage of land. In Sanlei village there is a felt need for more land, particularly paddy fields which is openly expressed and reflected in the artificially high price of the land. That is, the rate of return from a rented piece of paddy land is currently not as much as can be earned by selling

the land and putting the money in many other kinds of investment.

It is not profitable to discuss land values without reference to the kind of crops and the technological system employed in the community. A village can be viewed on one level as a potential labor pool. That is, all its members are capable of contributing increments of labor which vary in accordance with age and physical condition. There are few societies (if any) which maximize utility or achievement of this potential for there are always periods set aside for rest and recreation and certain individuals, particularly children, the aged, and often women, are not assigned responsibilities commensurate with their physical potential. A community seems to aim at some reasonable level of satisfaction although the target may be raised or lowered over time.

At the time the clog business was introduced, Sanlei was an agricultural village surrounded by fields operating in terms of a technological system which required certain inputs of man hours to manage its crops. Over time, a system had developed for assigning certain individuals requisite portions of the necessary labor inputs and as expected, women, children, and old people were especially underemployed.

The clog industry required adult male labor inputs which tended to be drawn out of the agricultural labor

pool. As might be expected in a Chinese village, mature but not aged males had constituted the majority of the labor pool in agriculture. There were several potential ways in which this reduction in the current labor force could be overcome such as by an increase in population, making more use of formerly underemployeds, change to crops which required less labor, or a reduction in agricultural activities. In Sanlei, not only was the latter course not followed, there was an increase in agricultural activities resulting from the continuing development of mountain land and moreover, there was no significant change in the kinds of crops grown on the old land nor in the technological system. The first two alternatives were adopted. There was some growth in population and some use of surplus adult males from surrounding villages. But the second potential solution is the most important for the problem considered in this paper, the use of under-employeds, particularly women. Women replaced men to a greater degree than ever in large segments of the agricultural activities.

While the clog business flourished, the employment of women in additional agricultural work became routine. When the market for hand-made clogs burst, there was an immediate surplus of male labor. It was possible for women to be replaced by men in agriculture but this did not occur. Instead, some men started to go to the city

for work and some men became coal miners. There has been some withdrawal of women from agricultural activities resulting from the fact that as women died or retired, they were not replaced by the young women who, as previously stated, are going into the factories. The ultimate effect of the clog business on the village was to increase the importance of female labor and consequently, raise women's status.

Division of Labor

The division of labor based on age and sex is a cultural universal (Linton, 1936; Murdock, 1957). It has been portrayed in previous sections that Sanlei village is no exception to this general principle for some jobs are solely for men, mining, driving, and plowing, and others, heavy work, harvesting rice, transplanting, and construction are primarily for men; some jobs are solely for women, tea picking, midwifery, clothes washing, and others, cooking, tending children, and tea sorting, are primarily for women. There are many blurred areas with overlapping assignments and other areas where one sex is favored but the other competes. For performing the same task, women usually earn less money than men. Over time, it appears that women have assumed many responsibilities and positions formerly enjoyed only by men.

There is yet a goodly distance between the status of men and the status of women. For example, only men are permitted to smoke, a practice which is enjoyed by almost all adult males in the village. When a boy is able to earn a man's wage, he too usually starts to smoke. Women however, are not supposed to smoke and the two Sanlei women who do smoke regularly are not from high status families and both justify smoking in terms of its medicinal qualities, i.e., it is said to relieve a tickle in the nose. Other adults also say the two have to smoke but the statement is often quite "tongue in cheek" as when one village woman about age twenty-five said that when she was forty or so, she was also going to develop nose trouble and take up smoking. The justification is another instance of the mechanism of avoiding conflict and refusing to recognize violations of village norms in order to promote harmony (see Chapter IV).

Small children have considerable play time but soon assume minor responsibilities. Older children care for younger children regardless of sex and most children make some economic contribution to their households through such tasks as gathering grass for buffalo and pigs. Young girls help mother and boys help father but it appears that girls have more responsibilities than boys.

Given the differential values listed above regarding adult males and adult females, adolescent boys face a

serious status inconsistency problem. After graduation from grade school, girls can immediately find jobs with good pay in the factory while there are few equivalent opportunities for boys. Villagers sometimes claim that today, perhaps girls are worth more than boys.

Household Money Management

We had several households[5] keep detailed budgets for us and periodically discussed budgets with all villagers. Among farmers, it is quite difficult to accurately discover the standard of living for they consume part of their crops without any purchase records and barter other items. The families with wage incomes are easier to evaluate and I have extrapolated from them to determine reasonable standards for the village.

Given the values usually associated with Chinese households, i.e., patrilocality, patriarchy, and a patrilineality, it might be logically predicted that a senior male would usually assume major responsibility for financial management of the budget but Sanlei data would refute the prediction as indicated in Table 4.

In 39.7% of the households, a man was primarily responsible for managing the budget. In some cases, he gave his wife a periodic allowance for groceries and in others, he did most of the purchasing himself. In either case, he doled out money as requested for special

purposes. Women in these kind of households were seldom fully aware of the monthly budget or family financial condition overall.

Table 4. Sex of Budget Manager by Household Type

Household Type	Number*	Male	Joint	Female
Extended	8	62.5%	25.0%	12.5%
Stem	25	40.0%	36.0%	24.0%
Nuclear	30	33.3%	26.7%	30.2%
Total	63	39.7%	30.2%	30.2%

*Omits three men living alone

In 30.2% of the households, the woman managed the budget and handled most of the money although men did participate in decisions regarding major acquisitions. These households are not really the mirror image of the male-managed households for although men (the non-managing sex) might be unaware of the breakdown of monthly expenditures, they usually knew the monthly total and were always quite familiar with the overall financial condition. Additionally, a man always had a personal allowance for which there was no accounting which he could spend on cigarettes, or whatever he liked, but it was often a very small amount. As implied in the previous paragraph, in the male-managed household, women did not know the financial condition nor did they receive a regular allowance.

The third category, 30.2%, is listed as joint and includes those households which were really jointly managed or those which had a regular division of responsibility plus a few households which I could not accurately place in either category listed previously because of conflicting evidence. A joint management system is not unlike the practices connected with the management of an American joint checking account except that in Taiwan, especially in the rural areas, almost everything is on a cash basis. Therefore, all money coming into the house goes into a cash box and all disbursements are paid out of the box (leaving the receipt in its place). Instead of a monthly bank statement to balance, there are periodic conversations about who spent how much for what. Although there was a tendency to state that the male had the major responsibility in these households, it appeared to me that women were usually in effective control for they could rattle off the details of the expenditures with greater facility than men and both sexes also agreed that it was usually the female who initiated the conversation required to balance the accounts.

Most young men and women who earned wages turned their full pay over to their families to manage. However, each retained a regular small allowance (or turned over the money and got back an allowance) and were furnished extra money for expensive items such as clothing as needed.

It was not felt to be filial to ask directly for money but rather, one should hint about what is needed with the expectation that the parents would eventually suggest the item should be purchased. Women were considered to be more perceptive than men at perceiving children's needs but, to maintain the value system which favors males, particularly the sub-role of the male head dispensing largess, it was not at all uncommon for a woman who managed the budget in a household to "sneak" money to her husband so he could give it to a son to purchase trousers or a watch. Everyone was aware of the practice but it was not discussed openly. Young people often said that it was best to let mother know if you wanted something for she was more likely to see the wish granted. Even in a household managed by a very dominant male, women used their superior powers of perceptiveness to inform their husbands indirectly about children's needs.

The figures in Table 4 further suggest that differences in the sex of the manager are related to the household type. An extended family is the highly valued traditional form and is most likely to have a male manager. Extended households also tend to be larger, more traditional, and are almost always economically based on agriculture. The latter factor probably explains why the extended households have male managers for all three family types, even the nuclear, which are engaged in farming tend

to have a male manager. This is probably related to the uncertainty and irregularity of income and the planning needed for the investments in seed, fertilizer, and insecticide before returns are achieved.

Although not displayed in Table 4, there is no relationship between the sex of the manager and a residence pattern of matrilocal as opposed to patrilocal.[6] I felt that matrilocal households would probably have a higher incidence of female managers than patrilocal households but this was not supported (see Chapter V).

All money earned by household members is considered to belong to the family pool which is managed for the overall good of the household. The male head, whether or not he is the manager of the pool, is expected to have a regular personal allowance and any unmarried son or daughter who has a job and is contributing to the pool should also have a regular allowance and money should be set aside for their weddings (bride price or dowry as the case may be). Only women and children who do not work have no regular allowance.

There is one regular exception: married women make brooms and straw hats in their spare time and the money they earn for these activities does not go into the family pool nor is anyone in the family supposed to question what the woman does with this personal money. She may spend it for family treats like flavored shaved

ice, she may spend it on herself by buying a luxury item like a piece of jewelry, or she may just put it aside for security in her old age and also invest it in money lending clubs (see Chapter VI) or the post office. Several women have accumulated quite large sums of personal money.

Although some village men have evening part-time activities that produce income, the money earned thereby is expected to go into the regular family pool. Thus, although men can more easily tap the family pool for their own wishes, only women have a source of money and retain savings which is exclusive.

Household Budgets

The following section contains a discussion of the yearly income and expenditures of the Liao Mou-tu family which was previously introduced as one of the wealthiest in the village. Members include Liao Mou-tu, his three sons, their respective wives, and the four children of each son for a total of 19 people (see Figure 5). The figures in Table 5 are rounded for convenience and include a profit and loss statement and statement of net worth. Currently, the family has no meaningful debts.

The family netted about $6,500.00 for the year as indicated in Table 5. Since there were four adult males, the money they expended hiring farm laborers about equaled the money they earned by hiring out. The three wives in

Table 5. Financial Statement, Liao Mou-tu *Chia*

Net Worth

$ 110,000	.8 *chia* self-owned paddy field
36,000	.3 *chia* self-owned dry field, vegetables
162,000	1.8 *chia* self-owned improved slope land
50,000	improvements on 2.1 *chia* leased slope land
5,000	self-owned house and garden land
30,000	building, pig pen, share of *kung t'ing*
15,000	furniture and household contents
5,000	farm equipment
1,500	current worth of livestock
6,200	credits at farmers' association and cooperative
2,000	cash on hand
$ 422,700	Net Worth (Omits value of crops in field)

Yearly Income

$ 30,000	Oranges
5,000	Hogs
8,000	Tea
3,500	Bamboo Shoots
10,000	Wood
2,000	Vegetables
$ 58,500	Yearly Cash Income

Yearly Expenses

$ 21,000	Food purchased to supplement own crops
6,400	Food and drinks for special celebrations
1,200	Educational Fees (six children in school)
2,500	Medical expenses (one son was quite ill)
6,000	Fertilizer
2,000	Insecticide
400	Farm tools
3,000	Weddings, funerals, sworn brothers, etc.
1,500	Taxes not in kind
500	Rent for water buffalo
800	Rent on land
1,200	Transportation of oranges to market
1,000	Electricity
1,200	Cigarettes, wine, tea
1,500	Contributions to temple, school, civic works
1,800	Clothing
$ 52,000	Net Expenses

Yearly Net Profit (Income less Expenses)

$ 6,500

the household are also important contributors to income by means of a rotating division of labor. One is responsible for the children and cleaning for five days; one is responsible for cooking and washing; and one is free to work in the fields. Every five days they switch jobs although all three prefer the relative freedom of the work in the fields. There are five other such rotating work teams in the village and many other pairs who share some rotating responsibilities.

Although the Liao Mou-tu family does not appear to have earned a meaningful surplus, the figures are deceiving for the family has invested very heavily in the orange trees (requiring much labor) which have not yet reached full production. Also, this past year, they jointly with Liao Mou-tu's brother, cleared and prepared land and planted 600 banana trees although none have yet matured. The family will soon move into a much higher income bracket but has firm plans to continue investing any surplus in land and land development.

The above family might be contrasted with that of Liao Kao-mu who lives near the temple and represents the middle status level in the village. His household includes his mother, wife, and two female children. He owns .3 chia of mountain field on which he has planted oranges but which as yet have produced no return and he commutes 24 days per month to Taipei where he is employed as a

janitor and small repairman for a university building at $1,300.00 per month. He repairs miner's caps (lights) in the evening in his spare time for two of the mines and nets about $200.00 per month and also works about 3 to 4 days per month as a farm laborer at a daily rate of $50.00. His wife works periodically picking tea or weeding and subject to seasonal variation, earns about $2,500.00 per year. His mother earns another $2,000.00 yearly as a mid-wife. The total yearly income is about $24,600.00.

The family is renting a house and houseland up the hill at one end of the village which has some nearby land on which the family raises sweet potatoes and vegetables for personal consumption. Sweet potatoes are an important part of their daily diet but usually in conjunction with rice. They also raise several chickens (about 15 at a time) and eat some and trade others.

Monthly expenses just about match monthly income. Liao Kao-mu's job provides an excellent health insurance plan for the entire family which eliminates medical expenses. The family's future plans are to continue his job which is reasonably secure and features periodic raises and a yearly bonus. The mountain field mortgage is now over 80% discharged and in another year will be in full production. As soon as it is free and clear, he plans to purchase another piece of mountain land and has already

talked to the township office about its acquisition.

Although both Liao Kao-mu and his mother are upset, his wife is currently employing an Intrauterine Device in order to prevent pregnancy. Liao wants another child or two, at least one boy, but as he says, there is not much one can do about it. His wife says she will probably have another child when the baby of the family is about three or four years old.

A third contrast is with the family of Lin An-hwei, a Mainlander who is an adopted-in husband. In his home are his wife, her parents, and his four children. He is a skilled dynamiter in the mine and earns $100.00 per day or an average of about $2,600.00 per month which would be sufficient to put the family in the middle status group in the village if Lin were not a Mainlander. He does no farming but does help around the house by tending the children. His wife has a small vegetable garden (about 20 feet square) for the kitchen and also works as a laborer picking tea and weeding and earns about $5,000.00 per year. The family income totals over $31,000.00 each year.

However, the family is deeply in debt because the two old parents are nearly blind and have recently had heavy medical expenses. The current situation in this family illustrates the previously discussed problem of the high dependency ratio in the village. Four small children

and two nearly-helpless old people are all dependent on the labor of two mature adults, one of whom must spend a major portion of her time in nurturing activities.

The family diet is fairly rich and Lin An-hwei shares a bottle of beer each evening with another village Mainlander. Since the bottles are big, they take turns buying one but the cost to Lin's family still exceeds $250.00 per month. Before the recent medical expenses put them so far in debt, the family was doing quite well financially but was not investing in land or business. They ate well and Lin gambled once a month with five Mainlanders who lived in the area and he also bought many lottery tickets. His gambling and participation in the lotteries have ceased but he continues to drink.

The expensive medical treatments have been given up as part of the immediate plans of waiting for the old ones to die. After paying for their burial expenses, there are no further plans other than discharging the family debts.

The final contrast is with members of the lowest class group in the community in terms of economics although the village class structure is not sharply demarcated. Villagers will usually claim that everyone is nearly the same in the village but when pressed, will point out a few families who are somewhat richer than average and several families which are very poor but usually

qualify any such remarks with a statement that everyone in Sanlei is poor. The families which are usually considered poor and most clearly set apart from the general village population are those which do not have a vigorous adult member.

There is considerable cooperation in supporting the seven poorest families of the sixty-six families in the village. As previously described, poor people are often guests at the pai pai in their neighbor's homes. There are also reductions in the prices they pay for goods and services as illustrated by the previously discussed case of the barber and free haircuts. Additionally, both village stores charge less than the normal price and often put items on a charge account with no expectation they will ever be paid. The most important aid however is with regard to food and wood for poor families are permitted to grow sweet potatoes on little plots of land they do not own but which otherwise might be left unused. If no one in the family is capable of working the plot, farmers who pass by will regularly contribute little increments of labor to manage the plots. The poor are also permitted to help themselves to certain products, particularly the poor grade vegetables and gleanings and wood although the theft of wood and vegetables by anyone who was not poor was probably the chief source of conflict in the village.

These practices are not obvious to the casual observer for much is done to preserve "face." Since anyone who begged would necessarily lose face, there must be an avoidance of either asking for items or of offering items in a manner which suggest the receiver has need of them. Clothes are given to someone for example, because they no longer fit. Someone announces in a group that some of his vegetables are going rotten in the field because there is no one available to pick them. However, careful watch is kept on those who help themselves and since everyone's financial condition is well known, few people other than the poor are permitted to take advantage of the situation. Those who benefit most from these customs are usually widows or old men who have never married.

In summary, there does not appear to be anyone in an extremely poor position economically in Sanlei village. Although some people are much better off than others, the differences in clothing, daily diet, and style of life are not great and no one ever appears to go hungry. There is some nostalgia for the period of the Japanese occupation when prices were said to be much lower but in fact, it appears that everyone is eating better and richer foods than ever before in history for although prices are higher, so is income. The system of pai pai with many invited guests helps the poor to share the prosperity as does the reduction in the cost of goods and services, all leveling

factors in the distribution of community resources so that everyone shares in the prosperity. Finally, the continued development of land and the industrialization nearby all offer so many job opportunities that just about anyone that wants to work can earn a living.

CHAPTER IV

FORMAL ORGANIZATION AND SOCIAL CONTROL

The social organization of Sanlei can be broken into three logical divisions: formal organization, kinship, and voluntary associations. The first division, concerned with governmental or quasi-governmental units, is the topic of this chapter with the other two following in turn, one chapter each. This separation into three sections is an analytical device adopted in this paper for convenience. In village social life, all three divisions are inter-dependent and inter-twined. It is extremely difficult to categorize a concrete unit of behavior into only one of the three divisions. For example, a man votes (formal organization) for his cousin (kinship) who is a sworn brother (voluntary association). Both formal and informal mechanisms of social control will also be considered in this chapter because, in the context of the village, they are nearly impossible to analytically separate and furthermore, both are an intimate part of formal social organization.

National Government

The present government on Taiwan is broadly based on the principles advocated by Dr. Sun Yat Sen. It currently appears that elements of all three of Dr. Sun's stages are in effect simultaneously, i.e., military government, political tutelage, and constitutional government (Plummer, 1967:135). There is a written constitution which appears to provide a democratic government divided into branches: National Assembly, Legislative Yuan, Central Yuan, Examination Yuan, and Judicial Yuan. The government is a complex system of checks and balances combining elements of the cabinet and presidential systems.

Since the overthrow of the Manchus and establishment of the republic in 1911, the Republic of China has been beset with wars, internal, Japanese, and communist, and has never had full control of all of its claimed territory. These kinds of difficulties necessitated special measures such as the "Temporary Provisions" to the constitution enacted in 1948 which give the president special emergency powers during this period of national crisis. Additionally, elected government officials at the federal level are considered to represent all China. The term of office of most incumbents have been extended by special provisions until control of the Mainland is re-established making it possible to conduct elections. Since most Chinese territory is now under Communist control, the

majority of elected officials are not really responsible to their constituencies. Although Taiwan is the only territory still under Nationalist control, members representing Taiwan constitute less than three per cent of the Legislative Yuan.[1]

Even to this extent, the village does not really participate in national affairs nor do villagers desire to participate, for national government seems so distant that it is nearly beyond comprehension. While no one in the village thinks he could have any effect on national policy, villagers are directly affected by national government policies in many significant ways. Government policies have had tremendous direct economic effects in areas such as taxation, land reform, etc. There are indirect effects too such as the trade agreements negotiated with Morocco which greatly improved village tea business by opening a major new market. Government policies are increasing educational opportunities. The universal military draft, in addition to providing military and language training, has an indirect effect of delaying marriage for young men usually do not marry until after completing their military obligations. A few villagers read the national news and most hear some news on the radio or television although a radio station that broadcasts little news other than weather and farm prices is most popular.

Although there are a number of minor political parties, Taiwan essentially has a one-party government run by the Kuomintang (Nationalist Party of China). The party maintains scattered branch offices throughout Taiwan such as the one in Hsin Tien which includes Talei Li in its area of responsibility. Several villagers have joined the party although only a few remain active.

Party membership is not necessary for important political offices as demonstrated by the elections conducted in the early part of 1968 when officials who were not members of the Kuomintang captured about 20% of the seats in the local elections and 10 of 71 provincial seats. Also, the mayors of two of the largest cities in Taiwan, Taipei and Kaohsiung, are not party members (Plummer, 1969: 19). Nevertheless, as revealed by these same figures, members of the Kuomintang captured a majority of the seats as usual. Moreover, successful candidates who do not belong to the Kuomintang usually run as independents rather than as members of an organized opposition party.

There are occasional arrests for political or ideological reasons and rumors of many more to such a degree that many rural people believe that to get involved in politics may be to court arrest.

Provincial Government

Taiwan is one province of the Republic of China with its capital near Taichung in central Taiwan. Its main

branches of government are the directly elected Provincial Assembly and the Provincial Governor selected by the Executive Yuan and appointed by the President with an overall responsibility to carry out the national policies with particular attention to economic development. For the village, a situation not unlike the attitude described for the national level is evident. Villagers are not aware of most provincial decisions and do not really participate meaningfully in provincial politics although decisions at the provincial level also have direct and indirect effects on village life.

County Government

The province of Taiwan is divided into 16 counties and 5 cities, each with local self-government.[2] Sanlei village is a part of Taipei Hsien (country) which is headed by an elected magistrate. The last election for the country council members was in January of 1964 for a four-year term. Elections at this level do generate some interest in the village as demonstrated by the fact that nearly eighty per cent of the eligible voters participate although only about two thirds participate in provincial elections.

Suffrage is universal, equal, direct, and secret. Qualifications for voting include citizenship, age of 20 or over, and six months residence; qualifications for office are the same except the minimum age is 23. There is a federal law, applicable at every level of government

down to the township, which specifies there must be one woman member for every ten representatives on all deliberative bodies. This law serves to increase the status of women and results in a consequent higher percentage of female membership in legislative bodies in Taiwan than in the United States.

At the county level, economic contributions are important in winning elections. A man does not buy votes directly, but he may offer to contribute a school room or the like if he is elected. Although this is considered by most villagers to be quite honorable, contributions of money to local influentials rather than for public works is considered to be very bad and dishonest by most village leaders. No one in Sanlei is believed to have taken a bribe to influence votes but Sanlei villagers often cite one man in Erhlei and two in T'oulei as dishonest men who have been bribed. Citation of these men may be part of the factional differences in the li to be discussed later. In any case, the suspected Erhlei man is still consulted regularly for his knowledge about affairs outside the village and he continues to influence voting behavior in the li.

Hsin Tien Township is broken into two major factions which compete for political power. Talei Li belongs to the "inside the mountain" faction, the smaller and weaker of the two. Although the factions are more

important for township affairs and for such quasi-governmental units as the farmers' association or fruit cooperative, one faction may be mobilized by a county candidate who will then incur an obligation which must later be repaid. (These factions are considered more fully in a subsequent section.)

Local Government

Historically, self government on the local level has been a significant part of the Chinese system for the federal government rarely extended below the county level. When Taiwan was controlled by the Japanese, partial local control at the community level was still a regular practice and in many respects today, there are still significant elements of traditional local control governed by a principle of consensus. Secret elections, majority vote, universal female suffrage, and voting individually rather than by families are new.

Some men are still seemingly not aware of the fact that their wives may vote as they wish in spite of their husband's instructions. I was told by more than one man that his wife would not vote for his candidate's opponent for that would just cancel both their votes while many other men just claimed their wives did not understand politics and asked them how they should vote. On the other hand, several village men actively promoted candidates by stating reasons for their selection in the presence of

women. Conversely, women rarely talk politics in front of men and almost never promote candidates. After my promise of secrecy, a few women told me of voting the opposite of their husbands. I am sure some village men would be quite surprised to learn that their wives had not automatically voted for the candidates they had selected.

The underlying principle governing the above pattern of behavior, i.e., refusing to acknowledge a conflict situation or refusing to acknowledge many violations of normative standards, has appeared before in this account of Sanlei Ts'un in such guises as a female's behavior towards her husband's relationship with children in a female-managed household or in the manner in which poor villagers receive aid. It will appear again in many other forms and will be considered in the last chapter as it undoubtedly is a contributing factor to the various misconceptions about women's roles.

Let me illustrate the basis for this factor in another context. My wife once demonstrated that although American husbands and wives do not become more like each other in terms of opinionation and closed-mindedness (Rokeach and Rothman, 1965), the happier the marriage, the less the partners admitted implicitly they were different. That is, a person experienced less conflict when he was able to consciously feel that he and his spouse held

identical opinions. In the previous discussion of Sanlei voting behavior, the ability of a man to delude himself into thinking his wife voted as he did is positively related to the domestic harmony which is highly evaluated in the village.

Divisions of Local Government and Politics

There are three formal units of government at the local level and one unit which is important but does not fit well into the system. The smallest significant political unit is the *lin* or neighborhood. In the Sanlei area, each *lin* contains about 10 or 11 contiguous households. Each *lin* has a *lin chang* (neighborhood leader) who is elected on the basis of consensus in Sanlei at an open meeting. He is responsible for communicating directives to the people and aiding the local mayor in carrying out his duties. Because a *lin chang* may be held responsible for what happens in his *lin*, there is some reluctance to assume the office. We heard many times that under the Japanese, a village *lin chang* once spent three days in jail after a bandit was arrested in his *lin*. Also people say that the office means only work with no corresponding power or money.

The next larger formal important political unit is the *li* which has three officers: the *li chang* (*li* head or mayor), the representative who serves on the township council, and the village secretary. The first two are

elected by li members and the last is appointed by the head of the township.

The third and highest level in formal local government is the township which also has a mayor as its chief executive officer. Sanlei is part of Talei Li which is part of Hsin Tien Township. There are 21 li in Hsin Tien Township and each is entitled to at least one representative on the township council. Since the li with larger populations are permitted two representatives, the Hsin Tien township council has 27 members, three of whom are women as required by the federal law. In each case, the woman represents one of the li which furnishes two members. The township ranks below the country and carries out such functions as civic improvements, registration, military draft, tax collections, etc.

The three levels described above ignore a fundamental unit which does not fit into this scheme, the ts'un (village). As a village, Sanlei Ts'un has an established geographic boundary, possesses a historic reality as a unit, and is significant for social and area affairs. Sanlei is highly integrated and is a prime unit for personal identification for there is no confusion about who is or who is not a member of each village. However, in Taiwan, a ts'un (village) may have no necessary official functions, merely serving as an address and a registration unit for land. Another formal unit, the li, is directly in the

chain of command of government from citizen to lin, li, township, county, province, and republic. A li and a ts'un may cover exactly the same territory; a ts'un may contain two or more li; or a li may contain two or more ts'un. Since villages may vary in population from 50 to 12,000 or more, the village is not a reasonable unit for local government given the goal that the local units should all be nearly equal in population. Therefore, smaller villages have been combined into a single li and larger villages have been divided into two or more li. The formal system does take ts'un boundaries into consideration. For instance, although there are six lin in Sanlei ts'un, no lin cuts across ts'un lines to include members with conflicting ts'un identities.

Regional Factions in the Li

One of the two primary sets of factions in Talei Li is regionally based, two villages at one end of the li, T'oulei and Erhlei, opposed to the three at the other end, Sanlei, Szulei, and Wulei (see Figure 1). Because the Mainlanders in Wulei do not participate in li political activities, the factions are about balanced in population. Under the Japanese, each of these two factions existed as a pao in the Japanese system of local government for Taiwan.[3] Since each pao had different experiences with different sets of leaders, there is some historical as well

as regional basis to the competition.

The ideological differences between these factions may be based partly on occupational factors. Sanlei's end of the li has always been essentially a farming area while levels of non-agricultural employment were always higher at the other end of the li. Although the amount of available farm land per village was higher at Sanlei's end of Talei, the population of the two villages in the Erhlei faction nearly equalled the population of the three villages at the other end. Most people employed in other than farming pursuits tended to live in T'oulei or Erhlei. Currently, the li has one restaurant and two beauty operators. As would be expected, they are located in Erhlei's end of the li along with the school.

Sanlei and Erhlei are used as faction names because the major rivalry is focused between these two villages which occupy central points in the narrow valley that shapes the li boundaries. Laboratory experiments with small groups demonstrate that individuals occupying the most central positions in a communication pattern are most likely to be recognized as leaders (Bavelas, 1950). This process is particularly acute for a communication network structured in a straight line. Although results from laboratory experiments with small groups are not directly applicable to real, more complex situations, they do help formulate hypotheses to be tested. Although the leadership patterns

in Talei Li focusing on Erhlei and Sanlei (see Figure 1) are congruent with this communication theory, a decisive test cannot be conducted with current data and variables.

The li elects a mayor and a representative to the township council with the mayor having the higher rank. In spite of the regional conflicts within the li which were discussed above, there is basic recognition of the need for all to cooperate. For instance, the li will have only one mayor, one school, and one major temple. One compromise, now clearly established, is the fact that if one official of a political body is from one end of the li, then the second must be from the other. At the formal li level, this means that if the mayor is from one faction, the representative must be from the other. Campaigning and arguments are most vigorous but consensus is usually reached before the election.

It is difficult to determine how the compromise was originally established because everything was handled on an informal basis by reaching a consensus. At the time the two pao were combined into one li, each had an elected head, and in the first election, one head became the mayor and the other, the representative. In spite of the fact that the former Sanlei pao had a numerical superiority sufficient to elect its members to both positions, one official, as stated, was elected from the other pao. Almost everyone claimed that was the reasonable thing to do.

The use of the term election in this account carries implications which are misleading for in Talei, elections themselves are rarely contests, and only serve, for the most part, to formally confirm a decision reached by consensus.

There is a long history in China of local control and local decision-making processes, usually based on finding a reasonable consensus as described above. There was also an underlying assumption that since the winner in a contest and the loser together with their respective descendants would continue to live in the same community for a long time, it was permitted to beat an opponent but not to destroy him. If no one loses too much face, it is possible to continue life together without great disharmony. The loser should be given status to recompense his loss and the majority should consider the desires of the minority by finding solutions nearly everyone can accept. Within the li, although not at higher administrative levels, there is a practice of having the runner-up elected to a secondary position.

The sentiment is also expressed in other ways, i.e., entertainment shows hired by the entire li alternate regularly in location from Erhlei to Sanlei in spite of the number of votes or amount of money contributed by either for both regions are expected to share prestige.

Ideological Factions in the Li

The factions described above are based on territorial identity, i.e., competition for prestige, power, etc., between villages or combinations of villages which have persisted for an extended period of time. The use of faction in this regard is not consistent with usual anthropological analysis of local level factionalism (Nicholas, 1965:21-61; Turner, 1957; Siegal and Beals, 1960:394-417). That is, although these two units are conflicting political groups, they are corporate groups selected by residence in a community rather than by leaders relying on diverse principles (Nicholas, 1965:27-9). By analogy, each village may be viewed as a social organization like a university and the li as the Big Ten Conference in which the units cooperate in academic and athletic affairs although each is in competition with all others for prestige. The present combinations of villages are congruent with the former division into two pao which were in competition with each other for prestige. In spite of various leadership changes, it is not likely that the competition between villages will ever disappear although the combinations of villages may give way to a series of shifting alliances for the combinations based on old pao no longer have the corporate identity of the village.

However, there is another pair of factions dividing the li which more closely approach the model described in

traditional analysis. These two factions are related respectively to two definitions of the main role of the mayor. One faction favors an internal emphasis: the mayor should focus on the local community and its internal affairs and the community should be relatively isolated from the wider society. The second faction favors an external emphasis: the mayor should be a bridge between the community and the wider society by serving to increase the influence of the li in the township and other governmental or quasi-governmental units.

As is usual, membership in each faction is recruited around a leadership core and by means of a variety of appeals. Nevertheless, there are a number of socio-economic factors which help to distinguish between the respective members. Comparatively, in the United States, income helps distinguish between Republicans and Democrats, but income is not an absolute criteria for such social factors as religion, race, ethnic identity, and regionalism as well as the personal history of the individual may modify any factor or combination of factors. Similarly, in Talei Li, although each faction has a general ideological basis, there are multiple factors influencing identification.

I have employed the label "traditional" for the faction favoring an internal emphasis because the kind of role it favors for the mayor seems more consistent with traditional local leadership patterns. Its members believe

the mayor should promote internal harmony, push local affairs, be a good advisor, and be chief mediator in disputes. It is felt that this requires an older landowner and farmer who will be respected and heeded. The members of this faction tend to be older and engaged in agriculture. The leadership is nearly identical with those who are most active in temple affairs and draws a larger share of its membership from the Sanlei end of the li.

I have employed the label "progressive" for the faction favoring an external emphasis because the kind of role it favors for the mayor seems more modern. Its members believe the mayor should establish and maintain good relationships in town, at the farmers' association, and with various other government units. Since the leaders in most of these outside units tend to be educated, worldly, and young (under 45), a mayor with similar characteristics would be facilitated in the establishment of good relationships. As might be expected, the general membership of this faction is younger and a significant percentage are engaged in non-agricultural activities although most leaders own land.[4] Also, most leaders and a larger share of the members are from Erhlei and T'oulei.

At the time of the study, the mayor (li chang) was from Sanlei, a sixty-two year old member of the "traditional" faction which had a slight numerical advantage in the li. The former mayor lived in Erhlei and was a member

of the "progressive" faction. In the last election, each faction had entered a candidate for mayor and one for representative to the township council while a third mayoral candidate ran as an independent. In the weeks before the election, after much discussion and campaigning, it appeared the "traditional" candidate for mayor would win. Therefore, it was decided by the process of consensus previously discussed, that everyone should cooperate in his election and also, in accordance with the principle of shared prestige previously enunciated, elect the "progressive" candidate for representative who lived in T'oulei.

All candidates slated to lose save one attempted to withdraw, but only one, the independent, actually did withdraw. Both the government and the Kuomintang are encouraging free elections rather than consensus as a basis for selecting officials. Since an election which has only one candidate as a choice fails to give even an appearance of free elections, these outside units make it difficult for any candidate to withdraw once his name is up for an election. The former mayor who was then the "progressive" candidate for re-election did not cooperate in the compromise and continued to campaign but was badly defeated. Many villagers said the defeat was so bad because he was an unreasonable man who refused to cooperate. Although he

campaigned a year later for a farmers' association office, he won neither the regular job nor the runner-up job. He will likely be elected to some office again when he gets a little older; in villager terms, when he has had more experience.

The basic ingredients then for membership in a faction are occupation, age, and to a lesser degree, residence in one end of the li or the other. However, leaders also tap kinship loyalties, business relationships, friendships and sworn brother associations in collecting adherents. Many people cannot be identified as members of either faction because the less affluent who are so dependent on others might be in a precarious position if a faction with which they were strongly identified lost an election.

Women do not significantly participate in local politics although villagers are aware of certain important women at national levels. Although many village women do vote as their husbands expect, the percentage favoring the "traditional" faction is higher for women than for men. It seems there are enough female votes to swing any election. Several women explained that when the "progressive" faction was in control, more village men went to town more often and spent more money. Since they would prefer the men to stay home and save money, many women seldom vote for the "progressive" candidates.

On one level, local politics can be seen to operate in a manner not unlike the system portrayed for a segmentary lineage system (Evans-Pritchard, 1940). In agnatic groups, the principle of segmental opposition functions such that there are a series of linked groups arranged in a hierarchal structure much like a modern organizational chart. The higher the level in the organization, the greater the number of underlying units which are connected. In any conflict or other sort of political action, one side gains support from every group to which it is linked up to the apical point which links it to the opponent's side and *vice versa*. As an aid to understanding, picture the form required in a formal English outline. An 'a' and a 'b' may be in conflict with each other but they unite when the '1' under which both are subsumed is in conflict with '2'; similarly, '1' and '2' drop their conflict when the 'B' under which both are subsumed is in conflict with 'A'; and so on for 'A' and 'B' when 'I' is against 'II.'

In applying this concept to Sanlei, note that there are two groups in conflict within the village, the "progressives" and the "traditionalists," although the latter is dominant. At the *li* level though, the whole village tends to unite and act as a single unit in opposition to other villages or to combine with the villages which once comprised one of the two former *pao*. Then, at the township level, Talei Li has been a member of the same regional

faction (discussed later in this Chapter) for several years although, as previously stated, the li leadership changed from "traditional" to "progressive" and back. The internal differences are relatively swallowed so as to present a united front at each succeeding level.

Local Officers and Procedures

The mayor is responsible for organizing corvee labor for civic improvement. He is also extremely influential in li-wide social and religious affairs for, although each of these has its own independent organizing committee, he is often an ex officio member and is usually an important advisor. It is helpful if the mayor has good relations in town so that political figures will be sympathetic to the community. For example, when an assessor is sent from town to lower taxes in the event of a natural disaster, it is considered best if he already has positive feelings towards the village and a friendly attitude towards village leaders.

As can be seen from the above requirements, the mayor must be a persuasive man to be truly effective. Basic qualifications for office include literacy and fluency in Mandarin. Although there are no wealth requirements for office and Talei Li has never had more than one resident whose primary income was derived from rent, no poor man such as a farm laborer has ever held a high

office. There are two reasons for this: since a minimal level of wealth is considered to indicate ability, a poor man is probably not very able or intelligent; and since leisure time at odd moments is required to conduct political business, a laborer probably does not have control over his working hours to the degree of self-employed men.

Rather than the expensive personal entertainment of visiting officials by the mayor who provides food and drink which is characteristic of some communities, Sanlei residents and the li in general, invite external officials to the community parties, weddings, and sworn brothers' association dinners. This custom probably developed because of the absence of landlords who might have been able to afford the expenses out of their own pockets.

The second officer is the representative to the township council. All the above qualifications described for the mayor are equally relevant for the representative except that he much less often acts as a mediator in village disputes. His official duties are as a legislator rather than an executive and his job stresses external relations by its nature, even when he is a member of the "traditional" faction.

The final local official is the village secretary who is appointed by higher level authorities rather than elected by the community. He operates out of the township office with major responsibility for taxes, household

registration, village records and the draft. He assists the mayor in maintaining records and visits Talei Li once or twice each week. Most li secretaries are young and reasonably well educated. Talei Li's current secretary is a young normal-school graduate having completed two years of college.

In spite of the above formal procedures, there are still elements of traditional local control. Taxes are raised rigorously with legal penalties for non-payment much like they are in the United States but there are significant differences on another level. For example, the li needed a major repair to a bridge and the li school required an additional classroom. Procedures for acquiring these items were identical, a combination of formal and informal taxation. Out of the regular taxes, higher level government units agreed to match locally-raised money to pay for the items. After much investigation and analysis and many community meetings, a certain sum was declared to be required for each project. The mayor and lin chang distributed assessments to village households on the basis of wealth and ability to pay. There is no fixed basis for this distribution. The committee talks about who can pay what based on their reputation and since everyone knows a lot about each other's financial situation, this is fairly easy. The general analysis is based on land holdings, size of family, and income, but special

allowances are made for those who have had a heavy recent expense such as a wedding. The range of assessments was from $2.00 to $100.00.

The lin chang collected the money and gave it to the mayor to deliver to the government. This was all done informally, i.e., no legal pressure could be brought on an individual who refused to contribute. There would be community pressure for by refusing to cooperate a man would be failing his neighbors. In a close-knit community, one never knows when cooperation is needed; a poor man needs employment, and a rich man must hire laborers and at critical periods, the area has a slight to severe labor shortage.

Some social welfare support trickles into the community from outside through various governmental levels and even through missionary groups which distribute United States government surplus. Other welfare is on the basis of kinship. However, the local community does assume limited responsibility for its own indigent on a community basis as previously described. There is a proverb, "A good neighbor may be more important than a distant relative" (see Glossary C).

The Farmers' Association

The Farmers' Association is a quasi-governmental unit which operates as an important link between farmers

and the government. Sanlei villagers feel the Farmers' Association is their own organization, not a mere branch of governmental bureaucracy. In this regard, it is perceived as a successor to the "Farmers' Associations" of the 1920's (locally developed organizations) which were suppressed by the Japanese rather than the "Associations of Agriculture" which were created as official organs of the Japanese Government (Bessac, 1965:21).

Farmers' Associations fulfill a number of different functions. They are a farm credit service with deposit and loan facilities and capital accumulation in the Hsin Tien association is quite large. They provide economic services such as the sale of bean cake, insecticides, farm implements, and fertilizer, and act as a collection agency for taxes in kind and for the sale of rice. They also provide extension services including study groups, home improvement clubs, and 4-H clubs and sponsor model communities and model farms such as that described for the nearby vegetable gardening village. They instruct in new agricultural and sanitation techniques. The one in Hsin Tien helps provide market information for tea growers and recently, developed a form of livestock insurance. Some services are profitable and some lose money such as the necessary activities connected with the responsibility for communicating government directives to farmers. In general, all the activities may be subsumed under general

goals of increasing agricultural production and improving rural life.

Talei Li has its own small unit, a local branch of the Farmers' Association. This unit has an elected "Small Unit Head" from T'oulei and "Vice Small Unit Head" from Sanlei. These two leaders are a nexus between the community and the association. Since they receive no compensation other than recognition, an occasional free dinner, and a magazine subscription, they feel the office is nearly worthless, without money or power. For example, they are required to carry out policy with which they may personally disagree, i.e., currently they are supposed to be encouraging hog production although both they and the average farmer believe that raising hogs is unprofitable.

There are 97 regular members of the Farmers' Association in Talei Li plus 10 associate members. Forty of the members live in Sanlei, indicative of that village's great emphasis on agriculture. Talei Li belongs to the Hsin Tien Farmers' Association which has a total membership of over 1,000. Although each local Farmers' Association is subject to government regulations and directives, there is great latitude for local independence and democratic control. The Association is run by a Board (one elected representative from each li), an Assembly (representatives elected from each li dependent on size of membership), a Watch-Dog Committee (auditing supervisors

elected by the Assembly), and a General Manager hired by the elected officials. The general manner of operation is not unlike that of American communities with a council and a "City Manager" system.

Farmers' Association Factions

Competition for the Farmers' Association General Manager's job is very keen. There are two major factions in the Hsin Tien Farmers' Association which are regionally based in one sense but do carry different policy emphases.

The faction to which Sanlei belongs is called the "Inside the Mountain" group. Its members live in the more remote areas around Hsin Tien and appear to be less urban and more traditional in outlook. They generally feel the Farmers' Association should devote itself solely to direct agricultural activities and to maximizing high dividends.

The other faction is called the "Outside the Mountain" group and contains members who are generally more urbanized and progressive and who favor the recent trend to more extension work by the Farmers' Association and the like.

Individual members belong to units which elect officials to the overall Hsin Tien Association. Although the correspondence between the region and the factional affiliation are not absolute, there is a strong correlation. As the description of the two Farmers' Association factions suggests, they are related ideologically to the

factions previously described within Talei Li. Talei Li is strongly in the camp of the "Inside the Mountain" faction which is similar to the li "traditional" faction. Although the factions are reasonably balanced overall within the li, the "traditional" faction is in overwhelming control of the more restricted membership of the Farmers' Association.

Currently there are 21 members of the association board, 13 from the "Outside the Mountain" faction. Ten years ago, when there were fewer li represented in the association, there were 15 board members, 8 from the "Inside the Mountain" faction and 7 from the other. At that time, Talei Li was in the majority faction but today, Talei is in the minority faction for the recently added li have almost all become members of the faction which was previously a minority. Farmers' Associations have been enlarging their memberships vigorously and according to Sanlei villagers, too broadly interpreting which men are farmers. It did seem to me that some members I met in Hsin Tien were farmers in name only. In any case, the new members seem to favor many policies which are not of immediate direct profit to farmers.

The election of the board member to a term of four years is hotly contested in Talei Li, even more so than the election of the mayor. The member receives an attendance fee of $40.00 for the meetings which average twice

per month. The present board member is from Sanlei and is serving his second term. He has been influential in various kinds of agricultural committees since he was a young man who was once chosen as a farm youth representative to visit Japan and honor the emperor. Six years ago, he defeated the incumbent, the important Erhlei man who was the son of the former bandit chief in a very close election. Two years ago, he badly beat the "progressive" faction member who had been the previous mayor, also from Erhlei. The incumbent's residence in Sanlei and identification with Sanlei's faction helped his campaign. Also, the Farmers' Association members tend to be engaged in agriculture and are more traditional in orientation. The "progressives" are much more influential among li residents in general than among those who are primarily farmers.

There are two additional elected representatives: one is from Sanlei and the other from Erhlei; the latter is the badly-defeated candidate described above. Within the li, Sanlei's faction has an overwhelming majority in the Farmers' Association and could easily control the entire election process. The fact that an outsider holds office once more illustrates the previously introduced principle that there should be balance and harmony. Only the mayor said this explicitly but operations of the system, as demonstrated, strongly suggest it. Several men

claim that every conflict should be resolved and almost everyone agrees that since there are two factions, each should be represented even if one does not have sufficient votes to insure election. This may be partially related to the old belief in consensus rather than majority rule. Additionally, no one should lose "face," i.e., be too embarrassed. The badly defeated man had lost face but gained much of it back by being elected a representative.

Since the above value is important, let me illustrate it in another context. When money is collected for civic improvements or social affairs, some poor people pay nothing and some rich people pay more than their assessment. When names and contributions are posted on the temple, incorrect figures are listed so that everyone is indicated as donating something. Only the committee chairman or the li chang would know the truth about the whole community and the various lin chang or assistant committee chairmen would know the truth about their own neighborhoods. Thus, face can be saved by the poor although richer villagers are not earning deserved levels of prestige which are related to the size of the donation. Someone who did not pay an amount commensurate with the committee opinion would be so posted and thereby, lose face. The threat is so great that it has happened only once in Sanlei in the past twenty years.

The above discussion may falsely suggest an idyllic view of life in Sanlei, all peace and harmony, whereas actually, there are many violations of the underlying principles such as have already been pointed out, i.e., the man who refused to accept a consensus, and others will be discussed later. The man who refused to contribute his proper share to the temple committee has a reputation for cheapness, has a little more difficulty hiring workers during the busy season (his bonus of a meal is considered likely to consist of poor and cheap food), and he was insulted in public by the gods at the last major celebration (see Chapter VII). The mayoral candidate who refused to cooperate with the general consensus was badly defeated for mayor and also for the next office for which he campaigned.

The Fruit Cooperative

Taiwan has six Fruit Cooperatives, primarily marketing organizations although minimal levels of guidance and assistance are also provided. These cooperatives are all continuations of Japanese-established organizations. Talei Li belongs to the Ch'i Chang branch, one of six branches in the Taipei Fruit Cooperative which specializes in citrus fruit.

As farmers in Talei Li have taken up citrus cultivation, they have regularly joined the association.

Currently, the 66 members, 31 from Sanlei, constitute an all-time high reflecting the previously described change to citrus cultivation. Four representatives serving three-year terms represent Talei Li, one from T'oulei, one from Erhlei, and two from Sanlei, another equal balance of factions. These representatives meet with others in Ch'i Chang to elect 20 of their members to represent them at the Taipei (main) level. At the Taipei level, 111 representatives elect a 25 man board which selects the general manager.

The fruit cooperatives are much larger than farmers' associations, the election process is more indirect, and the organization is less responsive to its membership. However, its management has generally been excellent, distributed profits are good, and marketing is efficient. No Talei citrus farmer has failed to join the cooperative and each markets most of his crop through the association.

Education

Talei Li has its own six-year primary school located in Erhlei. Under Japanese rule, students walked to the Pouti school. In 1955, a branch of the Pouti school was established in the li, and in 1964, it was granted independence. Currently the school has a principal, twelve teachers, and a janitor. There is no clerk but one will be added when the school gets bigger. Two hundred Talei

Li families send a total of 423 students to school, over 98 per cent of the eligible residents in the li, with girls constituting a slight majority over boys.

The Sanlei school is not highly rated. During the first four years students attend only half day and the last two years only permit full days. Admission to junior high school in Taiwan is by competitive examination except for expensive private secondary schools. Successful completion of the examination usually requires six years of full day classes plus a considerable amount of evening classes and individual tutoring. Though illegal, the majority of island schools provide these extra programs for a fee. Talei's school does not and this is one of the reasons why the Mainlander children in Wulei travel to Hsin Tien to school.

Villagers do not yet fully believe in the efficacy of education. They point out that most junior high graduates do not earn more money than elementary graduates. School teachers, for example, earn less than most miners and many farmers. For example, a rich farming family with four sons in T'oulei sent the youngest to college and he is now teaching in a Hsin Tien school. Although he brings some prestige to his family, his three farming brothers supplement his salary. In its history, Sanlei has had only one high school graduate and two junior high school graduates and only one of these graduates earns more

money than an average farmer.

Taiwanese schools are rated comparatively like American universities. An important key to the quality rating is the percentage of graduates who take and pass the examination. It is this factor that makes the Talei school so low in rating.

Although education is essentially free, there are a number of fees such as those for the Parents' Association, various taxes, and school supplies although text books are provided without cost by the Ministry of Education. Fees total about $40.00 for the first and second grade, rising in steps to $60.00 for the sixth. Since an experienced farm laborer earns $50.00 per day, the fees are not really high but not inconsequential either, especially if there are many children in the family.

The local community has little influence on the selection of the school staff which consists of outsiders, primarily Mainlanders. Only two live in Talei Li while most of the others live in Pouti, a larger more sophisticated community. The staff tends to be an integrated group who feel greatly superior to villagers.

Relations with students are usually harsh and "secondary" rather than "primary," i.e., not intimate (Cooley, 1909). This relationship is considered proper by educator and villager alike. Indeed, according to villagers, a teacher must look and sound "fierce" if he

is to do an effective job.

There are ten officials of the Parents' Association, two from each village in the li. This unit is somewhat similar to the American P.T.A., but much more powerful for it raises money for school affairs such as additional class rooms by means of the previously described informal process. It is important for the school principal to have a good kan-ch'ing[5] (emotional relationship or feelings) with the Parents' Association.

The procedure for electing Association officials contains many elements of traditional politics. Students bring home the list of candidates selected by a nominating committee of school and association officials. Each household rather than each individual has one vote, entered by stamping the family chop[6] next to the name of the desired candidate. Slips are returned to the school and counted by the committee. Thus, the ballot is not secret and choices are usually determined by consensus before voting begins. The association board meets at least once per month with the principal and periodically, there are open meetings for the entire membership.

Instructional methods are traditional, i.e., there is great emphasis on rote memorization with classes chanting lessons in unison. In traditional terms:

> the word education . . . in the Chinese language is not restricted . . . to the acquisition of

> technical skills designed to make a living, but comprises the Renaissance idea of the "whole man," including moral behavior; attitudes towards fellow men, relatives, and country; public responsibility; and so forth (Suyin Han, 1966:97-8).

This is still an appropriate description of the local school curriculum. There is little emphasis on technical skills other than reading and writing as compared with the amount of time devoted to moral behavior and proper political ideology. Physical training--exercise and games--to develop the body are now included, particularly on Saturday mornings. The school has achieved some success in tag ball competition with other schools. The teams include both girls and boys for separation of sexes in school does not begin until the junior high level.

Interest in education is growing, now much stronger in the progressive li faction of Erhlei and T'oulei. The government is in process of implementing a plan for nine years of compulsory education and when it is promulgated, Talei Li children will attend in spite of the fact that villagers do not believe in the value of education for most people. "When the government makes a decision one should smile and obey. To protest is as worthless as a mosquito biting a water buffalo's horn" (see Glossary C), was the statement of the old store owner, an important traditional leader, to a group of senior citizens when asked by one what should be done about the recent increase

in taxes. The phrase indicates the general attitude towards the government.

Social Control

This section deals with the formal agencies of social control, the police and courts, and the quasi-formal agencies, elders and mediators. However, much of the rest of this dissertation deals directly or indirectly with informal social control. Although an individual may gain much from his membership in a social organization, he always pays the price of an acceptance of limitations on the freedom to do as he pleases. Social control comes about in part because people are dependent on one another. Two sociologists (Broom and Selznick, 1968:17) once wrote, "The way men behave is largely determined by their relations with each other and by their memberships in groups."

As is clear from the description of Sanlei Ts'un presented so far, no man is socially isolated. According to Durkheim (1897--English Translation, 1951), if an individual is tightly bound into a highly integrated group with a strong sense of solidarity, he accepts the values and norms of the group as his own. This is perhaps an ideal type not to be found in reality, but Sanlei would approach this end of an ideal continuum. Most social control is achieved by informal means of one type or another.

The outside agencies of control are the police, courts, and army which are all regarded as legitimate by

villagers but to be avoided if possible. "When two men go to court, both always lose," (see Glossary C) is a statement often repeated by villagers. Sanlei's usual direct contact with the police is through its own local policeman. Taiwan has a national police force organized like an army and divided into districts and branches. The closest branch office to Talei is in Pouti, a subdivision of a higher level unit in Hsin Tien. The policemen and their families, primarily Mainlanders, live next to the police station, usually spending several years at one place. The Japanese usually had transferred policemen every six months, a policy which did not permit the establishment of close relationships between policemen and villager which is now common in Taiwan. Villagers know the names of many different police officials in Pouti and a number are usually invited to large social or religious affairs in the village.

There is one policeman assigned full-time to Talei Li with a goal of crime prevention rather than detection and apprehension. To be effective, he must establish good relations with villagers. The previously assigned policeman, recently promoted, had been with the li many years and was both respected and popular. The new man, assigned during our stay, was having a difficult time although he was not really responsible for his difficulties for it is always hard to replace a popular man in any capacity.

Moreover, he has little fluency in Taiwanese and since many villagers do not speak Mandarin, he had an especially difficult job communicating. Using another villager as an untrained interpreter presents its own unique problems.

The police are in charge of crime when it does occur although crime is fairly rare in the village as compared with the city. Most crimes in the rural area are classified into two types: external, as when an outsider steals material goods, or internal, as when a resident steals near-ripe agricultural products or dried wood. About half the outsiders are caught and dealt with through the courts. Most of the internal thieves are caught but rarely do the cases reach the courts. Instead, they are treated in the same manner that applies to arguments and disputes among fellow residents, i.e., the thief and victim are merely considered to be two disputants.

Mediation and Legal Processes

Internal disputes are usually settled internally by a process of mediation. A mediator goes back and forth between disputants listening to the respective stories and repeating them. Eventually, the two sides are brought into each other's presence. If a compromise still can not be reached, they may agree to resort to the temple to have the gods make a settlement.[7]

Even outside the village, Taiwan's formal system of civil courts starts with a regular mediation or

arbitration board. The arbitration is not binding and may be rejected by either party in the same manner as in the village. In either case, however, pressure is placed on disputants to accept the recommendations of the mediator. The pressure in the formal system is mandatory, i.e., appearance in a regular court if no agreement is reached and in the local system, is due to the prestige of the mediator if he is a local leader or due to the fact the mediator is a policeman. If the latter cannot settle the case informally, someone is going to be arrested, perhaps both disputants.

Mediation is important for all kinds of local conflict resolution. Mediators are men who are considered wise, reasonable, and respected and therefore, their recommendations are reasonable and only an uncooperative unreasonable man would refuse to accept them. One accepts a recommended compromise or becomes branded as unreasonable and unfair.

It usually takes a while before the mediator makes any suggestion or recommendation. He starts by carrying information back and forth between disputants and is also persuasive for both sides. Elders are usually mediators but qualities other than age are also necessary. Since a mediator must be vigorous, very old men can seldom serve. Mediators should also be reasonably successful and have a reputation for honesty and integrity. Finally,

they must be skilled in inter-personal relations and since it takes time to build a reputation which includes all these specifications, particularly the last one, most good mediators are between the ages of 50 and 60.

The entire legal process in China, both formal and informal, seems to be more concerned with "reasonableness" and "fairness" than with hard definitions of "right" and "wrong." Decisions do not seem arbitrary and have a high level of predictability.

There are a number of kinds of local participation. Special mediation boards are created for special purposes such as dealing with disputes generated out of the various Land Reform Acts. A dispute between an owner and tenant over land illustrates the concept of justice. A villager owned .3 chia of paddy land which he operated primarily with hired labor while practicing a trade. He was drafted into the army and leased the land to another villager with several small children. The lease was up, his service was completed, and he wanted the land back although he was still unmarried and practicing his trade, but the tenant was poor and needed the land. Although technically the owner should have obtained the land, the board, recognizing the needs of the tenant, decided the lease should be extended for three more years. The lease is due to end again next year and there will be another board case because both parties still want the land. Since the owner

is not married and still earns a good income in his trade and the tenant is still poor with small children, the same outcome of another extension is expected. But since the owner is seeking a wife, he plans to argue that he too will soon have small children to support. He does not expect to regain possession of the land but rather, to minimize the term of the extension and set the stage for eventual control of the land after the next lease termination. The owner is annoyed but does not feel the decision was unreasonable. Other villagers agree the owner had the law on his side and a legal claim to the land. Nevertheless, they too agree the decision was the only "fair" solution. The owner and tenant are neighbors and although there are some hard feelings, overt expression of them was not observed.

There have been few formal arrests of villagers and few occasions in which villagers have appeared before a criminal court. The son of a villager with a repair shop in town is serving a six-month sentence on a bad check charge which he claims was caused by someone who stole his "chop." Another villager was arrested twice for being drunk and disorderly in Hsin Tien and each time, spent the night in jail. In addition to a small fine, he was forced to listen to a stern lecture which caused him a great loss of face.

Interpersonal Relations and "Face"

There is seldom a "face to face" confrontation where someone directly informs another he has done wrong or is a bad man. Instead, there is considerable gossip so that a criticism soon trickles back to the accused. A villager took a turtle-dough cake home from a religious festival and incurred an obligation to return a larger cake the next year which he failed to accomplish. The temple committee members told many people about the failure but would not confront the transgressor in person. The committee posted two lists on the temple bulletin board, one specifying those who had taken home turtle-dough cakes and the other, those who had returned cakes the next year. Although a cursory comparison of the two lists would quickly reveal any violators, the committee claimed they just could not post a list which separately listed those who had refused to return turtle-dough cakes. This concept of "face" with a requirement for both avoiding giving offense and helping others to avoid giving offense does minimize the occurrence of conflict by discouraging the open expression of differences or criticisms.

"Face" does seriously hamper interpersonal relations on another level in spite of its employment in promoting harmony. It is necessary that one does not give offense and it is equally necessary that one helps

to prevent another from giving offense. Because a flat no to someone by definition necessarily gives offense, there are special problems in asking for a job, hiring a laborer, or extending a dinner invitation for it is necessary to do considerable hinting before a direct question is asked. When an invitation to dinner is extended formally, both parties are clearly aware that the invitation is coming and the answer will be yes. If the clues were misinterpreted, one accepts the invitation and then just does not show up. Not to show up after accepting is an insult but is not on a face-to-face basis and therefore, is not as serious. No excuse will be given later and the host will never mention it. Many dinner invitations are not extended until a few minutes before dinner. According to Chen Shao-hsing, the Chinese "yes" often has two meanings, one an affirmation, the other a polite refusal (1963:58). The closest analogy in American culture is the hiring process described by Caplow and McGee (1962) for some university positions, particularly those of higher ranks. The professor indicates he may be available while the university indicates it may have an opening. After considerable discussion, an offer may be made. However, a firm clear offer is rarely tendered without an understanding it will be accepted.

In Riesman's terms (1950), the "tradition directed" social character is predominant for Sanlei with the

community as the main agency of socialization and shame, the psychological mechanism promoting conformity. This is explored more fully in the chapter on the life cycle, but elements are important for this discussion. Tradition is important. Some people, particularly older ones, are considered to have such expertise with regard to cultural norms that acceptance of their authoritative interpretation of norms is frequent and natural. For example, a recently married woman wanted to go see her sister's new baby but knew there was some avoidance rule involving brides and babies. After learning from an older woman that a bride brought misfortune to a baby less than 30 days old, she willingly accepted the ruling and did not even seem disappointed. In many cases, there is this quite willing acceptance of custom for its own sake.

In summary, it appears that women are not significant on an overt level for social control in the contexts discussed in this chapter. They do not really participate in formal rule, politics, or most political units. Their effects are more covert. They influence men and are extremely significant in the socialization process which builds into individuals the internal mechanisms of social control.

CHAPTER V

KINSHIP

According to Marion Levy (1967:67-83) perhaps the most significant feature of traditional China was that it was family oriented to an overwhelming degree. The family was an overriding focus for individual loyalty, the basic unit for production and consumption, and finally, the basic unit in terms of which the allocation of power and responsibility took place. Further, the family was a basic building block in larger agnatic groups. Implicit in Levy's discussion is the importance of kinship in village life.

Although kinship units in Sanlei Ts'un are a significant factor in the social life of the village, the above picture exaggerates their importance. Even Marion Levy points out (1967:69) his description is an ideal seldom approached by the peasant. Since Sanlei is a peasant village which does not contain any wealthy individuals, it would not be expected to approach the ideal. Yet, kinship groups are singularly important in village social life.

This chapter provides a picture of the family and larger kinship organizations in Sanlei Ts'un. The Chinese system is usually classified as patrilocal, patrilineal, and patriarchal (Murdock, 1967:194-7). Religious values, particularly the worship of ancestors, support continuation of the family along the male line.[1] Families are combined into larger agnatic groups. Although these general values are important, it will be demonstrated that compromises are often made with some aspects to achieve others which have higher ratings. Birth, marriage, and adoption are all processes which can be used to create and enlarge kinship units. We shall see how family units use these processes strategically to achieve certain goals.

The chapter will begin with a description of the nature and distribution of family types in Sanlei Ts'un followed by a consideration of the nature of the role of family head, particularly with reference to sex differences. A discussion of the forms and processes which change the family composition and their present distribution in the village completes the static picture of the family. There follows a dynamic view of the various types of family life cycles in Sanlei which draws on specific underlying values in the village, the cultural processes available, and the demographic factors affecting Taiwanese

village populations. Finally, the structure and function of larger agnatic units are considered.

Family versus Household

According to Lang, the economic family, the chia, is a "unit consisting of members related to each other by blood, marriage, or adoption, and having a common budget and common property" (1946:13). The chia is sometimes contrasted with the household, the hu, which could include such temporary residents as more distant relatives, servants, or workers. If common-law marriages are included along with regular marriage since they are so accepted in the village, the chia and hu are always identical in Sanlei Ts'un. Both the Sanlei villagers and I agree that the chia and hu in Sanlei are identical, consisting of the group who live together, share economics, and cook and eat together as a regular practice.

Household Registration

Formal population registration is required for all people in Taiwan. Sanlei records are maintained in the township office in Hsin Tien. The record, which is maintained by hu as the unit of registration, includes an identification number, the address of the family, the name of the head of the household (chia chang), and a brief history of the family including such information as relocations, divisions, etc. For each individual in the

family, there is listed an identification number, relationship to the chia chang of the household,[2] birth order differentiated by sex such as second daughter or first son, date of birth, spouse's name, father's name, mother's name, occupation, amount of education, and personal history such as date of marriage and spouse's name, reasons why someone leaves or joins the household, cause of death, army induction and discharge records, etc. A household registration certificate is kept in each household to which a personal registration card is related for each member of the household.

It is required by law that all status changes which would affect these records be reported to the township office. Such changes include the relocation of the family, births, deaths, adoptions in or out, marriage in or out, family division, etc. However, the records are only of limited value to an anthropologist or demographer because of the many discrepancies and their incompleteness.

Although false registration is a violation of the law, a major problem in using records is caused by the fact that people are not living in the household in which they are registered. Once every five years or so, during a single night, the government conducts a major census and checks registrations. Except for census takers and some necessary vital personnel, military, police, medical, etc., everyone is restricted to their official registered homes.

For the two days preceding and the two days following the census, the transportation system for the entire island is overloaded with people traveling to and from their official residences and the place where they actually reside.

There are various reasons for the failure to register significant changes. Since an old cultural value maintains it is best not to bring yourself to the attention of government officials for any reason, registration acts are avoided because they necessitate contact with government officials. Another error derives from the prestige associated with the large extended family, ta chia ting. A family may actually have divided with one branch migrating to the city, but if the division is not officially registered, the family can maintain a pretense that the move is temporary and the family has not really divided. Conversely, there were two factors causing some families to divide on paper but not in fact in spite of the high values associated with the extended family. By dividing into smaller units, they hoped to retain land in the various land reform processes and further, hoped to obtain draft deferments. The confusion and misinformation which was rampant at the time of the various "Land Reform Laws" caused a final form of over-registration. Some small landlords who lived in the city or a town migrated to the village officially, on paper but not in fact, in order to

maximize the possibility of retaining their land. In summary there is both under-registration and over-registration and although the absolute number of people by actual residence and official records is quite similar, they differ considerably in specific characteristics. Total Sanlei errors are similar to these found in a sample survey of a community north of Taipei: 11% registered but not living in the community and 5% living in the community without registering (P.K.C. Liu, 1967:17).

Information regarding individuals is also frequently inaccurate; the categories of education and occupation are the most misleading. Birth and death records are quite good. Marriages are official only if recorded, but several common-law marriages have been recognized by participants and fellow villagers although the couple are only listed as "living together" in the official records. Common-law marriages may be legalized eventually, in one case after 13 years. In one extreme case a "Liao" separated from his wife who still lives in a nearby village. He has been living with a different woman in Sanlei Ts'un for the past 23 years and they are listed in the records as just living together. They have six children, each registered under the woman's surname with the space for father's name left blank. About two to three months after birth, the man officially adopted each child, changing the surname to Liao. Practically, the couple behave as if

married, are so considered by villagers, and the unit constitutes a family in village affairs even if not officially registered. In this example, the couple claim that it is less onerous to live together and adopt the children than to obtain a divorce and remarry because marriage to someone who is divorced is negatively evaluated. (The way I first learned of two of the three cases of marriage where one partner had been divorced was through a check of official records.) Although the man said it was not a factor, the fact that the brother of the first wife was the sworn brother of the man in the example cited above may have been important. I was not able to obtain agreement about the significance of this point.

In the discussion to follow, the actual residence patterns based on the field census are used rather than official records. A family is included in the village if a majority of its members sleep in the village a majority of the time. A family officially registered as divided but in fact living and cooking together as a single unit is counted as a single unit (one case). Conversely, a family which had not divided officially but was living and eating separately in two or more units was counted as more than one unit (two cases). An individual is considered a resident if he regards Sanlei as his home and he sleeps in the village at least one night per week. Thus, a girl who works in a factory and sleeps in a dormitory but usually

spends one or two nights at home is a resident. On the other hand, a boy in the army is not a resident.

With the above standards, as of September 1, 1966, the actual population of Sanlei Ts'un was 409, divided into 66 households, an average household size of 6.2 members.

Family Types and Distribution

The villagers believe the patrilineal extended family (ta chi ting) is an ideal. In any discussion, the largest family in Sanlei is often used as an example of the best family and the old father, Liao Mou-tu, who is still the chia chang is held as a model of sagacity and wisdom. A diagram of his family, a single economic unit, appears in Figure 5. This example approaches the maximum for the definition. An extended family[3] usually contains at least three generations although this is not a defining characteristic (Lang, 1946:14). Minimumly, to be classified as an extended family, there must be at least two marriages in the same generation or in non-adjacent generations. An absolute minimum size extended family would have four members: two brothers and their respective wives. The family may be broken but still meets the minimal definition, i.e., a marriage counts even if one partner is dead. There are eight extended families in Sanlei, 12.1% of the 66 households, ranging in size from 6 to 19

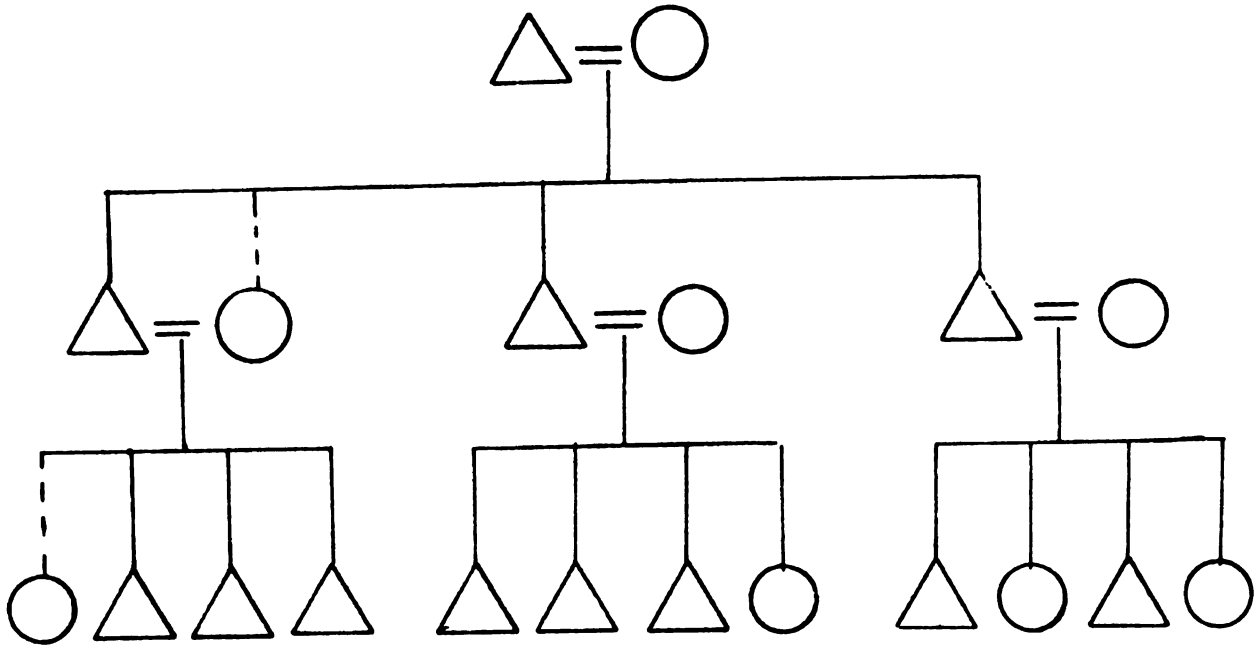

Figure 5. Kinship Diagram, Liao Mou-tu Chia.

members with an average size of 8.1. 19.8% of Sanlei villagers are living in households of this type, ta chia t'ing (see Table 6).

A second type to be found in Sanlei is the stem family. The stem ranks between the extended and nuclear families in complexity. In accordance with Lang's definition (1946:14-15), there must be exactly two marriages in adjacent generations with one person from each marriage related lineally. In numbers of people, the minimum could be three, a married couple with one parent alive. The stem family deserves its special status because it tends to be a transitional form, rarely having permanent status. For example, when the first son marries and brings home his wife, a nuclear family becomes a stem family. It remains

Table 6. Summary of Household Types in Sanlei Village

Type	Families		People		Size	
	No.	Per Cent	No.	Per Cent	Mean	Median
Extended	8	12.1	81	19.8	8.1	8.5
Stem	25	37.9	166	40.6	6.6	7.0
Nuclear	33	50.0	162	39.6	4.9	5.0
TOTAL	66	100.0	409	100.0	6.2	6.0

a stem family until either the son establishes a new residence resulting in two nuclear families, or both parents die, or until the second child marries and brings home a wife creating an extended family. There are 25 stem families in Sanlei, 37.9% of the 66 households, ranging in size from 3 to 14 members with an average size of 6.6. 40.6% of Sanlei villagers are living in households of this type (see Table 6).

The final type of family is the conjugal or nuclear, the most elemental and simple. It consists, at a maximum, of a married couple with their unmarried children or at a minimum, of a single person living alone (Lang, 1946:14), the latter example perhaps stretching the concept of family to its ultimate absurdity. Including the three households which contain men living alone, there are 33 nuclear families, 50.0% of the 66 households, ranging in size up to 9 members with an average of 4.9 members. 39.6% of Sanlei villagers are living in nuclear households. If

the three single men are omitted, the range in size is from 2 to 9 with an average of 5.2. The distribution of these three family types is indicated in Table 6.

Historical Changes in Family Size

Historically, there has been a steady growth in the average size of the family in Taiwan (see Table 7). There is an additional factor however, which is not revealed in the kinds of data usually presented. There is an increasing percentage of stem and extended families at the expense of nuclear families in the rural area. While the average size of the family in Sanlei Ts'un is about the same as Taiwan's overall figure, it is significant that sixty per cent of Sanlei villagers are living in households larger than the nuclear family. Several explanations for this development can be suggested.

One reason is related to a concept recently developed in a provocative article by Marion Levy which was supported mathematically by Ansley Coale (1965:1-69). Levy draws on the work of demographers who posit a demographic transition characterized by three stages: (I) high birth rate and high death rate, (II) high birth rate and low death rate, and (III) low birth rate and low death rate. Levy argues that in Stage III, the "actual" family is the nuclear type. A nuclear type is necessary because of the restraints imposed by the larger society.[4] Moreover, the "ideal" size will be congruent with the "actual" size.

with
unit
facil
alon
vast
will
Coal
famil
bent
i.e.
seri
crea
an
was
of

Whi
acru

Table 7. Historical Changes in Average Family Size in Taiwan (1940 and earlier from Barclay, 1954:175; later figures from United Nations Statistical Yearbook, 1968:787)

Year	Average Size	Year	Average Size
1905	5.2	1935	5.8
1915	5.3	1940	6.0
1920	5.3	1950	6.1
1925	5.5	1960	6.1
1930	5.7	1965	6.3

In Stage I however, the "ideal" type may be any form with a tendency towards something larger than a nuclear unit but because of the high death rate, there will be few families which achieve this "ideal." The biological facts alone are sufficient to prevent its achievement. Thus, a vast majority of the "actual" families in a Stage I society will be nuclear no matter what the "ideal" may specify. Coale (1965:65-69) created a computer simulation model of family cycles with all conditions set to maximize achievement of unilineal extended families in a Stage I society, i.e., families would not divide unless both members in the senior generation were dead. Yet, these conditions only created an average family size of 7 while the average for an "ideal" of nuclear families under the same conditions was 4. Since we know that families do divide for a number of other reasons, even this figure would be rarely realized.

However, it is Stage II, the transitional stage, which is of most interest in this paper. In Stage II, the mortality rates are changing such that they would now

permit the "ideal" to be achieved biologically. Yet, there will now be pressure for a change in the "ideal" size[5] towards a nuclear family because other conditions are approaching congruence with those of a Stage III society. In any case, we would expect both an increase in the average family size and an increase in the percentage of families that approach the "ideal" form in a Stage II society.

The above argument will be applied to Taiwan. The data in Table 2 clearly indicates that 60 years ago, Taiwan was a Stage I society, possessing both a high birth rate and a high death rate. Furthermore, they also indicate that Taiwan slowly changed to a Stage II society, which was achieved after World War II because of the falling death rate. Finally, Taiwan now appears to be moving towards Stage III as indicated by the falling birth rate. The figures in Table 7 indicate that the average size of the family steadily increased with the changes in stages as Levy's theory would predict. Moreover, Sanlei now has its highest percentage of families larger than the nuclear type: stem and extended forms total 50% of the families in Sanlei.

However, there are two other possible explanations for the current growing family size and high rates of families larger than the nuclear form. In a study of Hsin Hsing village on Taiwan's West Central Plain, Gallin

(1966) found that only 40% of the families were larger than the nuclear type. In both Sanlei and Hsin Hsing there was pressure on the land although the availability of yet undeveloped mountain near Sanlei meant less pressure. Additionally, the growth in population (associated with the falling death rate) meant that some people were forced to seek employment outside the village in both communities. In Hsin Hsing, it is often necessary to migrate to the city for a job (Gallin, 1966:210). However, the availability of work in the mines and the availability of work in the city within community distance means a man can work outside but continue residence in Sanlei Ts'un. For example, the extended family of Chiu Yung-man which is diagramed in Figure 6 includes four adult males although the family land holdings are not sufficient to support the entire group. The old man (1), is a full-time farmer although he has withdrawn to a large degree because of his advancing age. His oldest son (2), works about 80% of the time on the family farm and 20% in the family store run by his wife (3). The second son (4) works about half the time on the family farm and half the time in the coal mine. The third son (5), who is a full-time truck driver at a lumber yard in Taipei, commuting daily, rarely assists with farm activities. The family farm requires male labor inputs totaling about the equivalent of two full-time adult males and could support their respective elementary

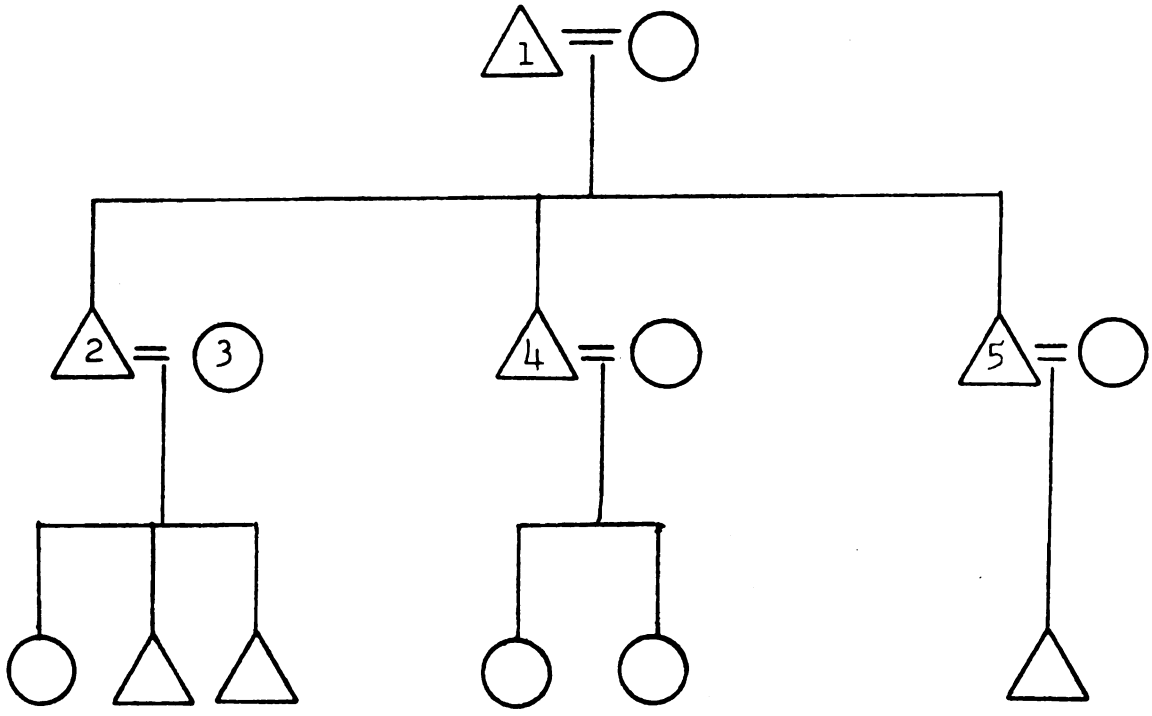

Figure 6. Kinship Diagram, Chiu Yung-man Chia.

families. However, the other employment opportunities locally available allow this extended unit to continue living in a single household. On the other hand, in Hsin Hsing, it is likely that the youngest son would have had to move to Taipei for work. His wife might not have moved with him, but given the fact that three adult males still meant too much pressure on the land, and that he had obtained a steady job with good wages, she would probably have joined him before long.

The final possible explanation is based on the improving financial conditions in Taiwan.[6] Most accounts of the Chinese family stress that the large form is related to economic well-being (Hsu, 1967:7; Fei, 1939:29, C. K.

Yang, 1959a:9, Lang, 1946:16). It may well be that neither the biological explanation nor the convenience of job opportunities are relevant for if the theories about economic improvement are correct, they may be a sufficient explanation.[7]

There are few longitudinal studies of Chinese communities. Gallin found a significant increase in material possessions in Hsin Hsing between the original study of 1958-9 and the restudy of 1966 (verbal communication). The strength of the theory could be examined by looking at the present distribution of family types in Hsin Hsing. There are suggestions that the theory of increasing financial well-being has merit for the increasing size of the family (Table 7) corresponds with economic improvement as well as demographic changes. The final support for this explanation comes from the neighboring village of Erhlei which was studied by my wife. In comparison with Sanlei, Erhlei is more prosperous although the average net worth of each family is less (reflecting the smaller investment in land), houses and material goods are richer and monthly income is higher. In both villages the demographic rates would have changed at about the same rate although Erhlei is making use of modern Western medical treatment to a greater extent than Sanlei. As the theory would predict, the average size of the family in Erhlei is higher and additionally, there is a higher percentage of families

larg

a pr

avex

larg

"sta

tion

tial

to

tion

scr

for

bee

tion

nec

whi

cha

ana

que

Ha

ou

th

a f

(Mo

cyc

spe

larger than the nuclear unit. In another recent study of a prosperous Hakka community in Taiwan, Cohen found an average family size of 10.9 and 55% of the families were larger than the nuclear form (1969:161-180).

The above discussion of the family is basically a "static" one, a snapshot of Sanlei at a given moment in time. Even the discussion of changes over time is essentially "static" because it merely describes and attempts to understand the differences in two or more distributions of family types distinguished by time. Such a description of the incidence and classification of domestic forms is fairly standard in most ethnographies and has been called by Buchler and Selby (1968:48), the "Statistical Approach." They further suggest (1968:52-8) it is necessary to provide a "Diachronic Approach" in analysis which focuses upon the total process of development and change in domestic units. Although often omitted, such analysis is growing in importance and appearing more frequently in ethnographies (Fortes, 1949; Mitchell, 1956; Hammel, 1961). Some of the impetus for these studies comes out of sociological studies of the American family under the heading, "life cycle of the family." There are only a few studies of the life cycle of the Chinese family (Morioka, 1967:595-606; Fukutake, 1967:13-24). The life cycle of the Sanlei family, a "moving picture" so to speak, will be discussed later in this chapter after the

explication of jural rules, ideal patterns, and strategies to achieve goals.

Family Surnames

The various surnames in Sanlei are indicated in Table 8. As previously stated, Sanlei was founded essentially as a single surname family and the major surname, Liao, continues to be dominant in both number of representatives and socio-political affairs. Counting married women as if they retained their maiden names, 180 people of the 409 in the village (over 44%) are surnamed Liao. Only 34 people (just over 8%) have the second most popular surname (see Table 8).

As can be seen in Table 8, the Liao are even more strongly represented among the chia chang (nearly 55%) than they are in the village overall. Eliminating married women's maiden names, i.e., counting them in terms of their married names, would result in an even greater percentage of Liao surnames (over 50%). Moreover, many surnames other than Liao are connected in some manner to a Liao family. For example, one chia chang named Chien moved to Sanlei some years after his eldest son married a Liao girl from the village and one chia chang named Lin is living with a Liao widow in her house as a common-law husband.

Table 8. Distribution of Surnames in Sanlei

Surname	Number of Individuals*	Number of Chia Chang**
Liao	180	36
Chang	34	5
Huang	29	2
Chien	23	4
Yu	22	2
Chiu	18	3
Wu	14	1
Lin	13	4
Ch'en	11	2
Hsu	10	2
Wang	7	1
Hsieh	7	-
Kao	5	1
Yuan	5	-
Chou	4	-
Chuang	2	1
Shih	1	1
Chiang	1	1
12 Other Names	23***	-
TOTAL	409	66

*Employing maiden names
**Head of Family (see next section)
***No more than 3 people per surname

Chia Chang

The chia chang, head of the family or household, constitutes a significant role in Chinese society. It is formally recognized in official records and in formal village social organization although official records (household registration) and informal recognition do not always coincide. For example, it is expected that men will start to withdraw from active control of the family as they approach age 60, eventually turning all power over to the eldest son, or at least the oldest one who remains at home.

Although some men have strong personalities and resist this withdrawal from active control quite vigorously, others are most happy to comply. Life in the village for the semi-retired old man seems to be most pleasant. Liao Tai-peng, the 72 year old temple caretaker, often states that he no longer has to worry about finances and does not really know his family condition as his oldest son has now taken on the burden of family care. In some cases, a son desires to assume control before his father is willing to give it up. This conflict may be particularly strong as the old man's sixtieth year passes and is often accentuated by the son's literacy and greater knowledge of new crops and techniques derived from the greater contact with the world outside the village. However, because of the strong values associated with filial piety, the son must be most careful not to push too hard and bring down the wrath of fellow villagers. Even when a man yields actual control to his son, there is seldom a change in the official records unless there has been a formal family division (discussed in a subsequent section). Thus, a man may be listed as the chia chang in spite of the fact his son is the effective head. In one case, the official chia chang is senile, frequently wets his pants, and is rarely lucid. He frequently wanders about the village especially in the bright sunshine, until led home by his grandchild.

Of the 66 chia chang appearing on the official records, 53 or 80% are male and 13 or 20% are female. This

latter figure appears high but is consistent with the arguments advanced in this paper, i.e., the structural position of women is not inferior to men to the degree suggested in the traditional literature. It is higher than the 12% chia chang who are female listed by Barclay for Taiwanese households in 1920 and 1930 (1954:182) and also exceeds the percentage in the previously mentioned Shihlin survey of nearly 14% (P.K.C. Liu, 1967:34). In the case of four of these Sanlei female heads, a husband or son is the practical or effective head. In the remaining nine however, the villagers recognize the woman as the effective head by inviting her participation as the family representative in such affairs as village meetings, the parent teachers association, and temple affairs. In six of the nine cases, there is an adult male who would be capable of assuming responsibility. One woman during our stay in the village became the "assistant pot master" in charge of her lin (village subdivision) during the "Fire Purification" ceremony although she had an adopted husband at home.[8]

The birthplace of the current chia chang and the means by which they entered the village are indicative of the nature of village history with its emphasis on continuity. Of the 66, 49 were born in Sanlei and 3 were adopted-in as small children or babies. This means that nearly 80% of the chia chang were raised in Sanlei. Most

people, particularly mature adults, claim that their descendants will always remain in Sanlei. Indeed, the following is one of the arguments used to break up a debate between two villagers before it gets too serious, "Is this argument important enough to have your great grandchildren continue it 50 years from now? Remember they will be neighbors!" (see Glossary C).

Fourteen chia chang migrated to the village, eight from one of the other four villages in Talei Li. As previously stated, the establishment of the government Communication Bureau in Wulei at the end of Talei Li forced the migration of Wulei villagers who settled, for the most part, in other villages in the li with primary attention to Szulei and secondarily, to Sanlei. The other intra-li movement results from the fact that Erhlei Ts'un is more modern than Sanlei and has a higher percentage of its population engaged in non-agricultural economic pursuits. There has been some movement of farmers from Erhlei to Sanlei and the reciprocal movement of non-farmers from Sanlei to Erhlei.

The six chia chang not yet identified all came from outside the li. A retired Mainland soldier who lives by himself and works in a nearby coal mine came to Sanlei merely because he does not want to live in the mine dormitory (it is too much like the army) and because a small rude house was available for rent. The remaining five chia chang all migrated from other villages in the same

township of Hsin Tien. Three of these came from the mountain areas adjacent to Talei Li because of the convenience of the transportation system to town and the presence of electricity in Sanlei but not in the mountain area.

In summary then, of the 66 chia chang, 63 were raised within three miles of the center of the village. This data emphasizes the continuity of the Sanlei population.

Processes Changing Family Size

There are various standard mechanisms for increasing the size of a family unit. Assuming the basic dyadic unit in a family consists of a cohabiting adult male and female, the most common means for adding members is through reproduction. This means is assumed for Sanlei Ts'un and will not be explicitly considered in a separate section of this chapter. Adoption is a process available in most societies to add members who are the equivalent of natural children. Adoption is common in Sanlei but varies in accordance with the sex of the child and with the kinds of relationships established between the two families involved. Members may also be added by marriage which also varies in accordance with the sex of the individual added and also at the stage of the individual life cycle when the marriage process is started and consumated. Any of the above changes must be registered in the official records. If the change is marriage or adoption, it will be reflected in two

household registrations, the home of origin and the home of destination.

Another concept to be considered in family size is the creation of new independent units. In Sanlei, death must be registered but a death never creates a new unit, for any unit continues in spite of membership changes. New units are only created by the process of family division, a formal event which must be registered in the public office. In a division into two or more new units, one of the new units will usually be considered as a continuation of the old. It is possible, however, for a family unit to disappear. As previously stated, a unit may consist of only one person and this unit would disappear with his death or adoption or if the individual married into another unit.

Again, because of the errors associated with the official records, the following discussion is based on data which was gathered through interviews in the village. Marriages were only considered if one of the original partners was still alive and residing in the village. There was at least one interview with each living spouse. There were 94 marriages which met this requirement, but this meant more than 94 interviews for in many cases both partners were still alive. Similarly, adoptions were only considered if one of the original participants was still living in the village. This was usually one of the

adopting-in or adopting-out parents but in a few cases, only the adopted child.

Regular Marriage

There is a traditional ideal form of marriage, one arranged by a matchmaker between two families who are strangers or who are at least not already related, the boy's family slightly richer than the girl's, and with the couple residing permanently in the home of the groom's father. This marriage should occur when the male completes his military service and he should be two to four years older than his wife but a greater age span is acceptable.

Although all but patrilineal parallel cousin marriages are permitted for parts of China, no cousin marriages were recorded for Sanlei Ts'un as villagers claimed they were acceptable but undesirable. This differs from Gallin's study on Taiwan's West Central plain where cousin marriages were estimated to total about four per cent (1966:153). There is absolute surname exogamy. Additionally, although not as strongly sanctioned, marriage between members of certain paired surnames are not permitted, i.e., Chien and Liao, although there was one example in the village. Outside of these restrictions, there is no patterned regularity indicating certain surnames commonly marry each other. Statistically, there is a strong tendency towards

li exogamy. Although most brides came from villages within two or three miles of Sanlei, brides brought from central Taiwan carry the most prestige.

The most highly rated form of residence after marriage is patrilocal, i.e., the bride joins her husband in his natal home. Neolocal marriage, which results when either the bride and groom establish a new residence by themselves or the bride joins her husband in a place where he is living alone, is not uncommon. Many research reports describing Taiwanese marriage which are based on official records have combined neolocal marriages with the figures for patrilocal marriages resulting in an inflated percentage for the latter (P.K.C. Liu, 1967) because the category of wife joins husband in the records applies equally to either. Some marriages, especially in the recent period, do not fit these traditional anthropological categories. Some young people are living and working in town. They marry in the village but immediately establish a new residence in town with an underlying intention to return to the village in two or three years when the wife has a baby in order to live patrilocally.

Selecting a Spouse

From the point of view of the marriage partners there are three different marriage procedures for obtaining a spouse. The original form is the "arranged marriage,"

established between the bride's parents and groom's parents through the auspices of a matchmaker, the bride and groom not meeting until the wedding. This form, once very popular, is declining in frequency, constituting about one quarter of the recent marriages in Sanlei Ts'un from data and estimated about the same for the li.

A second form is what we have called a "veto marriage." It is closely related to the strictly "arranged marriage" because the procedures are similar, initial negotiations being handled by a matchmaker between two sets of parents. However, before the engagement, the young people meet each other, frequently at the potential bride's home in the presence of both parents and the matchmaker. Alternatively, they may observe each other but not meet by both attending the same function such as a movie or amusement park in separate groups. Each potential spouse retains the right to veto the marriage but this is seldom done openly. The negative sentiment is expressed by pointing out faults, "He doesn't look strong." "She looks like she has expensive tastes." Positive sentiment, on the other hand, is merely a statement by the child to the parent that "You know best," or "Whatever you think." (See Glossary C.) This data was obtained by both interviews and observation. I accompanied one village boy, his parents, and the matchmaker to the home of the potential bride where we visited for an hour and left. In the taxi on the way back to the village, the boy told his father that he should

make the decision because he had more experience. The boy had previously rejected two other girls by politely pointing out possible faults. The boy and his father did not openly discuss the boy's role in determining the marriage, but that evening the father told me that if the young couple later had trouble the son could not blame him for making a poor choice as he had played a part in the selection of the bride. I also observed two similar visits to a village girl's home and the conversation which followed; one suitor was rejected and the other accepted. This form has always been present in Chinese culture but in the modern period has supplanted in frequency the arranged form.

The final form which we are calling a "love marriage" is increasing the most rapidly in frequency. It is simply the self-selection of mates. Often, the engagement and wedding are legitimized in traditional terms by employing a matchmaker to carry on negotiations and arrangements as if the decision had not already been made. Among the oldest generation still living in the village, there seemed to have been only one true "love marriage" that was opposed by parents. The couple registered the marriage with the Japanese police and ran off to the mountains to live and did not return until after the girl was obviously pregnant. The term, "love marriage," could also be applied to common-law marriages and many remarriages, especially among couples who marry rather late in life.

Careful collection of data is necessary in obtaining marriage rates by types for there is a tendency to disguise the latter two types as if they were the highly rated arranged form. One man in Sanlei once told me he had an "arranged marriage" and did not see his bride until the wedding. I later learned he and his wife were from the same village, they grew up in homes only 100 feet apart, and both played on the same school tag-ball team. (For discussion of marriage events, see Chapter VIII.)

Incorporation of the Bride

Marriage does not make the bride a full-fledged member of her new family for a wife attains a status in her husband's home only through her children, especially sons (C. K. Yang, 1959a:89). This value, true for much of China, has been clearly expressed by Fei:

> . . . the legal act of marriage, although preceding the birth of a child, always anticipates the realization of parenthood . . . the full status of a woman is acquired after the birth of a child. Similarly, the affinal relation remains impotent unless a child is born . . . (1939:30).

This is also true in Sanlei, a wife is not fully incorporated into her husband's chia until after she has a child. As will be discussed later, an adopted child may be substituted for a natural child. In spite of the fact that the literature suggests that barren women could be divorced (Lang, 1946:40), no one in Sanlei had ever heard of it happening.

Chao Fu (Adopted-in Husband)

In order to continue the family line and provide descendants to carry on ancestor worship, a man may bring in a wife for his son as described above. However, some families will have daughters but no sons. There is a culturally specified means for overcoming the problem, the adopted-in husband, chao fu, a culture trait which is found all over China (Gallin, 1966:155-6; Fei, 1939:71-2; Hsu, 1967:98-103). It is often called a matrilocal marriage although China is classified as a patrilocal society (Murdock, 1967:196). Its frequency is yet to be properly assessed for a few statistics are ever provided. Fei lists 12 examples for Kaihsienkung and states that this is significant but provides no percentages (1939:72). Gallin lists six such marriages for Hsin Hsing, again without percentages, but states that it is "difficult to see any tendency for or against the practice in Hsin Hsing" (1966: 188). Only in West Town does the practice appear to be frequent where one third to one half of the marriages are matrilocal (Hsu, 1967:98). However, there is a serious question as to whether or not West Town is in the mainstream of Chinese culture (Hsu, 1967:17).

The exact numbers of matrilocal marriage in Taiwan based on official records provided by Barclay for the period from 1906 to 1943 (1954:229) indicate a steady decline from a high of 21.8% in 1906 to a low of 6.2% in

1943. The decline appears to continue for the P. K. C. Liu study in 1967 for Shihlin indicates less than 5% of the households were matrilocal (1967:34). No matter what year is selected from the above as a standard, Sanlei is deviant. Of the 94 marriages previously listed, nineteen were regular matrilocal with an adopted-in husband and six more are also classified as matrilocal, an adopted-in husband for a daughter who had been previously adopted-in as a child. Twenty-five such marriages constitute 26.6% of the total studied, a percentage higher than Barclay lists above for any year in Taiwan, even 1906. Only Wolf furnishes exact figures based on full data acquired ethnographically for a village also located in the Taipei region. Among 119 married men, 26 were chao fu (1966:889) resulting in a percentage of 21.8% which is not unlike Sanlei's 26.6%.

Barclay's figures regarding this form of marriage are questionable. He reports that there were significant problems in translation for "the terms are Japanese and the facts Chinese" (1954:228). Furthermore, he points out that other compromises may be made, the marrying male may assume the wife's surname (1954:228) and this could make errors in records. As discussed by Gallin (1966:156-8) and Barclay (1954:229), because the adopted-in husband loses his dignity and authority and is often insulted, there would be strong reasons favoring an attempt to conceal the true

incidence. P. K. C. Liu also points out that the percentage listed is probably lower than the actual frequency (1967:60). An original matrilocal marriage may now be considered patrilocal because either the girl's parents are dead or the couple, after some years in the matrilocal residence, had established a new residence.

A family without a son but with a daughter, natural or adopted, can assure the continuation of the family by this procedure of matrilocal or adopted-in husband marriage. At marriage, the groom becomes part of the family of the bride. The degree of his incorporation is established through negotiation. Often, the ceremony itself is the mirror image of a regular wedding, celebrated at the bride's home rather than the groom's, arranged by a matchmaker and with the identical establishment of ch'in ch'i (affinal) relationships between the two families. The forms of "arranged," "veto," and "love" described above may be identical.

The conditions of the marriage contract may vary but there is always an agreement that the new family and some or all of its descendants will continue the worship of the ancestors in the bride's home. Although the agreement is often written, a few villagers prefer an oral agreement because a written agreement looks too much like a potential court case. Sometimes, conflict later occurs with reference to the terms of the agreement. Most often,

the agreement is written in duplicate, one copy left on the ancestor's table and the other burned in the ancestor's pot[9] to properly inform the ancestors.

The groom may or may not bring in ancestors of his own for worship, i.e., an additional ancestor's pot. The groom usually retains his own surname, but may assume his wife's surname or even combine the two to produce a joint surname. There were none of the latter two currently in Sanlei but examples of each were found in T'oulei.

The most variance in marriage contract terms is with reference to the surnames of the children. The range is from all children assuming the groom's surname (two cases) through half assuming each surname alternating in order of birth (three cases), to all assuming the bride's surname (one case). The most common pattern is for one child to assume the bride's surname and the rest the groom's (19 cases). In this arrangement, the one child is always either the first or second, usually with the bride's parents retaining a choice and not making it until immediately after the first child is born. If the first child is a boy, it will be assigned the mother's surname, but if the first child is a girl, frequently she will obtain the father's surname, with the second automatically assigned the mother's surname. In this case, the hope of the mother's parents is that the second child will be a male for a male child with the maternal grandfather's

surname is the best means for guaranteeing continuity of worship.

The process, or combination of processes described above, may be quite extensive, i.e., they may be repeated in successive generations if no male is produced. One extreme example is illustrated by the case of Liao Chi-cheng (Figure 7) who is now age 80 and the most educated man in his generation. Liao (1) had no children but adopted a daughter (2) and later adopted in a husband for

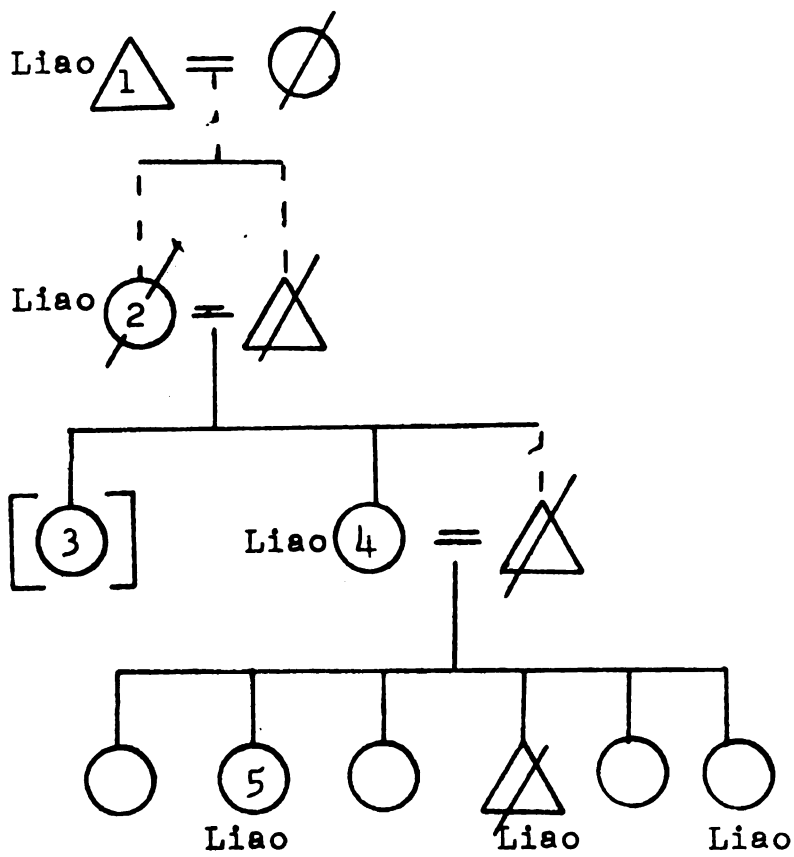

Figure 7. Kinship Diagram, Liao Chi-cheng Chia (All above individuals surnamed Liao are so noted.)

her. She (2) had two children: one (3) married out, but an adopted-in husband was brought in for the other (4). The latter (4) had six children before her husband died and half were named Liao and half Wu in accordance with the initial arrangement that alternating children would be assigned each surname. At the time of the study, the family was searching for a man to be brought in as an adopted-in husband for Liao's 18 year old great-granddaughter (5). Liao (1) hoped to have him agree that all his children would have the surname Liao, but he was willing to reduce his conditions to a minimum of his choice of one of the first two only. Thus, Liao Chi-cheng (1) has been able to maintain his family name and ancestral line for three generations although there were no natural children in one generation, only girls in another, and the only male in the third died as a child.

Men who become adopted-in husbands usually possess some social characteristic that makes them unlikely prospects for a regular marriage. That is, they may be from a poor family, be an orphan, or be the last in a family with many sons. In each of these cases, it would be difficult for the man's family to afford the expenses necessary for a regular marriage. Sometimes the man has a physical defect such as a crippled leg which lowers his value as a groom. On the other hand, it is not unusual for a quite capable and ambitious young man with otherwise poor

prospects to become an adopted-in husband for he does gain a wife, usually without cost, and also gains a home and an economic stake in his wife's property, the extent determined by negotiation.

At marriage, adopted-in husbands are older than regular husbands, 27.1 versus 25.8, but their brides are younger, 19.8 versus 21.2. Although I was not able to establish the explanation with certainty, it does appear that the older age for men is related to their inferior prospects as grooms. The younger age for women seems due to two facts. For one, they are probably acceding to parental wishes for fear of the lack of descendants; for the other, there is the absence of any pressure to delay marriage because of the girl's economic or labor contributions since she will not be leaving the household.

Most men state they would not like to be an adopted-in husband, a chao fu. However, the status of an adopted-in husband does not appear to be as low in Sanlei as has been described in some other communities (Gallin, 1966: 156; Barclay, 1954:229). For example, one adopted-in husband is the elected representative to the farmers' association, another is the chairman of the mediation team for a nearby coal mine, and yet another was the pot master for the last Matsu festival. Perhaps the differences in status are related to the frequency of matrilocal marriages in various communities. Only West Town among the Chinese

ath
ban
not
it
a f

ta
ab
ra
in
st
fr
on
Sa
ma
an
l
t
f
p

d
s
i
w
c

ethnographies has a higher percentage of adopted-in husbands than Sanlei and Hsu states that such a husband does not have low status (1967:98). Sanlei villagers indicate it is a natural process to adopt husbands, what else can a family without a son do?

The frequency of this form of marriage has important implications for the role of women. There are probably regional variations across China with respect to rates but, as stated, rarely are competent data provided in ethnographic studies to support the summaries and abstractions. Because of the low status usually claimed for chao fu marriage, it is likely the estimates by villagers on which the summary may be based would be low. Among 15 Sanlei men, the average guess at the incidence of chao fu marriage was 1 in 10 with a single high guess of 1 in 7 by an old man. Since the actual incidence was higher than 1 in 4, this inaccuracy is significant. If this dissertation was based on interviews and the impressions of informants rather than on actual counting, a quite different picture would likely have emerged.

Many, if not all accounts of the Chinese family discuss the great period of stress for the new bride when she enters her husband's home as a virtual stranger as one important factor contributing to her lowly condition. Conversely, few reports discuss the role of men in the case of the chao fu marriage who enter the bride's home as a

virtual stranger. A. P. Wolf is a notable exception (1968). He reports that chao fu husbands are often pampered in their new homes, a behavior pattern also common in Sanlei because of the fear the man will leave. For Sanlei, in 1 of 4 marriages, it is the male who must adjust to the female's household with her father usually the effective head.

Siaosiv (Adopted Daughter Marriage)

Of the 94 marriages under consideration, twelve (12.8%) were the type discussed by Fei (1939:53) as the siaosiv marriage and elaborated by Lang (1946:127) and Gallin (1966:163-6). In brief, for Sanlei, the parents of a boy adopt a female baby three to ten years (average seven) after the birth of a boy and raise them as brother and sister. With about six months notice, when the girl is 18 or 19, the couple are married. There are rarely parties or any significant wedding ceremony as merely "putting the shoes under the bed," or "pushing them together." (see Glossary C). The first phrase is also associated with common-law marriages and the remarriage of widows or divorcees. These marriage types all share in common a relatively low status in the village value system.

Under normal circumstances, a wedding is a gay occasion with a big dinner, many guests, etc. The affair lasts most of a full day with the newly-weds as the center

of attention. Important guests toast them and speeches are made about them and their families. In the whole life cycle, the funeral of an old person is the only rite de passage approaching it in importance. If a person does not have a wedding party, it is likely he will never be the center of attention at any major affair. Since he also goes to his friend's weddings, he wants his family to reciprocate as a host. The wedding also marks his status change from immaturity to full adult, since an unmarried man of 30 cannot hold traditional positions available to a married man of 24. The wedding party marks this status change for everyone in the area to see and without a big ceremony the status change is not clearly communicated.

This kind of marriage, the siaosiv, is often discussed in Chinese ethnographies but, once more, rarely are statistical data provided. Gallin points out that the practice is relatively important in Hsin Hsing but declining in frequency (1966:155) as is also true in Sanlei. Adoption of daughters remains very common in Sanlei (see subsequent section), but marriages of the siaosiv type are relatively rare given the number of possibilities, i.e., families with an adopted daughter and natural son of appropriate ages. Of the 119 marriages previously listed for another Hokkien village, 23 were siaosiv (19.3%), even higher than the 12.8% listed for Sanlei (A. P. Wolf, 1966: 889).

At the time of the adoption and while the child is being raised, there are few differences to be distinguished between girls who were adopted as future mates and girls who were merely adopted as daughters. For his Hokkien village in northern Taiwan, Wolf argues that there is a difference in the daughters who were adopted as future mates and those as mere daughters (1966:884) because he classifies the adoption of a daughter as a future mate as part of the marriage procedure. He claims it differs from the regular marriage only in the longer length of time between change of residence and consumation. Yet, his data do not fully support this position. If the boy dies, the girl is not a widow (1966:884) and furthermore, she becomes eligible as a marriage partner for men such as her intended's brother or his patrilateral parallel first cousin with whom relations would have been incestuous if she has actually been married as planned. Similarly, it will be pointed out later that a siaosiv daughter may be married to a younger brother if the eldest son is able to convince his parents he should have a regular marriage.

It appears for Sanlei that the actual decision regarding marriage is not made until the couple is approximately the appropriate age for marriage. Even then, the decision is dependent upon the financial well-being of the family and the ability of the boy to resist his parents which he usually tries to do. In all twelve examples

cited above the male was informed first and in only one case, did the boy claim he did not try to indicate strong reluctance. This latter individual remains today a most filial son, age 42, living in an extended family with his father having full control of all family income and expenditures. Eleven of the twelve cases then may be considered on one level to indicate a failure by the boy or girl to obtain their wishes. Sometimes, the reluctance was expressed mildly but in other cases, there was a loud argument, lasting days, which was heard all over the village. In one of the twelve marriages, the bride was adopted to marry the eldest son in the family. She later was married to the second son after the eldest son successfully persuaded his father not to force the marriage. The second son also tried to refuse but his father was adamant.

Wolf (1966:883-92) found that the siaosiv marriage had a much lower probability of success than normal types which he relates to the nature of the causes for the "incest tabu." Data for Sanlei tend to support his argument. Only two of the twelve marriages would be rated as above average successes in the village. In both cases (one is the filial son example cited previously), each partner is quiet and unaggressive and was so as a child. All four spouses were virgins at marriage and neither man had been to the tea or wine houses. Although there was some ritual avoidance after the engagement was announced, in both

cases the men were sexually curious but engaged in only a minimum of petting with his future spouse such as squeezing her breast before the marriage. My own opinion, based on a general impression is that both men even today are rather naive in orientation toward the world.

As stated previously, in some cases the reluctance and dismay was expressed openly by the son and foster daughter both and considerable argument ensued although the couple eventually married. Although not fully revealed by the data for the 94 marriages, some couples were successful in their arguments with parents and managed to change the plans for a siaosiv marriage. This is a delicate area in which to collect data for it necessarily exposes someone as an unfilial person. Since the son is usually informed first, if the proposed marriage is immediately cancelled it is possible that only the father, mother, and son would ever know that the possibility had been advanced. Thus, an informant revealing this information would be required to state that his son had been unfilial. Yet, I did find four such examples among current living Sanlei men and women.

The incidence of the adopted girl marrying out does not necessarily reveal refusal. The original purpose for the adopted daughter marriage was to save wedding costs and if the family financial status had improved, a regular bride may be brought in and the foster daughter married out

in the usual manner. From the official records, it is impossible to tell if the decision to marry out the girl was made by the father alone because his family could now afford the regular marriage with its consequent prestige accrual for the family or was due to the non-acceptance of the original match by the boy and/or girl. In Wolf's report, of 19 men born between 1910 and 1930 who later had an adopted sister designated as a future mate, only two eventually married, and in 15 cases, the young couple refused to go through with the match (1966:886). Only two of nineteen does not offer strong support for his contention that the adoption is a "partial" marriage. Indeed, other kinds of data suggest it is less a "partial marriage" than is an engagement. If an engaged girl refused to complete the wedding, her family would owe damages to the groom's family. On the other hand, if an adopted daughter refused to complete the wedding, her natal family (with whom relations are most often maintained) would not owe damages.

Unlike the men in Wolf's study (1966:883-92), village men of Sanlei rarely travel to the wine and tea houses in Hsin Tien or Taipei. They do go occasionally to an unlicensed drinking and eating location in a basement in a nearby village house to eat snacks and drink wine or beer and sing or play games, but no prostitutes are ever present.

However, four promiscuous women do reside in Sanlei and villagers consider one insatiable. Of these four women, two were formerly siaosiv. This frequency is highly significant by sign although the "n" is too small for adequate testing. Among siaosiv, there is a high proportion of quite unhappy marriages and one childless marriage, the only childless marriage of ten years or more in which the wife was under 25 at marriage and in which the couple still refuses to adopt a child.

Everyone in the village argues why a siaosiv marriage is a good idea for someone else. Their reasons emphasize both the economies to be realized and the positiveness of good relations between mother and daughter-in-law which must have been present if the match had been proposed. The reasons given for not personally desiring this kind of marriage was always either, "I would be too embarrassed," or, "It would not be interesting" (see Glossary C). It is significant that no man or woman in the village would prefer a siaosiv marriage.

The last siaosiv marriage in Sanlei Ts'un was in 1959 and since that date, three girls who had been adopted into the village as future mates married out in the regular fashion. As far as I could tell, only one of these was after an argument (a "love marriage" to a boy from T'oulei) while the adopted fathers of the other two claimed that they married the girls out because siaosiv marriage now

would only result in trouble for "young people make more decisions today" (see Glossary C). The frequency of siaosiv marriage is inversely related to prosperity and directly related to the lessening power of older generations over younger generations.

Implications of Marriage Forms

The variety of marriage residences are particularly significant for the status of women. The major stress for the bride in her new home largely originates from the groom's mother according to the traditional literature (see Chapter X). Combining the 12.8% siaosiv marriages in which the bride was raised in the groom's home with the 25.6% of the brides who married chao fu and thus did not move to the groom's home at marriage and then adding in the "neolocal" forms suggests that close to half of all brides in Sanlei do not have the kind of "mother-in-law" problem in their homes so characteristic of the Chinese literature.

Reasons for Adopting Daughters

There are a number of different reasons for the adoption of a daughter. Gallin lists, in addition to a future mate for a son as discussed above, such reasons as no children in the family, to replace a dead infant, to invite a natural baby boy (chao ti), and as a servant (1966:161-3). These reasons are also common in Sanlei except that the last is very rare and, of course, always

represents a loss of a village girl for no one in Sanlei has a servant.

In order to eventually allow for a siaosiv marriage, a family frequently gives up a natural daughter in adoption and immediately brings in an adopted girl, i.e., if a woman with a son age five or so has a baby daughter, she can give her out for adoption and replace her with an adopted daughter. The expenses of raising children is equal whether natural or adopted. However, when the children are mature, with adoption and a siaosiv marriage, there is only one marriage to arrange instead of two and the larger expenses of the groom's parents for a regular marriage are avoided.

There is a greater stigma attached to giving up a girl in adoption to a family which has no son as a potential future mate than to one with a son. If the family has a son, people claim it might be something like an arranged marriage, but if there is no son, it can only be considered the same as selling the girl. Most girls from proper Sanlei families who are adopted out go to families with sons of appropriate ages (discussed in a later section).

Other reasons for adopting daughters are suggested. Because a woman gains status in her husband's home through her children and since an adopted daughter is legally and morally the equivalent of a natural daughter, a fast means of incorporation is provided. A new wife can significantly

improve her position in an extended household soon after marriage by adopting a daughter rather than waiting for a child to be born. This reason for adoption is not frequent but does demonstrate a significant factor with regard to the role of women. There was only one case in Sanlei, one in Erhlei, and two in T'oulei but several people discussed it specifically and generally. It tends to occur only when the woman has a "strong personality," has earned money working outside the village before marriage, and is married at an age two to five years beyond the median age. These conditions suggest that the practice may be an attempt to minimize the status loss for such a woman upon marriage.

A second additional reason for the adoption of daughters is related to the mechanism of the adopted-in husband marriage discussed in an earlier section. A family without children would be incapable of meeting the injunction that there be descendants to carry on worship of ancestors. Because of the high death rate, a family with only one or two children is also in a precarious position. According to Hsu and true for Sanlei as well as most of China:

> The desire for male descendants is intense. In local usage this is to insure the continuation of smoke from the incense at ancestral shrines. To perpetuate this smoke insures the continuation (1967:75).

It is possible to adopt a daughter, raise her, and at the appropriate age, bring in an adopted husband to aid in carrying on the family line. Of the 94 marriages previously listed, 6 were of this type, an adopted daughter who later had an adopted husband. (The discussion related to Figure 7 demonstrates this process in one generation.) In this kind of adoption plus marriage, although there is no "biological" continuation of a family line, there is a "sociological" continuation.

The third and final additional reason seems to be based on friendship or interpersonal relations. It is possible that a ch'in ch'i (affinal) relationship may be established or an old one strengthened by means of adoption of a daughter. There were three adopted daughters in Sanlei that established new ch'in ch'i relationships between neighbors who had been good friends. In another case, an adopted daughter affirmed a relationship by a kind of exchange, a repayment of a daughter adopted in a previous generation although the first adoption was never construed as a debt. In all four cases, there was a movement of a daughter whose birth order in her natal family was fourth to sixth to a family which had less than two natural daughters.

Distribution of Adopted Daughter Types

There were eight unmarried girls living in Sanlei who were adopted daughters, twelve who had been adopted and

married as siaosiv, and six who had been adopted and later married to adopted-in husbands. Finally, there were five wives who had once been adopted daughters but married out. In total, 31 females who were living in Sanlei at one time had been adopted daughters (see Table 9). Since there were 194 females at the time of the census, 16% had once been adopted. This may appear to be high, but the frequency appears to be decreasing and is probably related to the decline in siaosiv marriage and improved economic conditions. In a 1934-5 rural survey near Taipei, it was discovered that 25% of the females were once adopted (Okada, 1937), a percentage much higher than current Taiwan rates.

Table 9. Adopted Daughter Types in Sanlei Ts'un

Type	Number	Per Cent
Adopted, Unmarried	8	4.1
Adopted, Married as Siaosiv	12	6.2
Adopted, Married with Chao Fu	6	3.1
Adopted, Married Out	5	2.6
Total Adopted	31	16.0
Never Adopted	163	84.0
Village Female Total	194	100.0

The data regarding girls who were adopted out of Sanlei Ts'un is not as complete as will be explained by the details of where and how adopted girls originate. Nevertheless, among the families currently living in Sanlei, there were 15 girls who had been adopted out. There

is some overlap with the previous figures because an adoption between families who both live in the village counts twice, once as an "in" and once as an "out." The general opinion of the villagers is that the number of adoptions in and out of the village has been approximately equal.

One of the items of the household registration is the birth order of the child, distinct for each sex. Birth orders are listed in Table 10 for the 31 adopted-in females. Residents argue that daughters are usually given in adoption because a family has too many already, but the data is only partially supportive of this belief. A high number of adopted children whose birth order is first or second indicates other processes are significant although nearly sixty per cent of the adoptions are from families which already have three or more girls. Since girls do not have a value as high as boys, it is quite probable that younger girls will be released by families that have several daughters. In some cases, it appears that economic deprivation necessitates the release of girls although there was only one family currently living in Sanlei who supposedly gave away girls for this reason.

Divorce or widowhood among people who are not incorporated in larger chia also results in releasing children who may have a birth order number which is first or second. The exchange of natural daughters for adopted daughters to promote later siaosiv marriages explains some

Table 10. Birth Order of Adopted-in Female Residents

Birth Order	Number
1	8
2	5
3	3
4	6
5	4
6	3
7	2
Total	31

of the other first or second daughter adoptions. Finally, illegitimate children and children from common-law marriages are sometimes released. In many of these latter cases, there would be no one in Sanlei to interview as required by the conditions for including the examples.

The age at adoption ranges from immediately after birth to as much as eight or nine years. Most frequently, they tend to be about age two or soon after weaning, while the very young babies usually replace a nursing child who has died or are exchanged between two families who both plan siaosiv marriages. The adopted girls tend to originate from the local area immediately surrounding Sanlei although two came from Taipei and one from Hualien.

Incorporation ceremonies for adopted children are minimal and are typically arranged by a matchmaker. Among friends or ch'n ch'i (affinal relatives), there is no payment of "milk money," an equivalent of the bride price at marriage. "Milk money" for female babies averages $100.00,

paid to the natal family but it is said that the older the girl and the more attractive her appearance, the greater the amount required as an adoption fee. However, no villager knows of a Sanlei girl who was merely sold but, as discussed above, given the characteristics of some people who release girls, i.e., parents of an illegitimate child, this does not mean it has not occurred. Villagers did know of two girls in another village a mile distant who were sold to become prostitutes. Three Sanlei village girls have become prostitutes in Taipei but they departed for their own reasons after reaching maturity. Once again, impressions indicate that the frequency of adoptions currently is slightly less than it was in the past.

The traditional literature suggests that the treatment of adopted daughters in a household was often extremely harsh, while adopted sons were treated well (Latourette, 1959:679-80; Burkhardt, 1953, 174-6; Smith, 1899:237-311). For the most part, girls adopted into Sanlei were about as well treated as natural daughters. There was strong sentiment also that girls given out in adoption should go to a good home, particularly one that had the potential for a later siaosiv marriage because it was said that if the girl was an intended future bride, she would be raised under conditions to promote good relations in the family. A Sanlei family which merely sold a girl would be strongly censured.

Adopted Sons

In addition to birth, boys may also be incorporated into a family through adoption. Adoption of males usually occurs when they are very young and tends to be full and complete. The adoption of baby boys is much less frequent than that of girls. At the time of the census there were only seven males (3.2%) living in Sanlei who had ever been adopted, a significant contrast with the 16% adopted females. There are two major types of boy adoptions.

The type which is considered a mere sale comprised five of the seven male adoptions in Sanlei. As described by Gallin for Hsin Hsing (1966:166-8), no permanent relations are established or maintained between the two families in the transaction and there are strenuous efforts to keep any information about an adopted boy's natal family secret. In contrast, the marriage ceremony of an adopted girl frequently involved three families: the groom's, the girl's natal and the girl's adoptive. It is not uncommon in the case of an adopted daughter's wedding for the bride to return to her natal home for a day or two before the wedding. Also, the usual visit by bride and groom three days after their marriage is consumated to worship the wife's ancestors is often to both of the girl's homes, natal and adopted. In the case of the marriage of an adopted boy who was merely sold, however, the boy's natal family is seldom involved. Villagers believe that

if the boy learns about his natal home he will have a strong desire to return to it permanently.

The second type is not quite a complete adoption socially although legally it is a standard adoption. Two of the seven Sanlei adoptions were of this form, an adoption between two closely-related family units which are usually composed of patrilineal kinsmen. A son might be given by one man who had several sons in adoption to his brother who had none. Since the household containing the two brothers may not have divided, this adoption may not involve a physical movement of the boy and in any case, the two families will usually remain intimate. In one of the Sanlei adoptions, two brothers were involved.

The other was deviant and involved matrilineal stepbrothers in an undivided household (illustrated in Figure 8). After Huang (1) died, leaving one son (5) his wife (2) remarried a Liao (3) and they had one son, a Liao (4). They all constituted a single economic family. Huang (5) married and had five children, all with the surname of Huang. Liao (4) married and had a daughter but his wife (7) ran away with a Mainland soldier, taking the child (8). The balance of the people on the diagram are now living as a single economic unit and worshipping two sets of ancestors, Liao and Huang, but these arrangements would not leave anyone to properly continue worship of the Liao line, i.e., there are no longer any Liao in the

youngest generation. Huang (5) gave up his second son (6) to Liao (4) in adoption, and his surname (6) was changed from Huang to Liao. Since the household continues as a single chia, the adoption may appear to be a trivial structural modification but this is not true for the adopted son (6) will be different from his siblings in worship and inheritance. He (6) is now attending a junior high school as the only person in the family who has ever gone beyond elementary school, the extra cost borne by his adopted father (4).

Adopted boys originate in a manner distinctively different from the manner described for girls. On the one hand, boys are seldom given up as a surplus. They tend to be first or second in birth order and often are merely

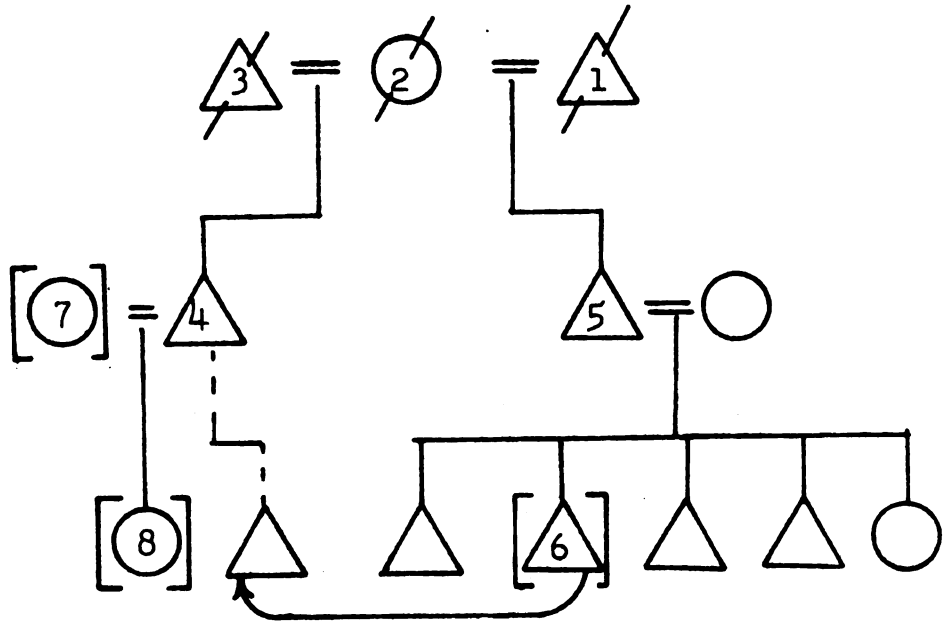

Figure 8. Kinship Diagram, Huang Wen-sheng Chia

sold, probably because they are illegitimate and rather than a matchmaker, there is a broker. The going price in Hsin Tien in 1966, although the supply was most limited, was $3,000.00 for a baby boy. Since a girl could be purchased in the same way for less than $300.00, the price is indicative of their respective value ratings. The only adopted boys who had a high birth order were usually adopted between patrilineally related kinsmen.

Family Division and Inheritance

The above described processes are used along with birth to build families. Conversely, the breakdown of a family is also a significant step, usually accomplished by family division, a legal event requiring registration in the public office. Family division can be smooth and harmonious but is usually a period of tension for disputes over the division of property are common. It is usual to employ a distant relative, often a respected *ch'in ch'i* (affinal relative), to negotiate and mediate the division. Some people gain reputations as being very skillful in mediating family divisions.

According to the law (C. K. Yang, 1959b:92), there should be no differences in shares according to sex but in practice, girls rarely get a share equal to boys. It appears that it is considered to be the family's responsibility to see a daughter properly married and living with her husband. If she is an old maid, a widow, or a

divorcee who has returned home, she may receive a share about equal to her brothers but since marriage and remarriage is common, the occurrence of these conditions is infrequent. If family division occurs with yet unmarried daughters in the household, part of the process will be an assumption of the obligation to see that each has a good match. The implications of the equal inheritance law is such that if there were two boys and a girl in a family, each should receive one third of the estate (assuming both parents are dead). In Sanlei, each boy would get one half if the girl was married. If she was not married, one brother, most likely the eldest, would get a larger share, the extra amount sufficient to provide a dowry for his sister. Only if the girl were married with an adopted-in husband (chao fu) or if her eventual marriage prospects were nearly nil would she obtain a one-third share. Girls appear to sign papers when it is occasionally necessary to give up their rights without pressure, but often it is merely understood that the daughter has few, if any, rights. No female has yet contested a division in the courts.

The immediately preceding action of females does not appear consistent with what I have argued about the status of women. That is, women seem to be extremely inferior to men with respect to inheritance although I claim women approach equality with men but I believe the appearance is

deceiving. To support my position, note that nearly 100% of the females in Sanlei eventually marry. Widows and divorcees in an age bracket when family division is likely to occur, i.e., when their father is around age 60, also have nearly 100% success in obtaining second husbands. There is agreement in the village that a man is responsible for supporting his female dependents although they too may make economic contributions through their own efforts. An unmarried female is the responsibility of her natal family (adopting family if adopted) while a married female is the responsibility of her husband's family. This responsibility continues even after her husband dies. That is, if a family containing a widow and her children plus her husband's brother were to divide, the widow and her brother-in-law would share equally if her remarriage prospects were low. However, without children, as previously stated, she is not fully incorporated in her husband's family and would not share, but a childless widow is still a prime marriage prospect. In Sanlei, a widow is usually helped to remarry by obtaining a dowry from her first husband's family. If she has children, she is usually expected to have an adopted-in husband. If she has many children, her first husband's family may offer a second prospective groom one of the children in adoption (changing his surname) as an inducement to become a chao fu. There was one such case in Sanlei and two in Szulei. A daughter with a chao fu

husband will get a full share of her parent's estate although her husband may receive a portion of her share as specified in the original marriage contract.

In summary, the traditional system did provide for a woman by assigning some man responsibility for her economic welfare. The new system of inheritance which makes women equal to men in economic terms is also designed to provide for women but in a different manner. The old system works and no woman has yet decided to attempt to introduce the new system into the village because the immediate personal gain might not offset the potential long-term security for women currently provided by the community.

In general, division of a family involves the male patriline. Family division can best be viewed as anticipated inheritance. All a man's sons have rights to his property even while he is still in active control. For example, sale of a piece of property may be of questionable validity without the approval of a man's sons. In Sanlei, if there is only one son (producing a stem family) family division will probably never occur. If there are two or more sons, division is most likely when the youngest son marries and has a child, but if the father dies before the last son is married, division is likely to occur soon after the funeral. Most divisions occur before the death of the last parent.

Inheritance, real or anticipated in the case of division before the death of parents, is equal for all sons (with exceptions to be discussed later). Diagrammed in Figure 9 is a patrilineal descent group which we will assume represents a single chia with division about to occur. Conceivably, division could produce various combinations of new chia but in Sanlei, the actual division will nearly always produce three new units: (2,5), (3,6), and (4), each unit receiving an equal share. Variations reflect the condition of (1) or (4). (1) may be attached to one of the three units; (1) may constitute a separate unit with an equal or partial share to be later split again after his death; or (1) may be a separate unit with no share but supported by the other three on a rotating basis. If (4) is unmarried, he may be attached, with his share, to one of the first two groups with a strong tendency for the parents to remain with the youngest son (4).

Almost always, a division focuses on one generational level only. That is, (5) or (6) never break off into distinct units at the time (2), (3) and (4) are dividing. It is possible that (2) and (5) could break off as a single unit and leave the rest of the original family as a whole, but this never takes place. If (2) insists on breaking off, the whole family will divide into the three units posited above although if only (2) is insistent, there may be above average amounts of bitterness generated.

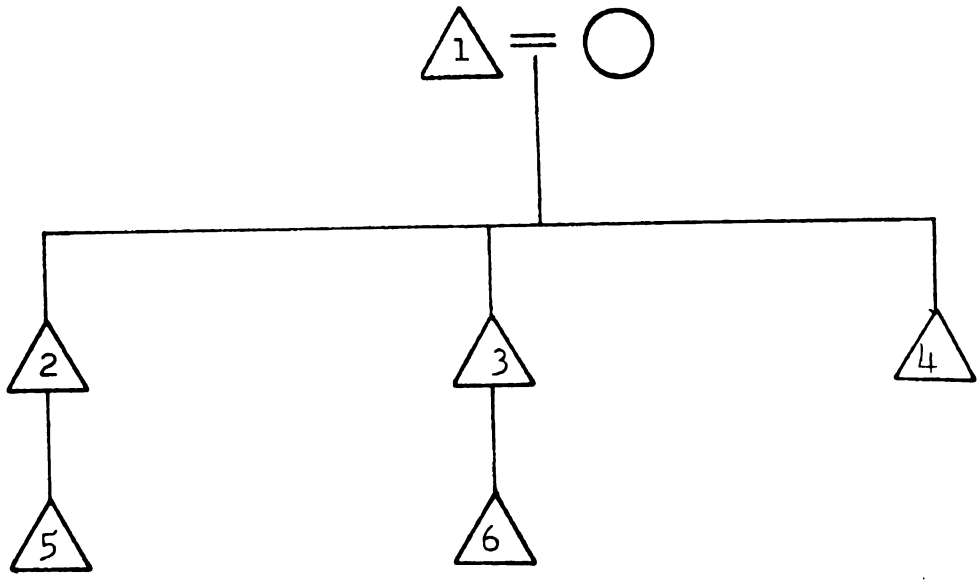

Figure 9. Kinship Diagram, Patrilineal Descent Group

At the beginning of this discussion related to Figure 9, exceptions to equal inheritance were mentioned. In addition to the variation just described for the senior generation, there is one for the junior generation. In the junior generation, only (5), the oldest son's oldest son, receives a share but it is not the equal of the others. It is often quite minor, varying for individual cases, but everyone in the village agrees that this individual should have something in spite of the fact his siblings and cousins receive nothing. This boy also has special ritual requirements for his grandfather's funeral, i.e., he wears the mourning clothes of a son instead of the mourning clothes of a grandson.

Inheritance would be about the same as the above description for division. Assuming the old man (1) dies,

the Sanlei family will inevitably divide into the three units described above, i.e., (2,5), (3,6), and (4).

The major original defining characteristic of the household (hu) was those who cook and eat together. Family division frequently appears to revolve around this function. It would appear that if a household divided in half, the two new units could cook and eat separately but continue to share a single stove, but this never occurs. A new stove must be constructed; hopefully, the stove will be in a separate room but if space is not available, a second stove will be built in the original kitchen. Each new household will then share the kitchen but use their own stove. A popular method of referring to family division is to call it "the separation of the stove" (see Glossary C). To refer back to the previous discussion, in a divided family with the old folks alive, they will never have a separate stove. They either eat in turn with each new unit or eat regularly with one unit while the others contribute food.

Basis for a Diachronic Approach to the Family

The foregoing has provided both a static view of the distribution of family types in the village and an explanation of various mechanisms which affect its membership and existence: birth, marriage, adoption, and division. I now propose a dynamic view of the family life cycle designed to reveal the major patterns in the village. In other

words, rather than a series of snapshots, there is an attempt to provide a moving picture. This mode of analysis draws heavily on the concepts presented by Buchler and Selby (1968:52-58) which combine both jural rules and statistics. Built into the analysis are the constraints of demographic factors, specifically birth rates, death rates, and age at marriage.

Although the number of stages in the life cycles of families identified in various societies differ considerably,[10] Fortes (1962:2-5) has suggested that the developmental cycle in the domestic group may follow the general paradigm listed below:

1. Phase of Expansion: Offspring are economically, effectively, and jurally dependent on their parents.

2. Phase of Dispersion or Fission: Marriage of the first child until marriage of the last.

3. Phase of Replacement: Until death of both parents.

This general paradigm will be followed for Sanlei village without any attempts at further proliferation of stages.

Postulates Affecting the Family Life Cycle

Additionally, I have derived the following set of what might be called a combination of rules, beliefs, and cultural values bearing on the family which must be taken into consideration in the analysis of family life cycle patterns in Sanlei village. There is no attempt to be

complete, let alone exhaustive, as my selective criteria were merely based on those items that seemed immediately necessary for the analysis. A label under which they can all be subsumed is not at my command, but they are similar to what have been labeled postulates (Hsu, 1969; Hoebel, 1960). The truth of these items would be generally accepted by most villagers. (The exceptions are illustrated later.) The items will hereafter be identifed only by a number in parentheses.

(1) It is necessary that a family obtain descendants to carry on worship of the ancestors. Worship of ancestors should be specific for approximately five generations above the oldest living member but may be general beyond that.

(2) Worship of an ancestor is best performed by a male with the same surname.

(3) Descent is patrilineal and surnames are obtained from a child's father.

(4) Males may assign their rights to give children their surnames to others.

(5) An adopted child is almost the equivalent of a natural child.

(6) The large extended family, ta chia ting, is best economically, morally, and ritually.

(7) Relations should be harmonious within a household.

(8) The larger the group the more likely there will be disharmony.

(9) The individual is subordinate to the family of which he is a part.

(10) Nevertheless, each person is an individual with his own personal qualities and idiosyncracies and rules for behavior must be flexible so he can meet them.

(11) Respect and obedience are due from younger generations to older generations.

(12) Respect and obedience are due from younger people to older people but in lesser amounts than that due between generations.

(13) Respect and obedience are due from females to males.

(14) People who are related consanguineally can maintain more harmonious relations than people who are not related.

(15) People who are related affinally can maintain more harmonious relations than people who are not related at all.

(16) Females naturally have more quarrels with other females than do males with males.

(17) It is the responsibility of an individual's descendants to care for him in his old age and having descendants is the only protection for old age.

(18) Both a child and a person beyond age sixty are something less than a mature and responsible adult and not capable of properly representing the family or making the best decisions.

A preliminary analysis quickly reveals that some of these items are in direct conflict with others and that operationally, some principles may be in conflict with others. Moreover, the ranking of the items is not fixed or clear. For example, there is no conflict generated in terms of (11), (12), and (13) when a grandfather interacts with his granddaughter. However, there is conflict for the same items in the case of a woman and her son-in-law, i.e., (11) and (12) declare her superordinate and (13) subordinate. This latter example may indicate why there are more conflicts in a household containing an adopted-in husband.

As indicated in Figure 10, in the case of the regular marriage, the relationships between the senior generation and the incoming spouse are consistent or neutral in assignment of subordination in terms of (11), (12), and (13). Conversely, for the adopted-in husband household, there is a conflict in the same rules as previously specified, with reference to the relationship between mother-in-law and son-in-law. This latter case could also occur between mother and son in the regular household but several years of living together when the son was extremely dependent would probably have produced an adjustment.

Another item, (18), produces another kind of disagreement. There is a belief for example that a man older than sixty should withdraw from active control of his family and turn management over to his son who is now capable of better decisions (18). In the same conversation, villagers will claim that vigorous men over 60 are the best office holders and mediators for they have the experience to make the wisest decisions.

Family Life Cycles

The above postulates are combined with the analytical techniques explained in the previous section to illustrate the family cycle in Sanlei Ts'un. For simplification, assume the starting unit is a young married couple living alone in a single village household. Although this

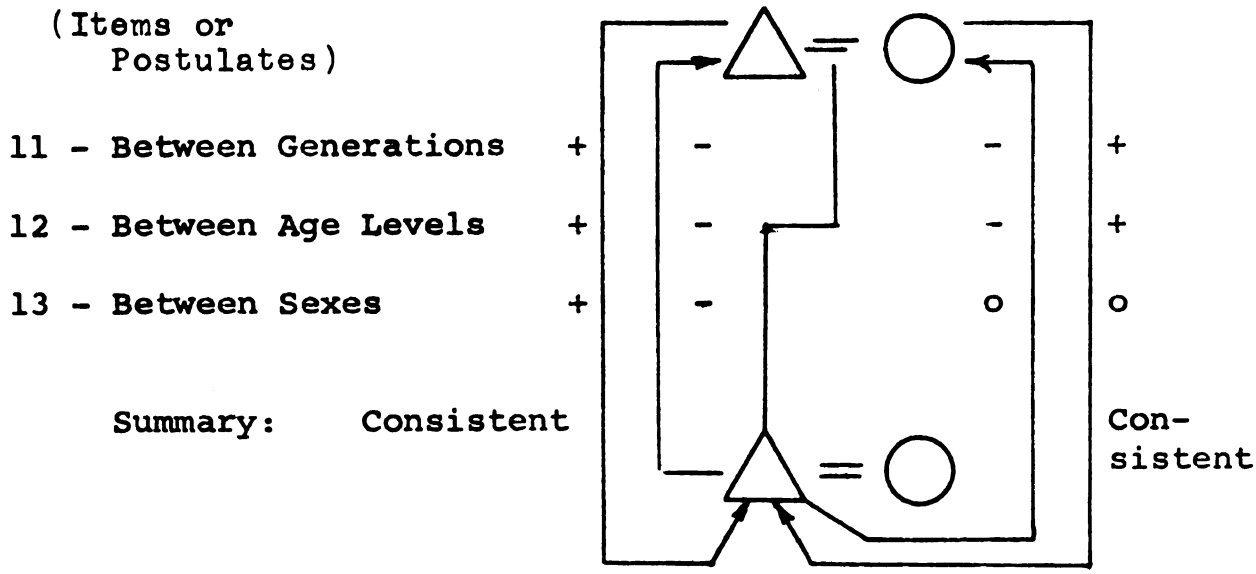

REGULAR MARRIAGE

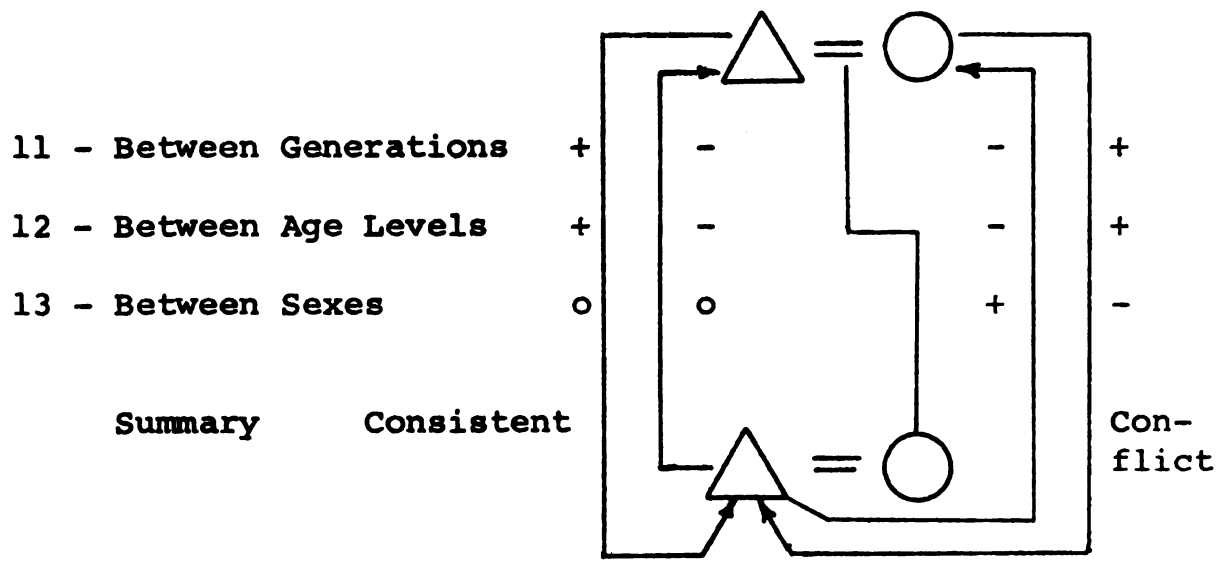

ADOPTED-IN HUSBAND MARRIAGE

Note: Arrowed lines indicate a social relationship which may be characterized by superordination (+), subordination (-), or be neutral (o) with respect to the three items listed on page 287 and summarized briefly above. Only in the adopted-in husband household do these three rules create conflict.

Figure 10. Relations Between Parents and Child's Spouse by Sex

si
fo
li
Pa
ri
ho
li

Th
ab
si
(4
is
an
gi
ri

situation is relatively rare, it is useful analytically for a starting point and once completely described, the life cycle can be viewed as an endless chain. Phase I, the Phase of Expansion continues until the first child is married. The first several years in the existence of the household may produce a variety of forms such as those listed below:

A. The couple would meet the typical ideal minimal goal maintained by most villagers and have three boys and two girls and raise all to maturity, complying with all the above items.

B. The couple would have only one boy but perhaps one or more girls and raise the boy to maturity, also complying with all the above items except perhaps (6).

C. The couple would have no boys but one or more girls who live to maturity potentially violating (6) and (17) and surely violating (1) and (2).

D. The couple would have no children, violating (1), (2), (6), and (17).

E. The couple would be divorced or either mate would die, in either case without offspring, violating the same items as in Case D.

There are culturally provided solutions for each of the above potential violations. For case B and C, it is possible to adopt a boy (5) and/or have adopted-in husbands (4) and (5) for one or more of the girls. For case D, it is possible to adopt a boy (5) or one or more girls (5) and have adopted-in husbands (4) and (5) for the adopted girls. In the case of E, without offspring, either remarriage is possible or the solutions advanced for D. Note

th
hi

du
un
(6
ri
wi
br
ma
fe
a
er
th
co
ti
hi
The
wou
rat
eac
fam
ily
prol

into

that in Phase I, the Phase of Expansion, all the families listed above would be nuclear.

Phase II, the Phase of Dispersion or Fission, occurs during the period from the marriage of the first child until the marriage of the last. In accordance with (1), (6), and (17), it would be best if children, as they married brought in their spouses to live in the parents home with (2) and (3) requiring that male offspring especially bring in their spouses. Consequently, if there are no males in the family, it is necessary that no less than one female bring in a husband and in this case, that there be a possibility of producing a child in the succeeding generation with the original surname. In accordance with the requirements of (2) and (3) and because of (4), this condition can be met and often is met by the local practice of an adopted-in husband who permits one or more of his children to be assigned his wife's original surname. The A case above, which does not violate most postulates, would have seldom been realized in Sanlei due to death rates. Demonstrated in Figure 11 are various ways in which each of the five types (A, B, C, D, E) may become a stem family. Of course it is also possible that any stem family could become a regular extended family which is highly probable for A in particular.

However, an extended family is unlikely to come into existence because of demographic factors, i.e., two

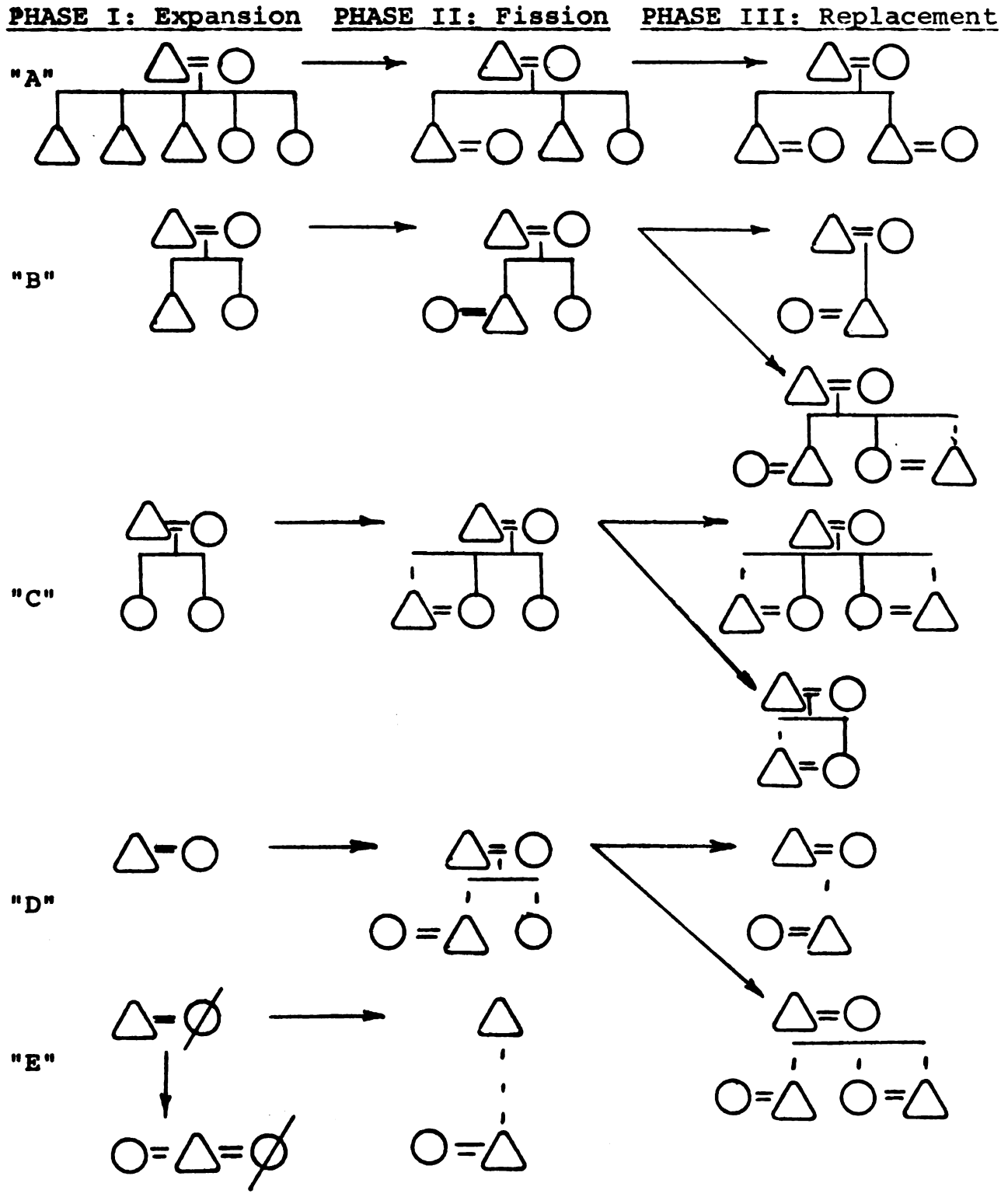

Note: This is a sample only and favors development of more complex forms. Any unit may divide or die off before achievement of column 3 and thereby revert back to column 1.

Figure 11. Sample of Family Life Cycle Stages in Sanlei

males must marry while at least one parent remains alive. As indicated, other processes could create extended families, but these too are unlikely. Adopting boys is extremely expensive and although adopted-in husbands may be acquired for natural or adopted daughters, it would take a reasonably wealthy household to attract two men.

Nevertheless, an extended family is realized with some degree of regularity, but seldom is an extended family maintained for other factors are relevant. For example, there is the recognition of man's individuality (10) but he is supposedly subordinate to the family (9), a potential and frequent conflict. In the larger family, it is difficult to maintain the harmony that is expected (7) because of the belief that the large group naturally has more problems (8); there are more females who naturally fight with each other (16); and finally, many members are only affines, a stronger source of conflict than consanguines (14) and (15). It may very well be the case that these three causes are part of a self-fulfilling prophesy, i.e., it is believed there should be problems, so there are.

Yet, while the senior generation male is active and in control, a continued undivided existence is possible. However, as he approaches and passes age 60, he ceases to be regarded as an effective adult, often withdrawing willingly from the responsibility (18). This withdrawal is

usually delayed as long as there is one unmarried child in the household, particularly if the child is male (18). In accordance with age emphasis (12), control should pass to the oldest son. However, the degree of respect due older siblings (12) does not often appear strong enough to overcome the other centrifugal forces. It seemingly takes the increment of respect due between generations (11) to overcome these centrifugal forces and even that is rarely sufficient. In Sanlei, there was only one ta chia ting with two males in the senior generation but this was an odd case, one brother's wife had deserted him (the family was discussed in connection with Figure 8). M. Wolf (1968) also found one ta chia ting in Hotien that had two males in the senior generation, but she too felt the situation sufficiently unusual to justify the occurrence as a special case in special circumstances.

Upon the death of the male chia chang, or at his withdrawal from active control, if all sons are married, it is almost certain there will be family division. However, care for the aged by a man's descendants (17) is so important that seldom will division occur if there is only one male in the younger generation. If there are several sons and a division takes place, it is likely that the old parents will remain with one son united in a stem family.

Phase III, the Phase of Replacement, lasts until the death of both parents. Given the high death rates, this stage may have been realized before any child is married. It does seem usual that the last of the old parents die while living in a home with one married descendant and perhaps, some grandchildren. An old couple with more than one married son usually prefers living in the home of the youngest but there is no cultural norm specifying the youngest son. I would suggest the following factors favor the youngest. Relations between a male and his first-born son are formal and harsh in Sanlei although parents seemingly develop greater skill in child-rearing with practice. The last child is often a family pet, babied by others, while both mother and father put less pressure on the youngest to succeed. The last child has been forced to adjust to older siblings (12) and has likely developed greater skills in smooth interpersonal relations. The end of Stage III produces one or more Stage I families and we are back at the beginning of the cycle. Note however, that the Stage I family is actually likely to already include children at its inception.

To summarize this explication of family cycles, note that with the historical demographic rates, it appears that a large number of people will be living in nuclear households at any given moment in time, as indicated by the 40% figure realized through the statistical approach (Table 6).

An examination of the situation from the point of view of an individual actor suggests that the stem family is the most common form in Sanlei with the occasional appearance of an extended family. Indeed, almost every person beyond 60 years of age in the village is living in a unit larger than the nuclear family. I collected thirteen fairly extensive life histories (not a random sample of villagers) and in all thirteen, the subjects spent part of their lives in something larger than a nuclear household.

It can also be seen that adoption, marriage, and descent events represent an attempt to realize cultural values. Almost all villagers agree that the two most important items in the eighteen previously listed are those with reference to worship of ancestors (1) and the care for the aged (17). These can best be realized by getting married and having several male children who, in turn, marry and have male children. However, since this will often not be biologically possible, the various mechanisms discussed above provide alternative solutions. In place of natural sons are adopted sons or adopted-in husbands for natural daughters with shared offspring. There are even adopted daughters as substitutes for natural daughters in order to later adopt in a husband. Finally, the adoption of a daughter as <u>siaosiv</u> is both an attempt to acquire descendants in spite of the high cost of marriage and further, to promote the harmonious relations within a household

necessary to maintain an extended family. These processes are a rational application of permitted alternatives to achieve culturally defined goals.

The improvement of economic conditions, the rapidly changing demographic rates, and the changing values originating from the larger modernizing society are undoubtedly going to change the typical family life cycles previously described.

The Basis of Extra-Familial Kinship Organizations

Families are building blocks in the larger kinship units, the clan and the tsu (lineage). The clan consists of people who have the same surname and are therefore assumed to have descended from the same ancestor although the genealogical details are unknown. Fried (1957; 1966) has referred to this assumption as "stipulated descent" and contrasted it with the foundation for the lineage, "demonstrated descent," where the exact details of genealogical connections are known. There are a number of border situations found in Sanlei Ts'un which are difficult to place in either category.

Usually a surname was said to be established by some particular historical individual from whom generations are numbered such that most people know the number of their own generation. It is assumed then that although two individuals with the same surname may not know which is the most recent generational ancestor they share, i.e., eighth

or tenth, they do share the first. Given sufficient depth of generations and the fact that there can be a wide age spread between the youngest and oldest individuals in a single generation, there is little relationship between genealogical generation and physical age. For example, one of our assistants in his twenties found a man with the same surname in a nearby village. Although the villager was over seventy, he was numbered three generations later. They both read a newspaper which was delivered all over Taiwan and carried news items devoted to the activities of people with their surname. They considered themselves distant clan relatives (ch'in t'ang) and the old man, with a smile, referred to our young assistant as great uncle. Even within shallow-depth American families, a man will occasionally be older than his own uncle.

All of the men in Sanlei surnamed Liao considered themselves to be ch'in t'ang. The Liao group which founded Sanlei all came from the same village in Chuan Chou, Fukien and other Liao migrated later, some from the same village and some from communities in the same county but not in the same village area. For one larger group of Liao, descent was demonstrated but for the balance, descent was merely stipulated.

One area difficult to classify according to the above scheme is due to the fact that several generations after the establishment of the Liao name an event occurred,

the result of which caused one Liao to pledge for himself and his descendants never to eat the head of the chicken. Thus, the Liao in Sanlei are divided into two subdivisions neither of which can trace actual descent: "those who eat" and "those who do not eat" chicken heads. Those who do not eat chicken heads regard themselves as closer relatives than those who do, for obviously they must share an ancestor more recent in genealogical depth than the original founder. In spite of this shared genealogical relative who was nearer than the founder, descent is still not really demonstrated. A Liao usually called both kinds of Liao ch'in t'ang and distinguished the two subdivisions by means of reference to eating or not eating chicken heads. There is no similar "in-group" feeling for those who eat chicken heads, a local delicacy.

The second area difficult to classify revolves around another kind of question as to whether or not descent is truly demonstrated. Sometimes a significant individual will compose or commission a poem to be written. He gives his children the first word of the poem as a middle name; grandchildren, the second, etc. The poem may continue to be followed or be abandoned by some or all lines of descent. If two people have the same surname and the same middle name, they compare father's, grandfather's, etc., middle names and if identity is established, they assume they have a common ancestor, i.e., the poem writer

or commissioner even though neither can really trace the chain of ancestors linking themselves to him. For example, if two men share the seventh word, their fathers the sixth, and grandfathers the fifth, they assume a shared ancestor eight generations earlier although neither has knowledge of any ancestors beyond grandparents. There are two such poems in process in Sanlei Ts'un, one of which is registered in the Liao Temple[11] near Taipei.

The poem system is not wholly accurate as a basis for establishing relationships because, for religious reasons, a child may get a unique middle name or someone who is not a regular descendant may start naming his descendants according to the poem. In this case he will match the generation number of his child to the poem word that has that generation number. After several generations pass, it is possible that no one would know that a line using the poem did not truly extend back to the poem writer or commissioner (or _vice versa_). Thus, although lines using the poem are assumed to share an ancestor closer than the founder, once more descent is not truly demonstrated. Nevertheless, people sharing a poem name are felt to be closer relatives than people not sharing one.

The above beliefs define a number of groups in the village: those named Liao,[12] Liao who do not eat the chicken head, and two non-inclusive sets of Liao who are

following a poem. However, none of these groups are a very important part of village social organization. They are consanguine groups and consanguine relatives are closer than non-relatives and this fact does play some part in establishing social relationships such as friendship, work exchanges, money lending, etc. The groups do have some importance for socio-political events for factional leaders often utilize kinship identities to solicit support. However, none of the above groups can really be defined by corporate holdings other than burial plots or even by ritual.

In only one case does a group approach the definition by Hu (1948:10), membership may be "spread over a wider region, it has its focus in one community which is always associated with ancestral graves and the ancestral hall." There is no ancestral hall. However, about fifty years ago, a Sanlei villager returned to his family's original village in Fukien to visit. Among other things, he registered people in the old ancestral halls and copied genealogical histories and became intrigued with the large lineage burial plots found in Fukien. Upon his return to Taiwan, he managed to unite three of five descent lines from a single man in establishing a single large and elaborate burial plot. (The area surrounding Sanlei is rated particularly highly in terms of feng shui[13] for burial and possesses many elaborate tombs.) Earlier burials of some

of the deceased in the three lines were collected from their various resting places and placed in the site and the subsequent burials of descendants of the three lines have continued, thus creating and maintaining a corporate group.

The meaning of the phrase, three descent lines, must be explained. In the original village in Fukien, a man had five sons. After he died, the five sons with wives and children separated into five families who all migrated to Sanlei. Descendants of each of the five continue to identify themselves as members of separate groups, each focused on one of the five brothers. Although villagers call each of the five groups a fang, the term has been translated in various ways in the traditional literature. Based upon work by Lin, Freedman calls fang a sub-lineage (1958:36) while H. C. W. Liu (1959:99) terms it a branch or sub-branch of a clan, literally "house." Use of fang in Sanlei does not seem consistent with these definitions but instead follows the pattern described by Cohen (1969: 167), i.e., fang is applied to patrilineal descent unit segments of various sizes and complexity even to the extent of labeling the nuclear family units in a single ta chia t'ing (extended household).

Villagers distinguish the collective descendants of each of the five brothers as separate fang, each numbered in the original birth order of the brothers. Thus,

first fang refers to the descendants of the oldest brother. There was originally a process of fission into five fang. The man who visiting the mainland managed to fuse three of the five into this one ritual unit which does not have a distinct classification, although acting as a corporate group. The basis for the fusion merely seemed to be the willingness to contribute labor and money to build the elaborate tomb. Although individuals continue to keep track of the separate fang, this combination of three is the only large ritual kinship unit in the village. The members (descendants) gather once each year to clean the grave and worship, a process consuming about four to five hours.

The Compound

In a discussion of the varieties of forms lineage organizations assume in Southeastern China, Freedman (1958: 131-3) creates a continuum with ideal types A at one end and Z at the other. Z is large (2000 to 3000 members), rich, segmented, and heterogeneous in reference to the social class of its members while A is small (200 to 300 members), poor, and relatively homogeneous. The only agnatic groups larger than a single family in Sanlei (other than the combination of three fang described above) which regularly function as units and which own property in common are smaller than the A model at one end of the

continuum described by Freedman or even those found by Gallin in Hsin Hsing (1966). Rather, they are closely similar in form and function to those described for a Hakka community in South Taiwan by Cohen (1969:167-182) although land owned by a lineage segment and rotated among members is extremely rare in Sanlei. This agnatic unit which owns a piece of property in common (a kung t'ing) approximately fits Freedman's definition of a compound: an agnatic group which "although occupying one set of dwellings, is or may be subdivided into distinct kitchen and property-owning groups" (1958:36-7). The separate chia (family) or hu (household) were all related agnatically but the relationships were variable. Each member chia had its own chia chang (head) and the senior chia chang with respect to generation and age was the head of the compound although his rights and duties in this connection were minimal.

Worship in the compound in Sanlei is not like that described by Gallin (1966:239) nor Freedman (1958:56-58) since both distinguished the domestic worship of ancestors from the worship by higher-level agnatic groupings. After pointing out the above, Cohen (1969:170) describes a merging of domestic and compound worship in the single kung t'ing for each compound in the Hakka village which would apply equally well to Sanlei. No family in Sanlei which was part of a compound maintained the separate worship

area for its own most recent ancestors as described by Gallin (1966:239) for Hsin Hsing.

In contrast to many other reports, in Sanlei the central unifying element in worship is the hsiang lu, ancestor's pot or censer, rather than the ancestor's tablets. This difference is explored more fully in Chapter VI but introduction of the fact is necessary to the current discussion. The basis for membership in a compound is problematical, but certainly involves an agnatic relationship. However, there are other potential members of the compound, some with even better credentials for membership, who live and worship elsewhere. Cadet branches which are established in another living unit may return for common worship for a number of years, to be ended only with the endowment of a new ancestor's pot by carrying ashes from the original pot in a red paper envelope from the old kung t'ing to the new one.

A single Liao "compound" is illustrated in Figure 12. One part of the diagram consists of a kinship diagram of the descendants of Liao Chin-I, but omits those who are dead, adopted-out, married-out, or moved away except when necessary to indicate genealogical connections. Currently, there are six legal and actual hu (households). Each hu is a nuclear unit, indicated with a letter, i.e., A. B, etc., and with its respective chia chang (head) indicated by cross-hatching. The second part of the diagram is a

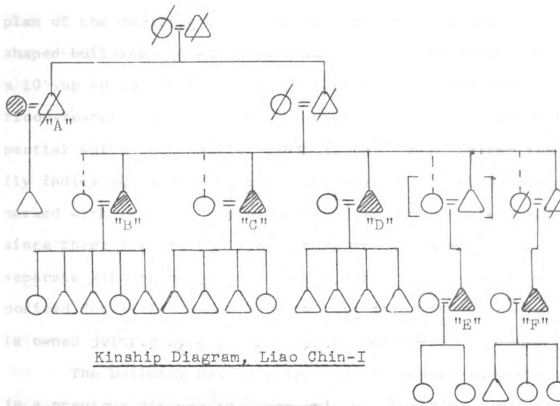

Kinship Diagram, Liao Chin-I

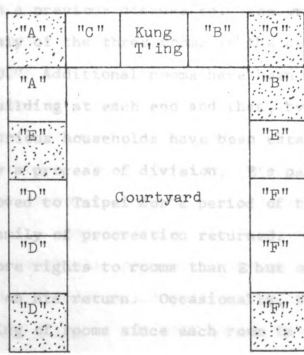

Note
In the kinship diagram, each chia is identified with a letter which also designates the owner of the rooms in the dwelling unit. The kitchen for each hu is indicated by dots. The chia chang of each family is identified by cross-hatching. The kung t'ing and the courtyard are owned jointly.

Building Diagram, Liao Chin-I "Compound"

Figure 12. Kinship and Dwelling Diagram, Liao Chin-I

plan of the dwelling unit, the previously described U-shaped building. The building is divided into rooms (10' x 10' up to 15' x 15') based only on the roof-bearing floor-to-ceiling walls but some rooms are partitioned with partial walls into smaller subdivision. Each nuclear family indicated on the diagram individually owns the rooms marked with its identifying letter. It can be noted that since there are six families, there are six kitchens, a separate kitchen being part of the definition earlier posited for each household. The kung t'ing in the center is owned jointly by all the compound members.

The building has developed in the manner suggested in a previous discussion. The original building consisted only of the three rooms in the center of the base of the "U." Additional rooms have been added to the original building at each end and then, by extending the wings. The various households have been established at various periods by a process of division. E's parents and his siblings moved to Taipei for a period of time while only E and his family of procreation returned. Obviously, E's father has more rights to rooms than E but space was easily made for E on his return. Occasionally, there has been some juggling of rooms since each room is owned by a separate household.

However, the kung t'ing is owned jointly by all and used by any member unit for worship or entertaining guests.

Indeed, it appears that any descendants of Liao Chin-I, the founder of the compound, have certain rights of worship in the kung t'ing. The chia chang of B, the oldest male in his generation, is recognized to be in charge of the room for tax purposes or for planning ritual events, but he regularly consults the old woman in A. Anybody in the compound can carry out the required daily worship, morning and evening, for the entire compound but it is considered best if the worshipper is an older male. Individuals take turns but with no rotating regularity. For worship, one individual may represent the entire compound but often several may participate. For special worship in the evening on the first and fifteenth of the lunar month, food sacrifices are prepared in each household and taken to the kung t'ing for worship together and at that time, an older male usually makes special remarks. Each family takes back its own food to consume after completing worship. Special holiday worship may be in this manner but there also may be a single large feast, potluck fashion.

Contributions of money for religious purposes (incense sticks, paper money, room upkeep) are contributed by each family on the basis of ability to pay. However, the kung t'ing is not kept in the best condition as suggested by an appropriate proverb, "What is public is for everyone's use and no one's responsibility" (see Glossary C).

In summary, the "compound" is a corporate kinship unit which functions jointly for ritual purposes, and owns property, the kung t'ing, in common. There are several such units in Sanlei. In worship, they are all like the previously listed Hakka community (Cohen, 1969) in this merging of domestic and compound (agnatic unit) worship and unlike the communities described in the reports of Gallin (1966) and Freedman (1958) in which there is a separation between domestic and compound or lineage worship.

The crucial item in the ancestral ceremony is not the ancestor tablet although these are occasionally present but the ancestral incense pot, hsiang lu. The ancestral table which occupies a central place in each village kung t'ing (see Figure 4), always has at least one ancestral pot and almost always a god's pot in addition. Sometimes there is more than one ancestral pot, each with a different surname. An adopted-in husband often brings his own ancestor pot with his own surname. Given the high incidence of adopted-in husbands that have occurred over an extended period of time, this pot multiplication is quite common. Additionally, some women occasionally bring in their family ancestral pots, especially when they were the last of a line. Pots with different surnames are usually separated by a small board fence in accordance with the belief that ancestors with different surnames fight. Worship of all pots on a single table is performed regularly.

Occasionally the origin of a particular pot but not its name is unknown but worship dedicated to it always continues. In one extreme case, one table has four distinct pots each with a different surname and another, three.

A means to determine the number of active agnatic kinship units (ritual or religious families) is the incidence of ancestral tables, counting the compound then as a single unit. As previously listed, there are 66 hu (households) in Sanlei but there are only 50 ancestral tables. Three households do not have tables and do not worship ancestors; two of these are Mainland soldiers living alone and the last is a common-law marriage, contracted late in life, with no offspring, natural or adopted. In 44 households, the household and worship unit are identical. The remaining 19 households share 6 tables. In other words, there are six agnatic compounds of the form described above, the number of households comprising each distribution as follows: 6,4,3,2,2, and 2. A compound of two households may be much larger in number of people than might be expected. In one compound, the two households have 29 members, the 19 of Liao Mou-tu (his kinship diagram was provided in Figure 5) and the 10 of his younger brother, Liao Mou-ti.

Cooperation between the family units within compounds tend to be more frequent than between other family units which are only neighbors. Although it often appears that the whole village rather than a single family

is responsible for enculturating each child, this is especially accentuated within a compound. Because children wander in and out of each other's rooms (between households) and are nurtured by any available adult, it took me a long time to identify compound children with particular nuclear family units. That is, I could identify a child as belonging to a particular compound but not as easily identify which family within it. Also, although women neighbors frequently shared work tasks together such as grinding rice, and took turns with some tasks so one could have time off for other things, i.e., one woman might prepare dinner and care for the two sets of children, these two practices were also more extensive in compounds. With rare exceptions, only in extended families or compounds could the only adult female in a family with small children have a whole day off to work in the fields. Women took turns for almost everyone preferred the relative freedom of field work. Additionally, there was the concomitant benefit of a periodic contribution of income to a family unit.

In spite of the fact that men usually claim the break up of compounds and the division of extended families is due to conflict among women, the village data suggests that the converse is also true for almost every large kinship unit that did exist in the village contained women who got along and who cooperated with each other in

rotating work responsibilities. In other words, although women may be the key to the dissolution of family structures, they may also be thought of as the essential glue which holds them together. Note that the adult male occupations in the village are quite heterogeneous, i.e., rice farmer, tea farmer, tea processor, miner, etc., while their wives' occupations in the village are relatively homogeneous, housekeeper, cook, tea picker, etc. It is much easier for a woman to substitute for any other woman than it is for a man to substitute for any other man. I do know that conflicts over men's occupations within a household lead to family divisions because each feels the other is not contributing his share (for an extended case study see M. Wolfe, 1968). Because men's jobs are so different it is hard to determine equality whereas women's jobs are so nearly identical, this can not be a similar source of conflict. This discussion should not preclude consideration of the fact that there are many other sources of conflict in the large family household in addition to those arising over economic contributions. Nevertheless, all compounds include women who cooperate very closely with each other and all extended families include women who cooperate even more closely with each other.

The compound frequently acts collectively as a political or economic force in the village. This is possibly due to its internal identification as a kinship

unit, but may be merely due to the fact that the typical unit is in the shape of a "U" with doors rarely opening on other than the inner court-yard. Interaction is much more frequent among the compound members as opposed to outsiders because of propinquity and convenience and increased communication often leads to mutual understanding. In any case, the "compound" is highly valued, not as good as the ta chia ting (extended family), but much better morally and economically than scattered single household units.

CHAPTER VI

VOLUNTARY ASSOCIATIONS

The third category in the discussion of the social organization of Sanlei Ts'un is "voluntary associations." This is merely a convenient label for it should not be construed that the social units discussed in the two preceding chapters lack aspects of volunteerism. For example, although the farmers' association is a formal unit, membership and participation in governance is voluntary. Even though processes creating initial membership in kinship units may be voluntary, i.e., birth, adoption, arranged marriage, continued participation is voluntary, particularly in such larger units as the "ta chia ting" or "compound."

Money Lending Club

Sanlei Ts'un has money lending clubs similar to those which have been described for a Japanese village (Embree, 1939:138-147) and for mainland China (Fei, 1939: 267-74). The clubs range in size from ten to thirty members with a typical size of about twenty. Clubs are set for a certain amount, say $300.00 per man. The first night the club meets, everyone pays the club organizer

$300.00. The second night the club meets, everyone writes a bid somewhat less than $300.00 (in even dollar amounts only) on a piece of paper and places it in a hat. After the bids are mixed up, each is lifted out with chopsticks and placed on a table in order of removal from right to left with the low bid declared the winner. In case of a tie, the bid on the right is the winner. The winner collects the amount of his bid from each member except that any previous winner (including the originator, winners are now called debtors to the club) pays the full original amount of $300.00. This process continues until everyone has collected once, so of course, only those who have not yet collected place bids.

Since early collectors bid less than the required amount, it is possible to wait until the end, each time paying less than the full amount, and yet collect the full amount from every other person. That is, with 21 members a participant would pay 20 times and collect once from the other 20 members. If every bid was $300.00, everyone would break even, but a typical early bid is $250.00 to $260.00 dollars, but the person who collects at this $250.00 rate will eventually, as a debtor, pay the full $300.00. Even if the cash is not needed, one should put in an early bid under $300.00 because the money could be placed in a bank or post office, earn interest, and eventually be paid back without interest. The amount of the potential interest income determines early bids for

those who do not need the money. In essence, a man is in a legal gambling situation in a country which has declared any gambling other than the official government lottery illegal. Although the period between bids in the traditional accounts are of varying lengths up to once a year, meetings in Sanlei are always monthly. The largest club in the area during our residence contained 30 members and therefore, took 30 months to complete.

There are advantages for every participant in the club. The originator obtains a large sum of money which is paid back monthly without interest. He has the responsibility to collect the money from each person within three days of the bid and turn it over to the winning bidder, and he sometimes provides small refreshments such as soda pop and cookies. Each member also benefits as he has a ready source where he can get a sizeable sum of money merely by placing a low bid. Furthermore, by joining the club, he directly performs a service for the originator since the latter always furnishes a reason for his need for money. Frivolous needs would be rejected. The monthly meeting is also a social situation, consuming an hour or more of one evening each month. It is also a major topic of discussion before the meeting with speculation about the size of the winning bid and after the meeting, there is more comment about why someone may have needed the money so badly, indicated by a below average bid. Finally, even if no profit is realized, the club is an enforced

method of saving for it is difficult for anyone otherwise to accumulate a large sum of cash at one time. Membership in a money-lending club necessarily means that at least once during its term a man will have a sizeable amount of cash in a lump sum.

Since it is necessary that each potential member be trustworthy, a club membership list indicates the general nature of relationships between people. Rarely does the participation in a single club extend beyond the confines of the li and usually is restricted to but one or two villages. Some villagers have attempted to form or join clubs without success because they are not considered trustworthy. For example, a Mainland soldier in the village who is an adopted-in husband with four children needed money for the medical expenses of his wife's ailing parents. Other than a slight fondness for beer (15 bottles or so per month) he has turned almost all his money over to his wife to manage. Moreover, he is a steady worker and as a dynamiter in the mines earns $100.00 per day, considerably more than the average villager, but he was unable to establish a club. As previously stated, Mainlanders are still regarded as outsiders who are not to be trusted. Other villagers have failed to establish clubs in the past and some are not even permitted to join clubs. Yet, many women are able to establish clubs and it appears that women usually constitute about half the membership. In this regard, most village women obviously

rank higher in the status system than some men.

Female participants in money-lending clubs are of two structural types. One type consists of those who are heads of households participating with household money such that any profits which are realized will be returned to the family pool. Since men are usually the heads of households, in a sense, women filling this role of head are the equivalent of men. Historically, female heads of households in Sanlei have always participated in money-lending clubs.

The second structural type consists of women who are not heads of households and who participate with their personal money. And profits which they realize are retained personally rather than contributed to the family pool. As previously stated, only women have this personal money which does not belong to the family pool (See Chapter III). Some villagers claim that 25 or more years ago women had personal money but did not use it for money-lending clubs but other villagers disagree, arguing that women always participated in the clubs with personal money. In any case, women do use their personal money now to join the smaller clubs and eventually, accumulate enough for any club. One older active village woman has accumulated over $10,000.00 in personal money, the equivalent of the amount a man would earn in about eight months of full-time work. The opportunity to accumulate such funds does give women a significant level of economic

independence and thereby, elevate their status and security.

Money-lending clubs are extremely popular in Sanlei and about six or seven are in process at any moment in time. The participants are drawn from about two thirds of the households; some households contain more than two participants, i.e., the man participating as a household head and his wife participating with her personal money. Some men belong to several clubs simultaneously, but women usually belong to only one at a time. In one case, Liao Chi-hsing, a farmer at the middle level of income in the community, belonged to four simultaneously at a cost of over $1,000.00 monthly.

With their inter-locking memberships, money-lending clubs are a unifying force in the village. Both males and females participate in the same clubs and either sex may be a club originator. This is one of the few village organizations in which both sexes formally participate competitively as relative equals. However, because of other kinds of values, a husband and his wife do not participate in the same club.

Chieh Pai Hsiung Ti (Sworn Brothers Association)

A sworn brothers association is a pseudo-kinship group of males who are friends and age mates, i.e., within an age span of two to four years. Each association is formed by a group of twenty or so young men when they are between the ages of 17 and 24. Rarely do the members live more than one or two villages apart at the time the

association is founded. An association continues in existence until the death of the last member although the occasional participant moves away and drops out or just disappears. At the inauguration, the group members are fairly equal in social class and economic position. In spite of the later upward and downward mobility of its members, a group continues to act. Fellow members orginally are only friends or are linked through certain kinship relationships, i.e., cousins are often fellow members but real brothers rarely belong to the same association.

At any given moment in time, an examination of the details about members of a single association easily yields data on life expectancy, social mobility, and migration rates. The information is readily available because a roster of membership is made at the inception of the club. Since the members are friends, many details of each other's socio-economic situation are known and because the club continues to function and meet collectively once or twice each year, such information is kept current. I will illustrate briefly with two clubs.

One association which is associated with the god Tai Tzu Yueh (See Below) was formed around 1941 by 18 young men who were all within a year or two of age 23. At the time the association was formed, all but one of the founders lived in Talei Li (the exception had formerly lived in the <u>li</u> but had migrated with his family to Hsin

Tien). All 18 had gone to the Japanese school in Pouti together and a few had gone on to junior or senior high school. It appears that the group came from li families which were wealthier than the average for the li.

By 1966, 15 of the members were still alive and although only 9 continued to live in Talei Li, all 15 still come together at least twice yearly for a meeting. Two men are only farm laborers, three became fairly wealthy, and the rest are in the middle or lower upper level of income (based on Sanlei standards). One man, a son of a fairly wealthy T'oulei family, is a dentist in Hsin Tien and is very active in township politics. Of the six who no longer live in Talei Li, one lives in Keelung and has something to do with tea exporting; one lives near Taichung where he inherited some land from his father's brother; one lives in Hsin Tien (the dentist); and the other three all live in Taipei city, two work in a meat-canning factory and the last is a partner in a very small restaurant.

The second example was founded by twelve young men living in Sanlei and Tzulei just before they reached draft age. In its eight years of existence, all twelve boys completed their military stint, and seven have subsequently migrated to Taipei City. The association meets twice yearly, once during the Matsu Procession (See Chapter VII) when almost all migrants return to the village for the celebration. Some of the club members who live in Taipei

claim they will come back to take over the family farm when the older generation is no longer capable but others say they will never live in a village again because the city is so much more interesting.

The associations fulfill a number of functions in the community. For one, they are a fellowship unit. Most units get together once or twice a year for a dinner at a site which rotates among the homes of the members. The party lasts several hours and usually features consumption of great quantities of food and alcohol plus the usual drinking games and joking behavior. The host provides the food and drink but each gueat contributes an amount of cash which is determined by the current value of pok as a hedge against inflation. For example, a typical contribution would be the sum required to buy two chin of pork. The party itself has an integrating effect for the unit.

A second function is as a mutual insurance association. Members contributed at fixed rates for certain events affecting fellow members although the terms vary for each group, established at the time it is founded. A list of a set of contributions for one association which is somewhat more elaborate than most follows (one chin equals 1-1/3 pounds):

2 chin pork	Birth of Son
2 chin pork*	Marriage of Member
2 chin pork	Death of Father
1 chin pork	Death of Mother
5 chin pork	Death of Member

*Plus attendance fee at wedding

Any member who has a son between meetings brings turtle-dough cakes to the next meeting to distribute as consumption of turtle-dough cakes helps spread good fortune. For any member of a club, those life crises events which usually cost money are supported by fellow members.

Another function is religious for worship is always part of the activities of an association meeting. Most units are organized around a particular god with whom the association establishes a special relationship. The host for the next meeting keeps the statue of the association god (which the association usually purchases) between meetings and he is responsible for the required special regular worship activities dedicated to it. The statue stays on the ancestral table in his kung t'ing until after the meeting when it will be carried to the next host's home. Also, the association may participate as a unit sponsoring part of the activities on special religious holidays or may act to refurbish the temple. One big "Fire Purification Ceremony"[1] was originated and sponsored by three cooperating sworn brothers associations.

The unit also functions in social control. At times it has disciplined transgressors; association members mildly threaten young men who have been too

unfilial or frighten older men with threats of physical violence. The threats have always been sufficient to insure proper behavior. In periods of the year when there is high probability of stealing such as near New Year's Day, or after a theft has occurred, various associations have taken responsibility for a night patrol in the village. Thieves from outside the li were caught twice in the last three years and were severely thrashed before turning them over to the police. The unit also supports its members in conflict or adversity. Political support for a fellow member is near automatic and it is significant that most local leaders have connections with the larger kinship units discussed in the last chapter and are also members of fairly large sworn brothers associations. Local political leaders attempt to enlist association support and several usually make courtesy calls long enough for a quick drink and snack at various association meetings.

There are few village men who fail to join a sworn brothers association as young men. A few groups have added members later in their existence although most stick to the original membership roster. A migrant to the area may establish good relations and be invited to join an ongoing group whose members are his approximate age. There are many similar clubs all over the area near Hsin Tien but there is no structural equivalent for women.

God's Associations

A god's association is almost identical to the sworn brothers association and is seemingly formed in the same way with the same kind of membership but it always has an identification with a single god. The primary difference is that the sworn brothers association ends with the death of its members but a god's association membership is inherited by a man's oldest son or some other male relative if there is no son. Since there is a higher probability of adding additional members to god's associations, they tended to be much larger.

I was never able to determine exactly the differences distinguishing the establishment of each. It did seem that if a sworn brothers association prospered and its members lived a long time, there was a tendency to continue it by inviting sons as replacements and adding other members so that it eventually evolved into a god's association. In no case did a son and father both belong to the same association at the same time.

There were two god's associations centered in Sanlei and compared with the sworn brothers associations, both were larger, contained members dispersed over a greater territory, involved greater class distinctions, and of course, had members covering a greater age span. The two god's associations in Sanlei both had regional political leaders and wealthy men among its members although men of this type do not live in the village.

Social Effects of Men's Voluntary Associations

Some manifest social effects of men's voluntary associations were already pointed out, i.e., fellowship, insurance, social control, religious, etc., but there are latent effects which are also important.

As previously stated, the village is a prime unit for personal identification and the values associated with membership in a village social unit would tend towards extreme isolation of the community from the rest of society. However, a peasant community, by definition and by fact, is part of a larger society and cannot be an isolate. In addition to the establishment of relationship across community boundaries on the basis of kinship (agnatic and affinal), men's voluntary associations serve an identical linking mechanism.

In any society such as China in which kinship is an important organizing principle, some men have few or no kinsmen because biology is a significant, if not exclusive, determinant of many kinship relations. That is, some people are barren and some family lines do not prosper. Sworn brothers associations provide an acceptable cultural alternative to the relatively kinless man who might be otherwise isolated. The very name itself (sworn brothers) evokes recognition of its basis as a simulated kinship group.

Finally, the individual member gains emotional support from his membership. Although most social

relationships in China are hierarchically structured, i.e., landlord over tenant, elder over younger, father over son, etc., sworn brothers associations are a collectivity of equals. Even where there are great differences in status, the differences are relatively buried for interpersonal relationships, especially at association meetings. Since it would probably be impossible to bury a father-son or older brother-younger brother status difference, these two types of relationships are never encompassed within a single sworn brothers association.

Because of these various reasons, manifest and latent, almost every man belongs to a sworn brothers association but no man belongs to two. Fewer men belong to god's associations which are not exclusive, i.e., a man may belong to more than one (most members of a single god's association also belong to a sworn brothers association). Indeed, one politician in Hsin Tien belongs to six god's associations including both of those centered in Sanlei Ts'un.

Neighborhood

The village is informally divided into three neighborhoods although the physical boundaries separating them are but minor barriers. One barrier results from the fact the village slopes up a hill while a small mountain runs down towards the village at right angles to the slope. A very small brook (18" wide) runs down the mountain towards the village as if it were going to bisect

it but, near the center of the village, turns and runs down the village slope. At the turn-about spot, a concrete pond (five feet by ten feet by eight inches) was built for convenience in washing clothes. From the pond on down the slope, village houses could pipe water into their houses by gravity feed from the brook by means of rubber hoses, but from the pond up the slope, it was necessary to carry water in buckets. This activity gives a name to two sections of the village: shang shui (above the water) and sya shui (below the water) although the dividing line is not clear. The smallest and least significant neighborhood unit is separated from these two neighborhoods by the river which runs down the middle of the valley (See Figure 2).

The "above the water" section contains the original village settlement and continues to be the dominant section in village affairs. Most of its chia chang (family heads) are surnamed Liao and three of the four not surnamed Liao are related to a Liao; two are related by marriage and the third is the step-brother diagrammed in Figure 8. Important individuals in this section include the Li Chang (mayor), representative to the farmers' association, and the Small Unit Head (local subunit of the farmers' association). This section also includes the village temple and the store which has the largest sales in the village and which is owned by one of the wealthier Liao families whose head is an informal leader and a member of

the permanent temple committee.

The chia chang in the "below the water" neighborhood possess many different surnames. This area has the second ranking store in terms of sales but it is more modern with the only freezer and one of the two television sets in the village. A higher percentage of its population is engaged in other than agricultural pursuits. This section also includes both the active village tea processors who purchase tea leaves from farmers.

The portion across the river includes two "compounds" (one of which was illustrated in Figure 12) and two isolated households. This neighborhood may best be viewed as a residual category for there did not appear to be any behavior as a collective unit and no competition with the other two neighborhoods which sometimes compete with each other.

For example, the village had an opportunity in 1964 to establish a central water system which required building a water tower and installing a pump and lines so that each house could have running water. To participate, the village would have to achieve two-thirds approval in an election and raise half the requisite cost locally by the informal process previously described, i.e., by contributions rather than by formal taxation. Residents of the "above the water" neighborhood were naturally in favor of the construction since they did not have any running water. "Across the water" people were neutral, willing

to support the majority but with a tendency to favor the dominant neighborhood for the two "compounds" located across the river were both agnatic relatives of the Liao who were the most common in the dominant neighborhood. The "below the water" people were against the installation for most already had a form of running water (the plastic hoses) and could gain few benefits for the large investment which would be required.

Active campaigning ensued. Arguments on one side appealed to village pride and to unity, the entire village working together so most would benefit while the opposing position stressed costs explicitly, but tapped some underlying resentment against the dominant neighborhood. Some appeals to the expenses required found favor among some "above the water" residents. The sworn brothers association cut across neighborhood divisions and stayed neutral, i.e., they did not actively campaign for either position. Since the Liao relatives in the "below the water" neighborhood voted on the basis of their pocketbooks and not on the basis of kinship, the proposal was defeated. There appears to be little local resentment and most of that is directed at a higher level government unit, the county, which set the district to include the entire village rather than the part which did not already have running water.

These two neighborhoods became factions which were mobilized around a specific issue, installation of the

water tower. Normally, there is little competition between the neighborhoods although the "progressive" and "traditional" factions within the village do tend to be localized with the "below the water" and the "above the water" sections respectively although neither is totally identified with a single neighborhood. The neighborhoods do have some significance for visiting patterns, i.e., evening conversational groups are clustered in each of the two neighborhoods and at small weddings, if only a few guests in addition to kinsmen are invited, they tend to be drawn from the immediate neighborhood.

The lin (neighborhood) was mentioned previously as a formal political unit consisting of 10 or 11 contiguous households and headed by a lin chang (neighborhood leader). The lin is not an important informal social unit in Sanlei. It functions are required by higher administrative directives, but since it was seemingly created on the basis of geography (perhaps by an administrator looking at a map) rather than on the basis of social reality (visiting and friendship patterns), it is not a significant unit in structuring social life except for dividing the village into equal sized formal units.

Sanlei Ts'un Temple Association

The major unifying element in Sanlei village is the temple, an imposing modern structure (35 feet long by 18 feet deep) possessing an ornate roof. A large paper money

burner sits outside the east door at one end. Inside, directly opposite each of the three bright red doors are three large niches in the wall, each of which contains from five to nine gods.[2] In front of each niche are flower stands, flower vases, and worship tables (see Chapter VII for further details).

The temple is open from early in the morning until late at night and is seldom empty. It is used by children as a playroom, particularly on hot or rainy days, but when the kids yell too loud or run too fast, they are chased out. In the heat of the day, two or three men may be napping on the cool floor. Visitors to the village sit on the benches and chat. An occasional chess game is played on the bench with its crowd of kibitzers. Village champions challenge salesmen at $1.00 per game, but salesmen rarely win, perhaps because they are being politic but perhaps because the kibitzing is not neutral. Advice is given frequently and openly and at times, it appears as if the salesman has challenged the whole village. Of course, there are a few people who come in to worship or ask a question of the gods. In the evening, between dinner and bed-time, men sit on the porch or on the benches and chat. The local bus picks up and discharges passengers in front of the temple.

The temple belongs to the entire village; each resident shares fully in its ownership and a new resident is automatically a participant if he so desires. The

temple is the central focus for various religious festivals that punctuate the yearly cycle. There is a major temple committee, selected by a process of consensus, consisting of the senior and most respected men in the community. The committee is in charge of a small plot of paddy land, the income from which goes to support the temple caretaker. The committee is also responsible for the maintenance of the temple and for coordination of temple affairs.

Those religious affairs which are regular, occurring on a standard date each year, are not managed by the major temple committee. Rather, each chia chang or his representative comes to the temple and casts the shen pei[3] with its falls interpreted as a yes or no. Whoever obtains the most yes votes before receiving a no is the Lu Chu (pot master) in charge of the next event. He has assistant potmasters on the spcial committee, one from each lin (legal subdivision of the village) chosen in the same manner. Potmasters have never been female but females have been permitted to cast the sticks to attempt the office and females are often assistant potmasters.[4]

The special committee is responsible for planning the scheduled event and raising the money to pay for it. If no one on the committee is experienced, a member of the major temple committee is usually added as an ex officio member.[5] A special committee will meet six or seven times for planning purposes, the members sounding

out village sentiment on issues between meetings. They may hire shamans or priests for an affair, a puppet show, or a Taiwanese opera, get police permission for the event, etc. After the budget is estimated, its cost is distributed to households on a basis of ability to pay in the informal process previously discussed and each assistant potmaster is responsible for collecting in his own lin. The final accounting of collections and disbursements is posted on the temple bulletin board but the accounting is never quite wholly accurate as wealthier families have paid somewhat more than is listed while some poor people are listed as contributors although they gave nothing in order to protect everyone from embarrassment. Contributions for a major event usually range from $10.00 to $200.00.

After the ceremony is over, people talk about how good the festival was. Entertainment usually lasts three days although police permission is difficult to obtain for a third day because the government is promoting austerity in connection with religious celebrations. Entertainment costs are less each succeding day, i.e., an opera costs $2,000.00 the first day, $1,400.00 the second, and $1,200.00 the third. People also discuss whether the committee has spent too much of the collection on food and drink for their committee meetings.

There are two major events each year which receive this full treatment, the Matsu procession and New Years.

With two different potmasters, each with their respective committees, twenty-five percent of village households are involved in temple work at a given moment in time without counting the permanent committee. There are minor events that receive lesser attention and also, recently there were two special "Fire Purification Ceremonies" a year apart. The first was sponsored by three cooperating sworn brothers associations who alone paid for it. The village united for the second and helped pay for it in the previously described manner with a potmaster and committee which was in addition to the other committees previously listed.

The temple was completely rebuilt ten years ago, supervised by the major temple committee, and paid for by contributions. Former villagers from all over Taiwan made donations, about one third of the cost borne by two brothers, sons of a former village resident, whose meat canning factory in Taipei was a financial success. The brothers were honored by heading the dedication plaque on the temple wall which listed all donations by names of contributors. The brothers subsequently returned more often on festive occasions and have also given job preferences to village men who go to the city.

Talei Li Temple Association

The temple in Sanlei is owned only by Sanlei villagers while the temple in Erhlei belongs to all of

Talei Li. The five villages have always participated in maintaining the li temple except that in the recent period, Wulei, as previously mentioned, has been taken over by Mainlanders who do not participate in li activities. Everyone in the li agrees that the Erhlei temple is at a higher level than Sanlei in the religious hierarchy. Other than for special events however, villagers in Sanlei and Szulei usually go to the Sanlei temple, and those in Erhlei and T'oulei, to the Erhlei temple although convenience is the only reason mentioned for the preference. It may be noted however, that the sets of villagers who prefer each temple are in perfect correlation with the sets of villagers who comprise the two regional li factions (See Chapter IV).

There is an Erhlei temple association board, similar to that described for Sanlei except that the membership consists of two senior men from each village in the li and an influential man in Erhlei is the effective informal leader in addition to being the formal head. Most affairs in the li temple (located in Erhlei) are run by this permanent temple committee although additional aides are selected by use of the shen pei. In accordance with the distribution of power in the li, if the head of an affair is from one end of the li, the chief assistant is from the other, and minor assistants are evenly distributed. However, the major permanent temple committee really runs the whole affair. The chairman has been

heavily criticized in the past[6] but has not been challenged for his post which he seemingly inherited from his father.

Religious affairs are celebrated with the same kind of periodicy described for Sanlei and on most occasions, celebrations are held simultaneously in both temples. In this case, the two committees cooperate, sharing the cost of the entertainment which alternates yearly in location between Sanlei and Erhlei. The cost is greater for Sanlei villagers as they are the only ones in the li who contribute to both temples. I was not confidently able to establish a reason for this fact but as previously stated, Sanlei villagers all came from the same village in Fukien and brought a god's statue with them from the Mainland. The other villages in the li were settled about the same time but each consisted of people from a variety of villages in Fukien. The big li temple was built first, all five villages united to erect it. A few years later, a group of men in Sanlei all named Liao decided to build a temple of their own to house the god's statue brought in from the mainland and did not obtain help from other villages in the li. Sanlei village was more integrated than the others in the li and has remained so with the village temple as a symbol of pride and a focus for the community. There is a suggestion of a chicken-egg type question in this explanation. That is, the community was sufficiently integrated to build its own temple; the temple was a force promoting community integration. Which comes first?

In the post-World War II reconstruction of the typhoon-destroyed temple, the Sanlei planning committee did attempt to solicit funds from other villages in Talei Li. They had a few initial refusals from influential leaders who claimed the li temple was sufficient so did not press the issue but withdrew with a claim that Sanlei could and would build a temple alone. Their success, the temple is more plush than the li temple, served to raise village pride and also provides a stronger in-group feeling although there is still some resentment over the failure of the rest of the li to cooperate.

For many years Talei Li and another li jointly participated in an annual thanksgiving festival. At first, the festivals alternated yearly between the major temples located in each li. After some time passed, since the other li was much larger, two festivals were held at that li to one in Talei Li. One of the festival events featured a cash award for the owner of the largest pig which had been slaughtered for the banquet. One year, a Talei Li resident entered a simply enormous pig, but the festival committee (a majority from outside Talei Li) selected a different pig as the winner after both had been weighed. Talei Li people claimed the chosen pig had lead weights in its stomach and they withdrew from the cooperative ceremony in anger. The conflict aided in uniting the people of Talei Li and although the event occurred eight years ago, it is still a frequent topic of

conversation, most repetitions of the story liberally sprinkled with "we" and "they."

The Temple versus an Ancestral Hall

In a discussion of the significance of ancestral hall associations in Chinese village life, Freedman (1958; 1966) reports they constitute dominant structural features of many communities in Southeastern China from whence the majority of Sanlei residents migrated. He also points out there are other kinds of social organizations in local communities such as voluntary associations (1958:92-5). Hsiao Kung-chuan (1960:278) contrasted a village dominated by an ancestral hall association with another village dominated by a temple association and suggested the two kinds of organizations may be alternative structures fulfilling identical functions. Topley (1968:19) argues that seldom would a village have both an active temple organization and an active ancestral hall association for such would likely lead to much disharmony. She suspects that both "ancestral hall and temple organizations must have been alternative forms for controlling village affairs--the one being based on mono-lineage villages," although the literature does not always relate the temple organization to village composition in kinship terms (1968:19).

On one level, Sanlei constituted an ideal situation for the establishment of a strong lineage village. Since the migrants who founded Sanlei came from an area of China

noted for its single lineage villages, there was considerable previous experience with lineage structures and, as noted previously, the home village on the mainland had a large ancestral hall association. Moreover, there was a single surname, Liao, which encompassed almost all residents in the early history of the community and still predominates. In spite of these facts, a community temple association evolved rather than a strong lineage organization. I suggest the arguments advanced by Pasternak (1969:551-61) concerning the role of the frontier in lineage development are more cogent than Freedman's contention that the frontier is a stimulous to lineage development (1966:163-4). In essence, Pasternak claims that the frontier required such "extensive cooperation for purposes of defense and environmental exploitation among unrelated family and lineage fragments" (1969:560-1) that lineages would not develop and become strong.

Sanlei data support Pasternak's position. Sanlei village was established in an area occupied by hostile aborigines who attacked so frequently, it was necessary to build a wall around the village and mount a regular guard. Developing the land also required cooperative work in terracing and irrigation. Any tendencies towards fragmentation such as the development of lineages would have been dysfunctional for it was necessary that the entire community perform as a unit to achieve success.

In fairness to Freedman, he also posits (1966:160) as contributing factors, the "extent of irrigation" and "the degree to which land is held in joint ownership", neither of which were significant in Sanlei.

Pasternak (1969:561) suggests that "only when the primitive and hostile conditions of the frontier have been somewhat ameliorated" that localized lineages may appear. Although the conditions in Sanlei have long since been peaceful, localized lineages have not emerged. The temple organization which developed out of the entire community on a cooperative basis has been successful, serves as a source of community pride as well as a community focus, and has continually enfolded each new resident into its structure. I suggest that the original frontier conditions inhibited development of a strong lineage. Creation of a community temple might be considered an historical accident, but once a social unit developed around it, the presence of the temple would continue to inhibit development of lineage organization and ancestral halls. The Liao brothers who enjoyed considerable financial success with the meat-canning factory in Taipei could easily have endowed an ancestral hall in the village, but instead, they made an equivalent contribution to the village temple and are now honored with plaques on the temple wall. I suspect that unless great changes occur such as the establishment of significant class differences in Sanlei, strong lineage organizations will never develop in the

village, especially in light of the fact that long-established lineages are disappearing throughout Taiwan.

Women's Work Groups

There are various work activities performed by women: some as a member of a team, some individually but in the company of others, and some as isolates working alone. Many of the work groups have existed with the same membership for many years. In general, most work groups are organized on an age basis which rarely exceeds a period of a few years.

Six days a week women wash, sometimes seven. There are three major washing locations in Sanlei Ts'un: one at the previously described artificial pond and the other two in the river, one close and convenient to the village center and the other upstream a distance across a narrow bridge. Some people wash in the morning and some in the afternoon, each wash requiring an hour or more of labor. Each woman is responsible for her own washing although occasionally, a woman will wash for a fee which goes into the regular family pool. Although some women wash individually, many wash in social groups although each person does her own. People frequently evaluate a woman's ability as a housekeeper on the basis of the cleanliness of her wash. While washing, there is considerable latitude for conversation, and although the women themselves are not consciously aware of the constraints of the pattern, there are seven regular washing groups, membership from day to

day rarely varying. Each of the seven groups has a constant nucleus although a number of other women attach themselves to each group periodically. If a woman is ill for a couple of days or more, her washing responsibilities will be borne by a kinswoman in her household; if she is not in an extended family, by a fellow member of her regular wash group.

There are three groups of women who grade tea on a piece-work basis. They work for any tea processor who requires sorting as there is no necessary relationship between a particular processor and a particular work group. The goal is to sort the leaves (high grade) from the twigs, pieces, and stems (low grade) in a flat bamboo basket, six feet in diameter, which holds processed tea. Four to six women can sit around the basket and sort together while chatting but, of course, it is also possible to work alone. The work is easy and with a half-hour's instruction, anyone can earn $2.00 to $3.00 per hour on a piece-work basis. This activity is usually performed by old women and occasionally by very young girls. Three groups of old women constitute the regular work teams, sharing equally in the piece-work income although quite aware that some women work faster than others. They work out in the courtyard when the weather is nice and in anyone's house who has space when it is cold or wet.

There are two other important income-earning work activities usually performed only by women, tea picking

on a piece work basis and orange-orchard weeding on a daily rate. Both pay more than tea grading and are much harder, employing young to middle-age married women. Once again, this is usually performed by regular recurrent groups although income is not shared. Employers from the village our outside hire a group by contacting one member of the group most of whom have one informal leader, an aggressive type in her forties who plans work ahead of time. She earns no extra money but seems to enjoy the power and prestige. Some individuals are hired as individuals and for smaller jobs, teams often break up into sub-units or even individuals.

Income from any of the above sources belongs to the woman's family unit as does men's income. However, two sources of income are not shared with the family and are considered the personal resources of females: that derived from making brooms and straw hats. This can be done only in leisure time when other work is not expected, i.e., the time between cleaning up the dinner dishes and going to bed. Once more, some women work individually, but others jointly cooperate and share income.

There are other kinds of shared work activities which are not involved with income, the housework such as cooking and cleaning as well as tending children. It was previously pointed out that women in extended families frequently share work or take turns and some women who are friends and neighbors often do the same. There are many

regular patterns. Some tasks such as grinding rice are done jointly together while for other tasks, they alternate, i.e., two women rotate care of both sets of children, preparing lunch, etc. Sometimes, a woman can get into the fields to work for an afternoon or even a whole day or they can take turns with time off to go to town and shop or take in a movie. Village women see movies more often than men, usually in the afternoon. A new bride in the village soon has her own circle of friends among women who are in her same age range.

Men's Work Groups

Men's work groups do not seem as structured as women's. As previously stated, the standard rate of pay for a day's labor for a man is $50.00 except there is an addition of a five meal bonus when the work is transplanting or harvesting rice. There is no bargaining in terms of ability or skill; instead, the better workers obtain jobs more frequently.

There are many regular units which trade labor, almost inevitably composed of relatives or sworn brothers. It is easy to keep track of records because one day's labor equals any other day's labor no matter what the activity. Although a day planting rice may be considered more difficult than a day spent weeding oranges, the five meal bonus for the rice work makes the two activities equal. There were 17 such work groups which had at least

one of their members in Sanlei, the smallest with two members (3 cases) and the largest with six (2 cases). Work groups of two men merely traded days, but in any group larger than two members, the accounting was managed like a bank savings account, i.e., a man deposited so many day's labor and withdrew the same amount. It was not necessary to see that each member balanced with every other individually, merely that each individual's total deposits and withdrawals matched. A man with but little land under cultivation was permitted to withdraw his deposit by hiring the team out and collecting their wages. Periodically, the books could be balanced by $50.00 increments for each day's overdraft.

However, more labor is acquired on a hired basis than on an exchange basis. A typical large work force for transplanting, weeding, or harvesting will usually include a combination of paid and exchange laborers. An individual will tend to hire the same men and be hired in turn by them. Often, a man may hire a man for wages with whom he sometimes exchanges labor. Many people say it is easier just to pay a man when a job is done, a one to ten day period, then to try and keep track of the records required for labor exchanges. Some work is seemingly exchanged only because it does promote a structure of mutual indebtedness between friends. For several village men, the amount they pay out in wages about equals the amount they collect. The larger land holders are the

real support for the many village men who are full time farm laborers or who are partially farm laborers and partially tenants or owner-operators.

Tea Processors

There are three tea processing households in Sanlei. One processor owns much land which he operates almost totally with hired labor and processes little more than his own tea. Fifteen years ago he was caught using false weights to buy tea leaves from Sanlei farmers and villagers have never trusted him since. He and his wife are isolated from the rest of the village in social terms and both of their children are living and working in Taipei. The couple are reasonably well-off financially by village standards and own the second village television set which they watch alone without guests. Just about everyone else in the village watches the television set owned by the village store.

The other two processors pay identical prices and offer identical services and share most of the rest of the village tea production except that part sold to a processor in Erhlei. Although each processor would like a larger share of the business, competition is on the basis of establishing good relations with sellers (farmers) rather than on service or price. One processor is named Liao and had the major share of business in the past. The other is named Chiu.

The Chiu family has produced a large crop of daughters in recent years who have married into Liao families and Chiu has subsequently been getting a larger share of business recently from ch'in ch'i (affinal relatives). Both processors have kinship relationships with many tea farmers, their own customers and their competitor's customers as well. Although kinship identities are only one aspect of the relationship (other aspects include such as sworn brothers, mutual friends, etc.), it is possible to approximately assess the relative strength of various kinship categories. That is, a man seldom will sell to another processor if his father, brother, father's brother, or mother's brother is a processor. However, he usually sells to his wife's father or wife's brother rather than a more distant kinsman on his own side of the family, i.e., a first or second cousin. As Chiu girls marry Liao boys, there is usually no immediate change, but as time passes so that a new generation takes over management of farm and processing from the old generation, some Chiu girls bring their Liao husband's tea production into the Chiu processing business.

Both processors periodically entertain the farmers with whom they do most of their business. The tea farmers are divided into two groups, so to speak, each focusing on the respective processor to whom they sell most of their tea leaves.

Young Men

As will be discussed in the life history section, there is a period almost of limbo for young men between primary school graduation and their military service. At some point which is not clearly delineated a boy becomes a man and earns a man's wage rather than a boy's wage. Boys who enroll for an apprenticeship or who continue in school tend to drop out but those remaining in the village constitute a social group.

The main activities of the group are in the evening and consist of conversation, music, wandering around, telling jokes, talking about girls, and the occasional trip to tea houses which are cheaper than coffee or wine houses. Such places usually have girls who are not prostitutes but who will talk very suggestively, entertain, and occasionally pet.

These young men's groups are age graded, usually a spread of not more than two or three years. They sometimes become a sworn brother's association and at that time, the student and apprentice in the appropriate age group will usually be invited to join.

Young Women

In general, there is no equivalent for girls of the young men's groups described above. Girls who graduate from primary school stay and help at home until marriage and are watched much more carefully than boys. The major

exception involves girls who are hired by factories, particularly clothing factories. There is one small factory close enough to commute by bicycle daily and two factories which pick up the girls on a truck in the morning and return them each night. Although it is expected that each girl will turn over her money to the family, she is economically independent and usually has pocket money of her own. On Sunday, a non-work day, these girls travel in a group to the park, the theater, etc. Girls who work in the same place play together. Since there are three factories, there are three such groups, each related to a factory and cutting across village lines although seldom do groups include anyone living outside Talei Li.

I Ching (Voluntary Policemen)

The modern I Ching organization (voluntary policemen) was started for men in good health between the ages of 30 and 45 two to three years after the Restoration by the regular police organization. Men are available anytime for service but tend to be most active for the fifty days immediately preceding the lunar New Year. An old Chinese custom requires that all debts should be paid by New Year's day and the pressure to liquidate debts leads to an increase in the frequency of robbery although robbery is a fairly common crime on Taiwan in general. During the period of fifty days before New Year, the I Ching mount a night patrol in Talei Li.

Each member is furnished a rain coat, flash light,

night stick, and piece of rope. The patrol for Talei Li usually consists of five men nightly; two men patrol the first half of the night and two others, the last while one man is on duty as a spare in case someone gets sick. He also prepares tea and noodles for snacks. Although only adult males are regular members of the I Ching, the patrol is considered part of each household's responsibility. Therefore, the fifth or spare man is often not a regular member and indeed, may often be a girl representing a household which has no adult males within the appropriate age group. A girl never patrols but she does fix the tea and noodles. In this manner, a girl is seen as almost the equivalent of a male, for although she does not patrol, her activities (all night rather than half the night) mean her household has made a contribution equal to that of one furnishing a man.

Control of crimes is easy to maintain because there is only one road leading through the li towards town and escape over the mountains would be extremely difficult.

Clothes and equipment for the I Ching are purchased from funds contributed by business men and wealthier land owners in the area. Although donations are supposedly voluntary, community pressure is placed on anyone who does not willingly donate his share, i.e., there is a veiled threat that no watch will be kept on property owned by uncooperative men. Each night of work, each

participant receives $4.00 to purchase noodles. As stated previously, sworn brothers associations sometimes mount the patrol in other periods on their own initiative as a community service without any contributions.

Once a month, the I Ching go to the police station in Pouti for training conducted by the policeman assigned to the li with the help of other officers in the station. Occasionally, a high ranking officer from Hsin Tien comes in to give a pep talk. The efficiency of the force and the degree of assistance obtained is purely dependent on the kind of relationship the policeman is able to establish with villagers. Although considerable force and power is his by virtue of his office, villagers can make his job relatively easy or very difficult. The previous policeman had been stationed in Sanlei for many years and had excellent relations with villagers. Most police are Mainlanders, one of whom was assigned shortly after our study began. Since he only spoke a few words of Taiwanese and those with an accent, he was having a difficult time. Many villagers speak no Mandarin and several that know some Manderin refuse to speak it.

If a thief is captured, the I Ching on duty get a reward of $120.00 each (more than two days regular pay) and the policeman in charge of the li gets a citation of merit. One third of the reward comes from the donations, one third from the police station in Hsin Tien, and one third from the main police station in

Taipei along with a letter commendation. Additionally, the I Ching and pliceman have their pictures taken together at the station in Pouti and are presented copies later at the village temple by the local police chief. This custom helps to break down the natural antagonisms between police and villager by instilling the idea they are united in a task to prevent robbery and catch thieves.

There was a similar organization under the Japanese but at that time the volunteers had more training, a regular uniform, and discipline was more harsh. According to informants, a Japanese policeman always beat ransgressors on the spot in public, but this never seems to happen with Chinese policemen although there were rumors of beatings at the police stations. The policeman now uses persuasion, attempts mediation, or relies on the courts.

If the I Ching capture a thief, they are instructed to send for the policemen in Pouti. A Mainlander was caught some years ago, arrested and as far as villagers were able to learn, was quickly released by the police who were fellow Mainlanders. Therefore, before the police arrive all captured thieves are thoroughly beaten with sticks but are not killed and even villagers not on duty are all awakened to contribute blows. Since every man in the village and perhaps several from nearby villages participate, it would be difficult to prosecute them all.

The whole li contributes men to make up the patrol

and it thus is a unifying force since there are presently 55 members, 18 of them from Sanlei. As stated, Sanlei often mounts its own patrol in periods when the li patrol is not active. The fact that Sanlei is the only li village that mounts this extra patrol supports my contention that Sanlei is more integrated.

Corvee

There has been a tradition in China of using local labor for civic works, road repair, bridge construction, public building maintenance, etc. Local villagers are assessed so many days of service per year. The system of corvee was continued under the Japanese but was quite harsh for every adult male had to contribute a heavy amount of labor every year. The work might be performed locally, but some men were conscripted into work groups and taken from the village for two-week periods, usually to dig ditches or work on road maintenance. During World War II, several village men were conscripted into Japanese labor battalions. One village man worked at the American prisoner of war camp near Taipei. Several li men were taken to other islands under Japanese control; two went to the Philippines and were returned by the Americans after the end of the war. Their earnings were in Japanese Yen and are still on deposit in a Japanese bank and will not be returned until after treaty negotiations between the Republic of China and Japan are

concluded although the enormous post-war decrease in the value of the Yen has made the savings minuscule.

The system of corvee labor has continued under the Chinese Nationalists but is now considered to be much more equitable. Labor is still required but the load is light and accomplished only in the immediate area of Talei Li. Moreover, it is possible to buy your way out of the required labor. Since $10.00 is recognized as the equal of a full day's corvee labor while $50.00 constitutes a normal day's wages, the work can be seen to be considered very light. The rich tea owner and processor previously discussed does no corvee work but his $10.00 contributions are used for the material which might be required such as nails.

Nevertheless, it is desired that everyone possible work on corvee projects. Most villagers respond to the appeals which are made to civic pride and do participate. The work projects are treated almost as a game for no man works very hard. Since a villager accumulates a day's corvee labor credit for working on any project either for a day or until it is completed whichever is less, most projects are overloaded with workers and each man contributes little labor. For example, a foot bridge was built across the creek when the water was quite high from the winter floods. The Li Chang (mayor) and I estimated that the bridge could have been completed in a single day by three or four men. However, twenty-six village men worked

on the bridge and each achieved credit for a day's corvee work. They often got in each other's way, i.e., I watched four men struggling to carry a single bamboo pole which one man could have carried in one hand without much effort.

There is a latent effect which may be evident to village leaders and political officials. Men are able to do "good" for the community without strain and since the work is always confined to their own area, they can see the completed job regularly. Although no one person's contribution to each job amounts to very much, the completed project is useful and worthwhile. For example, the bridge described above saved up to half a mile walk to the next closest foot bridge. Men work together cooperatively in a large group, the only large work groups ever seen in the village. Finally, because of the great excess of men over what is reasonably needed for a job, there is much time for joking and friendly conversation. Although only men do corvee labor, women always gather to watch and pass remarks so that in essence, every corvee job we observed in the village was a gay occasion.

CHAPTER VII

RELIGION

The significance of religion in Chinese social life has often been undervalued in the conventional analyses. In one of the first assignments in my formal university study of China, a noted sinologist had written:

> The Chinese have been less concerned with the world of the supernatural than with the worlds of nature and of man. They are not a people for whom religious ideas and activities constitute an all-important and absorbing part of life . . . (Bodde, 1951:18).

Reischauer and Fairbank, in a classic work (1960:30), add that Confucianism was a "great ethical institution, which in a sense occupied in China much of the place filled by both law and religion in the West . . ." A similar thread of the insignificance of religion is woven throughout the accounts of Western scholars and is even more strongly a part of the literature of modern Chinese intellectuals (C. K. Yang, 1961:4).

The attitudes towards religion and the observances of religious rites and rituals found in Sanlei Ts'un would not support the above positions. I do not believe that Sanlei Ts'un is unique in its strong emphasis on religion as compared with other Chinese villages, i.e., I believe

most Chinese villages have a strong emphasis on religion. I discuss below four primary reasons for this discrepancy between published accounts of its non-importance and the actual practice.

The first reason is identical to one contributing to the errors in interpretation of the role of women, the problem focus of this dissertation. In accordance with the concepts of Redfield (1956), every civilization has a "Great Tradition" found predominantly among the educated elite which is contrasted with a "Little Tradition" or series of "Little Traditions" found among the masses. The relationships between the two levels are problematical although almost all of the classical literature and historical records in China are devoted to the bearers of the "Great Tradition." In other terms, this has been succinctly stated by Reischauer and Fairbank:

> The common people who formed the mass of Chinese society did not bulk large in the cultural record, which has come down to us chiefly from the brushes of scholar-officials. Most Chinese were neither scholars nor Confucian gentlemen, and had very little, if anything, to do with officialdom. For the common people, Taoism and Buddhism still supplied the principle explanations of the cosmos and the family and village still were the focus of everyday living. But it is not yet possible to reconstruct with verisimilitude the daily life of the average Chinese villager in the pre-modern centuries. What we know most about is the educated, urban upper classes . . . (1960:383).

In respect to the practice of religion, it appears there is a significant difference between the elite and the masses. At least, even on Taiwan today, great differences

can be found between the religion of the masses, particularly in rural areas, and that of college-educated urban dwellers.

A second reason is due to a great difference in the structure of the typical Western as opposed to Chinese religion. C. K. Yang has discussed this difference on a structural-functional basis as the differences between "institutionalized" and "diffused" religion:

> In institutional religion, the theology, the organization of personnel, and the cultic symbols and practices are separate from the secular social institutions, thus making religion an independent social institution. In diffused religion, these factors have no separate institutional existence but are diffused into the concept and structure of several different institutions. In Nanching and in Chinese society as a whole, diffused religion represented the structurally stronger and more pervasive force in the lives of the common people (1965:192-3).

Western religion tends to be highly institutionalized as opposed to the strongly diffused Chinese pattern. An institutionalized religion is much more obvious to the cross-cultural observer. It will be demonstrated that religion in Sanlei Ts'un is diffused into many different aspects of social life as has been described in most ethnographic accounts of Chinese villages.

The third reason, also related to the difficulty of the Westerner in understanding Chinese religion and appraising its role in society, is due to the eclectic nature of religion in China. Eclecticism refers to the fact that Chinese religion is made up of elements from many

different sources including both Great and Little Traditions and also, that the Chinese are non-exclusive with reference to a commitment to a particular religion. It is not only possible to believe in two conflicting ideologies, it may well be prudent as I shall illustrate.[1] When exposed to a new religion, an individual may ask two central questions: (1) Is it the one true religion? (2) Should I become a believer? Man can never be certain of the answer to the first question but he does have control over his actions relating to the second. If the answer to the first question is no (the new religion is false), then the answer to the second is irrelevant (believing or not believing). However, if the answer to the first question is true (the new religion is the one true religion), then the answer to the second is crucial: a man can be a believer in the one true religion and be rewarded; or he can be a non-believer in the one true religion and be punished. Therefore since man has control over only one of the two questions, it is prudent to answer it in only one profitable way--be a believer.[2]

The above rational process could be applied to a series of individual beliefs or constellation of beliefs and in each case the outcome would be the same: become a believer. On several occasions, villagers asked how to be a Christian or perform Christian ritual. They had heard of Christianity and would like to add it to their belief

systems.

If a man were to apply the above approach to a series of beliefs, he would be required to accept and internalize some beliefs which are in direct conflict with others. This does not seem to present the problems it might require of a man socialized in terms of Western culture. That is, there does not seem to be the same strong drive for belief consistency, i.e., construction of what has been termed an integrated personality. Francis L. K. Hsu (1953; 1963) has characterized the Chinese personality as "situation-centered" by which he means that a Chinese reacts to his world as if it were compartmentalized; he possesses a segmented personality. "Principles which are correct for one set of circumstances may not be appropriate for another at all, but the principles in each case are equally honorable. In fact, the good Chinese tends to have multiple standards" (1963:2). "The individual feels no resentment against conforming and no compunction about behaving differently under contrasting sets of circumstances" (1963:2). This great difference in approach has seemingly confused Western scholars.

A man who repeatedly offers one opinion, then changes it to the opposite side and then again reverts to the original position is labeled "insincere" according to Western principles. Liao P'o-li, the forty-two year old son of the man who headed the largest extended family in

Sanlei, told me on many different occasions that he did not believe in ghosts or evil spirits. Nevertheless, I saw him make sacrifices of propitiation to ghosts and evil spirits and after an accidental death in Erhlei, he refused to come alone to my house to chat as long as he had to pass the body which was laid out in the courtyard. He said he was afraid of the evil spirits which were sure to be lurking near the body. When I argued that he claimed he did not believe in spirits and ghosts, he told me not to be foolish and he would not come until the body was buried. Liao P'o-li was a sincere man who did not believe in spirits in one set of circumstances but did believe in spirits in another. He will continue to oscillate between these positions as situations change. I believe the Western scholar is incorrect if he labels China irreligious on the basis of this process. Even though an informant may tell him, "We do not really believe these religious things," the researcher should observe his activities and apply a behavioral yardstick to accurately assess the informant's attitudes.

The fourth and final reason is due to a Western distinction between religion on the one hand and magic or superstition on the other. Gallin points out (1966:232) there is "so complete a mixture of religious and magical belief [in the village he studied] that it is often difficult to determine where one form ends and another begins"

but such an objective approach has not always been realized. Many of the earliest Western studies were by Christian missionaries, a group not likely to be unbiased with regard to reports on religion. In one of the best known nineteenth century rural studies, Arthur Smith (1899:343) argued that the Chinese neglected the spiritual nature. Modern sinologists treat magic and religion as a single loose system (Gallin, 1966:232) or a complex of attitudes and beliefs (Kulp, 1952:284). The former separation of magic from religion and then labeling most items as magic and thereby superstition is not reasonable as a basis for declaring that religion is not important in China. C. K. Yang claims that because of the large numbers of magical practices and beliefs to be found in the study of Chinese religion which carry no ethical connotations:

> . . . The Chinese people were generally regarded as a superstitious lot who had yet to experience an ethico-religious life of a higher order. This view was most familiar to the Western world, as it was popularized for over a century by Western missionaries who found this situation to be wholly incompatible with the Christian faith and took it as the most convincing justification for their evangelical zeal (1961:3).

In this chapter, I will demonstrate that religion is very important in Sanlei village. There are few households in the village in which a religious act is not performed at least twice each day. Religion is used to bolster the family and the larger kinship organizations. Religious observances legitimize and mark key steps in the

life cycle. Religion supports the previously described sworn brothers and god's associations. The village temple and major religious events also support relationships with other communities. Finally, religious beliefs affect many aspects of daily life.

The Main Village Temple

The most important building in Sanlei Ts'un is the village temple which is ornate and well-maintained inside and out, the largest, cleanest, and most imposing structure in the village. This building is the social center of the village for in addition to its religious functions, it is a meeting hall, a recreation center, a study center for children, and the focal point for visitors and much community pride is derived from the prestige associated with the temple. The temple is important for the performance of religious rites but not as important as the home, at least on a quantitative basis, although the temple is considered to rank higher in the religious hierarchy than the home as a worship center. Temples are also rated hierarchically and in local opinion, the one in Erhlei is ranked higher than the one in Sanlei while both rank below a major temple in Hsin Tien. The temple is usually a significant part of the major calendrical religious rites as well as many of the periodic (non-calendrical) community religious events. On a personal level, many individuals consult the temple gods as needed while other individuals may worship daily,

some in observance of a promise made to the gods for fulfilling some previous request.

On the interior wall of the temple is a bulletin board topped by an engraved history of the temple and list of donations for its construction. A report of collections and expenditures for the preceding religious event is posted in descending order by amount of donation per household. In this manner, the gods are advised of contributions and every resident and visitor to the community may learn who is important in the village, i.e., the larger the donation, the higher the status.

There are two regular means to question the gods. One method involves use of the shen pei which look rather like they were made from a short blunt banana sliced in two lengthwise. After asking a question accompanied by appropriate ritual, the shen pei are dropped on the floor from chest level. There are two falls interpreted as yes and two as no, thus yielding a fifty per cent success probability. The second method of questioning gods involves randomly selecting a fortune stick from a vase. Matching the stick is a fortune on a set of tablets but all fortunes are rather ambiguous and subject to conflicting interpretations.

There is no regular priest attached to the temple nor is it on a route of a visiting circuit of priests for the temple is a religious center complete unto itself.

There is no permanent individual in charge of the temple which belongs to the entire community. Each particular festival has a lu chu (pot master) in charge and a committee of assistant pot masters, one from each of the six village lin, all chosen by the gods through casting the shen pei. Whoever obtains the most "yes" answers before his first "no" is considered to have been selected by the gods for the position. The last part of any yearly event requires casting the shen pei to determine the next year's committee. Since there are two major regular events each year plus periodic special affairs, each requiring a unique committee of seven, many villagers are involved in temple committees at any particular moment in time.

Women have never been the pot master but they have regularly been assistant pot masters. Gallin claims this is an unusual role for women in the Chang-hua area in which he worked (personal communication). Sanlei villagers believe it is natural because the pot masters and assistant pot masters are said to be selected solely by the gods. Eligible candidates who cast the shen pei include all village chia chang (household heads) and since the chia chang are usually males, the unusualness may be deceiving. That is, female lu chu may be rare only because female chia chang are relatively rare and not because there is some normative bias against female lu chu. As previously stated, female chia chang are more numerous in Sanlei than

i
w
a
f
a
T
c
c
c

t
i
a
s
c
t
c
r
w
y
m
t

T

a
h

in many other areas of Taiwan. The only other office to which females are elected in Sanlei is the parent teacher's association although as chia chang, females are eligible for any political office. (Women from some other li around Hsin Tien are elected to the township council.) This explanation of the relationship between the percentage of female lu chu and the percentage of female chia chang cannot be tested without further data from other regions of Taiwan.

The only semi-permanent temple official is the caretaker who tends the temple, keeps it clean, puts flowers in the vases, chases out children when they are too noisy, and watches for thieves. He receives the income from a small piece of temple-owned land but since it is not adequate to pay for a regular worker's services, the caretaker's job is always filled by one of the semi-retired old men who has extra leisure time. The current caretaker replaced the former caretaker two years ago because his wife had died rendering him ritually unclean for three years. People who are ritually unclean, i.e., those in mourning or women who are menstruating, should not enter the temple lest they contaminate the gods.

Temple Gods

There are many different shen (gods) who are all arranged in a great pantheon not unlike an emperor with his officials descending down to the level of the local

policemen. The originations of gods are diverse, some were pure spirits and some were real historical figures who have been deified. As stated by Gamble for North China and true for all China, "Buddhism, Taoism, Official, and individual cults have influenced each other, borrowed from each other, and imitated each other" (1963:400). Certain gods are associated with certain purposes, i.e., they have functional specificity. However, across China as a whole there is a great deal of regional variability. "Even for certain national cults, the names and at times the functions of the same god vary from place to place" (C. K. Yang, 1961:10-11).

There are 30 god's statues in the Sanlei temple. The names of all but two[3] are known by some villagers but only a few villagers could name the 28. On the average, men know more names than women and old people know more than the young. For some of the popular gods, everyone in the village knew the name, even small children. Associated with each known god is a story. The oldest temple god was brought to the village from Fukien with the original group of migrants while others have been installed periodically; some have been acquired out of surplus funds collected for a general festival; some have been donated by sworn brothers associations; and some have been donated by individuals. During our study, a part-time miner was visited by a god in a dream who informed him not to go to work in the mine

anymore. The next day, there was a cave-in which killed a miner from Erhlei Ts'un. The part-time miner was sure the god had saved him so he obtained a statue of the god, installed it in the temple, and pledged to worship it daily for the rest of his life. Although the history of the acquisition of many statues is known, much has been lost and as stated earlier, two of the statutes are completely unknown, even their names.

The statues in the temple are called gods because they are more than a mere symbolic representation, they actually possess some essence of the god himself, acquired by being made by special craftsmen and by being placed with appropriate rituals next to other gods in special temples for a period of time. Temple gods may become contaminated by various means such as by the close approach of a person in mourning or a menstruating woman. When contaminated, they lose much of their power but there are appropriate rituals to cleanse them.

Gods are both males and females and probably the most popular single god in China is Kuan-yin, the so called Goddess of Mercy (L. Thompson, 1969:56). In Taiwan and Fukien, one of the most popular gods is Matsu, another female, around whom a major celebration is dedicated each year in Sanlei. The importance of females in the pantheon of gods is consistent with the arguments presented in this paper with regard to the role of women in Chinese society.

I have argued that females are not as inferior to men as claimed in much of the traditional literature (see Chapter X). On the spiritual plane, which as mentioned partially mirrors the structure of Imperial China's political organization, female gods hold commanding positions and rank above a great many male gods.

Temple Events

Each year, there are two major religious events celebrated in the temple, the Matsu procession and Lunar New Year (see Chapter IX). In many years there is also an additional major special event, i.e., not regular periodic. There have been three extra events in the past five years such as the "Fire Purification Ceremony" (discussed in the latter part of this chapter). There is nearly 100% participation in major events, each of which usually lasts more than one day and features elaborate hired entertainment, hired religious specialists, dinner and entertainment parties, food and money sacrifices at the temple and at home, and individual and kinship unit worship.

There are seven or eight minor religious events during each year (see Chapter IX) which are celebrated in a manner not unlike the above major events but much less elaborately. The extent of participation is less and sacrifices are smaller. We collected lists of affairs in which each family participated by household and in only

rare cases did any two lists exactly match. The number of items on a single list were closely related to the socio-economic status of the household, i.e., the richer the household, the longer the list, undoubtedly due to the fact celebrations are always an expense. Rarely is a religious specialist hired and rarely is entertainment provided for minor events but if entertainment is hired, it is much less expensive than that for a major event, a puppet show rather than an opera for example.

A yet smaller percentage of the population use the temple for the regular bi-monthly special sacrifices (first and fifteenth or second and sixteenth of the lunar calendar).

The temple is rarely empty at any period from its opening just before sunrise until its closing at bedtime. In the past, the temple was open all the time, but villagers claim it is now necessary to lock it at night because of the many thieves, particularly wandering retired Mainlander soldiers. On a typical non-special day, about 20 people, more than half of whom are women, perform some religious act in the temple such as an offering of incense. These acts are for three major purposes: thanking the gods for a past action, begging for a future favor, or merely asking advice. The most frequent underlying cause is health and second, is economics.

Earth God Temple

According to C. K. Yang, T'u Ti Kung (God of Earth) is a universal cult found in all Chinese villages and towns and having special importance for local neighborhoods (1961:98). Almost every small community in Taiwan has a small shrine dedicated to T'u Ti Kung and a few larger communities have large and elaborate shrines. Sanlei's shrine is near the village border next to Erhlei, not a convenient location but one which has powerful feng shui coordinates. The brick temple is very small, about four feet square and three feet high with a peaked roof. Inside is T'u Ti Kung's statue and a stone incense pot.

It is necessary to digress for a moment to discuss religious attitudes. Spiritual beings include gods (shen) which are good divine powers, beings who bless those who worship them; and spirits or devils (kuei) which are malevolent divine powers, beings who either bring harm or remain neutral, i.e., withhold bestowal of blessings. Ancestors may be considered spirits until they demonstrate benevolence and if they are appropriately revered, ancestors will not cause harm. However, the status of any supernatural being is subject to change, gods may become spirits and vice versa (Thelen and Li, 1963:44). The whole pantheon of gods and spirits, as previously stated, is organized much like the traditional government of Imperial China. Although there is great regional variation in details

there are hundreds of gods arranged hierarchically so that important gods have both attendants and troops. A villager approaches the gods much as he does ordinary governmental officials, i.e., gods and officials alike can be bribed, coaxed, tricked, etc., for gods are neither omniscient nor omnipresent.

T'u Ti Kung is the god in charge of the local community and thus, ranks low in the hierarchy. Villagers describe his status as somewhat similar to the local policeman. He keeps track of local events: births, deaths, farm production, business enterprises, marriages, etc., and has the power to influence the acquisition of wealth. Therefore, supplications are made to him by farmers before planting and thanks are given to him after harvesting. Some of the regular periodic religious events require worship at the T'u Ti Kung temple as well as the main temple and one event is devoted to his temple and the home. Some households make sacrifices at the Earth God temple as a regular part of their bi-monthly worship (1st and 15th or 2nd and 16th). About seven or eight times each month (estimated) individual villagers perform unscheduled worship activities for personal reasons at the T'u Ti Kung temple.

The usual form of worship is to face the altar, light three incense sticks, bow the head, hold the sticks between the two closed hands palms touching at chest level,

pai pai[4] three times, and then insert the sticks in the incense pot.[5] Then the whole ritual is repeated while facing away from the temple to invite any passing gods to come in and be worshipped except that the incense sticks are stuck in the ground about twenty feet from the shrine door. Worship at the main temple is nearly identical with the exception that three sticks may be placed in the pot in front of each of the three altars and the final outside worship is in the doorway with the sticks placed in the pot hanging on the wall outside. The twenty-foot distance at the T'u Ti Kung temple illustrates the general attitude towards gods for the sticks are stuck in the ground so far away from the earth god temple in order to make T'u Ti Kung think his temple is as large as the main Temple. If food and wine sacrifices are part of the worship, they are placed in front of the altar before the pai pai and are left long enough for the god or gods to eat as much as desired. All left-overs are returned home for family consumption, another indication of a rational and reasonable approach to religion. Statements to the gods are usually spoken but in a low voice. It is possible to stand close and hear the conversation but some statements are quite private and would embarrass the worshippers to have them overheard.

Legend states, according to most villagers, that T'u Ti Kung has a wife, T'u Ti Po. He had wanted to make

everyone prosperous but she argued that then there would be no one left to carry her sedan chair. She won the argument and many people therefore remain poor and consequently, villagers refuse to worship her. They all agree that most women do have a similar ability to influence their husband's behavior.

Miscellaneous Holy Places

Some years ago, a set of human bones was found under the bridge at the border of Erhlei and Sanlei. A general collection was made and the bones were interred on the site in a small shrine where people worship periodically as needed, especially women who have sick children. The attitude seems to be that the spirit causes trouble such as sickness unless periodically propitiated.

In back of Liao Kan-yi's house (head of the major temple committee and owner of the oldest village store) is a special holy rock installed by his grandfather. No one remembers the reason for worshipping the rock, but on the first and fifteenth of each month, his family worships it with food sacrifices and three incense sticks. A younger grandson is often delegated the task. There are several trees and other rocks at which special worship is made. For example, some years ago a boy fell on a rock and was in a coma for several days. His mother worshipped at the rock on which he fell and promised that if her son got well

she would worship there twice each month the rest of her life and since he recovered, she has continued now for about 25 years.

The final set of holy places are the various tombs for as previously stated, the Sanlei area has many excellent burial sites. One elaborate tomb recently was constructed at a cost of over $200,000.00 ($5,000.00 U.S.). Villagers usually avoid outsider's tombs, but tombs of their own ancestors receive periodic attention. There is special worship on regular days throughout the year and the individual worship as necessary. The tomb location is considered significant for family propserity.

The Home Worship Center or Kung T'ing

The *kung t'ing*, which is the central room in every house or compound, is a ritual center but serves multiple uses in addition as a main workroom, storage place, living-dining room, etc. (Gallin, 1966:239-40). When a household divides, there is usually a continued sharing of the *kung t'ing*. The appointments are similar throughout the village (see Figure 4). On the wall across from the main door is the ancestral table (one foot deep, five feet long, and four feet high) which holds wine cups in sets of three, ancestral tablets if any, death memorial boards, perhaps some god's statues and incense pots. A few tables have only one pot but most have two or more, one of which will

usually be a god's pot. Extra pots are usually those with separate surnames for worship of ancestors other than the ones associated with the head of the household (see later section).

Directly in front of the ancestral table is the table of Eight Immortals (four feet square) with a bench on each side so that it can comfortably seat eight. On it are placed the food sacrifices to the gods and/or ancestors although it should be carried outside the door to hold sacrifices for negative spirits who, after all, should not be invited into the house. Because it often rains and since most people do not want to bother, it is usually placed just inside the door. It is pulled out for dining at parties or for children to do homework.

On the wall behind the ancestral table are usually some scrolls, god's pictures, and perhaps the picture of a dead ancestor. On the sidewalls are advertisements, calendars, and pictures of living older members of the household.

In almost all village households, each morning and each evening of every day someone worships in front of the ancestral table with incense; usually the worshipper is a male but it is permissable for a female to substitute. On either the first and fifteenth or second and sixteenth of each month, special rich foods are used for the evening worship and consumed afterwards. On the regular periodic

or special religious occasions, food sacrifices will vary in elaborateness according to the importance of the event. Paper money is often burned in a metal pot on the kung t'ing floor for the benefit of both gods and ancestors. Life crises events such as birth, death if not accidental, engagements, and weddings are all solemnized in the kung t'ing.

One should not believe however, that the kung t'ing is a cherished and sacred room which is always approached with reverence. It is a common room, second only to the kitchen in frequency of use. Bicycles and other valuable goods are kept in the room while pickled radishes and home-made soy sauce may be stored in crocks under the ancestral table. Children often play in the room and the ever-present chickens wander in and out leaving droppings. Since the room is frequently owned jointly by more than one household, no one person truly feels it is his responsibility to keep it clean.

In one sense, the room furnishes a clue to the general approach to religion found in the village; it is elaborate but not well-maintained. One performs all the proper rituals but one is skeptical about their efficacy. Everyone half-believes and half does not believe in ancestors, magic, and religion. Older people are more interested in religion than younger people and women are more interested than men although there is considerable variability related to personality in both instances.

Hsiang Lu (Censer) versus Shen Wei (Ancestor Tablet)

Although ancestral tablets are common throughout China, they are relatively rare in Sanlei Ts'un as a direct result of the Japanese occupation. Many tablets were destroyed along with the houses when pacifying the bandits and others were individually destroyed later in a deliberate Japanization process as part of an attempt to destroy any continued roots to Mainland China. The lack of tablets has had little effect on ancestor worship for Sanlei data suggest the hsiang lu (ancestral incense pot) may be more important for ancestor worship than the ancestor tablets.

On this point, the literature is somewhat vague. Although the ancestor cult and rituals have been described many times, the concentration has usually been on the shen wei (ancestor or soul tablets) rather than the hsiang lu. Many accounts of ancestral worship specifically note that there are no shen wei, but conversely, no account seems to note the absence of the hsiang lu although some do not mention it in the description of a worship activity. Gallin emphasizes the presence of the god's statues and ancestral tablets in the kung t'ing (1966:239). He also lists the incense receptacles in a list of other items (op. cit.) but in another section (1966:220) claims that one of the three ancestral spirits lives in the incense pot in the ancestral-worship room[6] which suggests the censer is necessary. Martin Yang's description of ancestral worship in Shantung

includes an incense pot but no ancestral tablets (1945:93). Instead there is a general scroll on the wall to represent the ancestors. Hu (1948:32) notes that many people had no tablets, merely writing ancestor's names on pieces of paper and burning them in worship. Freedman remarks on the frequent absence of tablets in Hong Kong households (1958:83). In a general religious account, C. K. Yang (1961:39) also emphasizes the importance of tablets but claims that the simplest form of worship to ancestors might consist of the daily burning of incense to a symbol of the spirit "which was usually a wooden tablet or a portrait." Hsu states that every house in West Town has a household shrine (1967: 50) and that in every shrine there are two incense burners, one for ancestors and one for gods (1967:184). However, he also states that not every house has tablets; often there is only a large scroll (1967:184). Lang, too, discovered in a survey that worship of ancestors was performed by burning incense before either a tablet or a photograph (1946:162). She also cites an example of a retired official who worshipped ancestors after merely writing their names on a piece of paper (1946:163). Since these authors have not generally considered the direct significance of ancestral tablets versus the censer, the question can not be definitively answered at this time.

My own data on the above point, both from Sanlei Ts'un and the City of Taipei,[7] reveals that the censers

but not the tablets are vital. That is, I viewed many shrines that did not have tablets, but every shrine had at least one censer and often had two or more. In place of the tablets, there may be nothing but quite often, there was the shou scroll which features 100 classical variations of the character shou (long life) or alternatively, a scroll with one large shou character in red.

In Sanlei, most shrines have at least two censers: one for gods and the other for ancestors. Each ancestral censer has a name, the family surname. Ancestral censers always have handles which villagers call erh tsu which means ears although alternative definitions of the word (Mathews, 1963:245-6) include ear, handle, and grandson of a great-great-grandson, certainly representing a long line of descendants. The censer contains the residue (ash) of burning incense sticks. It can be cleaned only on regular occasions with due reverence and is never fully emptied. It is believed thereby that the ash extends back to the first worship of the founder of the line. When a new worship center is established after a family division, the new censer will be endowed with some ash from the old censer (transferred from house to house in a red envelope) so that each censer maintains continuity with the past. If tablets are destroyed, new ones can be made. If the ash is lost--it is lost forever and misfortune is certain unless some can be obtained from the worship center of a cadet branch

of the family.

The censer also possesses a quantity of spiritual essence, i.e., it is a repository of part of the ancestor's souls. Therefore, it can not be touched by an outsider and in parts of Taiwan, may be hidden from view (Thelin and Li, 1963). In Sanlei, if there are two censers with different surnames in a single shrine they will be separated by a barrier so they can not "see" each other. Villagers universally claim that ancestors with different surnames fight.

In the discussion of compounds in Chapter V, I pointed out that many households had more than one censer. Moreover, some censers do not belong, i.e., according to the Great Tradition, the only pots in a household should be those of patrilineal ancestors of the head of the household. Sometimes, as noted, a wife brings her family ancestral pot and in at least one case, no living member of a household knows where a particular censer came from.

Once more, because of the lack of specific information in the literature, it is impossible to ascertain if Sanlei is normal or deviant as compared with other Chinese villages in this regard. The closest comparison derives from a paper delivered by Professor Robert Smith at an Alpha Kappa Delta meeting at Michigan State University. Professor Smith noted that ancestral shrines in Japan

(which in many respects are similar to Chinese shrines) are only supposed to contain patrilineal ancestors of the household head. However, in spite of the fact the heads of households he surveyed claimed that only proper tablets were in their shrines, Smith discovered (by physically examining the actual tablets) many tablets which did not belong, i.e., affinal relatives. A similar kind of actual check of tablets and censers in Taiwan might provide similar kinds of results, i.e., deviance from the Great Tradition in the direction suggested by the Sanlei data.

Professor Smith's report also supports the argument I advanced in Chapter I, i.e., the Great Tradition strongly influences anthropologists and indigenous members of the society as well. As far as I know (my familiarity with the Japanese sources is limited), Smith's account was the first to note that many ancestral tablets were "falsely" located in various shrines. His discovery was easily accomplished by merely going around and counting tablets, but it was not easily accomplished in the sense that a belief which he previously had internalized had to be questioned and overcome (see Chapter I and Chapter X).

Worship Units

The significant worship unit is the individual but he often acts as a representative of a family for family units rarely perform a religious act collectively. Instead,

one individual performs the act while others observe. There are only two kinds of occasions I observed during the study when there are joint performances: a teaching situation with an older individual and a child performing the same rite; or when hired priests collectively participate in a ceremony such as a funeral. Most worship is by an individual representing his family, nuclear up to extended or compound, and often including deceased members.

For 64 of the 66 Sanlei households, one representative, usually the oldest male in the household, worships in the kung t'ing each morning and evening with incense. There is no ritual gathering to observe the worship. Where more than one household share ownership of the kung t'ing, i.e., in a compound, only one representative for the compound is necessary and usual. On the first and fifteenth or second and sixteenth of each lunar month, worship offerings include special rich food such as many meat and fish dishes and the family usually does gather to observe the worship in 59 of the 66 households.

On the community level, there is worship for the various special holidays, but each household's sacrifice is offered separately and returned to be consumed separately. There are often parties with guests present on special days but even then the food is kept separate in each household. Only in some compounds with a joint kung

t'ing is food comingled and even there, the practice is relatively rare. I attended one big dinner in a compound kung t'ing of two families. There were two tables with identical menues although food for each was prepared in separate kitchens. I ate part of the meal at each table, oldest brother's first. It was a single party with much joking and drinking games and although wine and cigarettes were passed between tables, the food remained distinct. To have many guests is desirable so that frequently at large affairs, the host is out on the street bringing in guests and he never does sit and eat. Since meals are usually served in courses, one dish at a time, it is possible for a guest to only stay long enough for one or two courses, and thus, be able to visit many different homes in a single evening.

Beyond the community, only the li and li temple are important in religious activities. The li consists of five villages which have historically cooperated in maintenance of a single temple. On some occasions, sacrifices are brought to the li temple rather than the Sanlei temple but if the li is involved, usually to both. Hired priests and/or entertainment may be at the li temple as well as the village.

There is very little joint worship beyond the li and although some holidays are national, Talei Li does not cooperate with others in celebration. The only unit larger

than the li in which there is cooperation for religion is the territory around Hsin Tien at the time of the Matsu festival. Matsu is one of the most important dieties on Taiwan and some scholars feel she is almost a focus of a separate cult. During the celebration dedicated to Matsu, her statue, together with other god's statues, are carried on sedan chairs in a procession to each village near Hsin Tien. Each village contributes money for the cost of the dragon dance team and sword dance team which accompanies the procession and also provides young men to carry the chairs. It is a gay occasion, especially since the li also provides its own additional ceremonies and entertainment during the same day and one or two days which follow.

Formal Religion

As far as the other formal religions are concerned, the village has a mixture of Confucianism,[8] Buddhism, Taoism, Official and local folk religions. These are so intermixed that it is impossible to fully extract individual sources and any attempt to do so would be worthless because the people do not care. Most of the larger temples scattered through Taiwan have similar admixtures of gods and rituals.

Religious Specialists

There are a variety of kinds of religious specialists consulted by villagers although none live in the

village itself. Each differs in the types of powers he possesses and/or the rituals he performs while two of the same type may have different qualitative ratings. Some specialists charge a fee for services and others depend on gifts. Nothing will be said directly if the gift is too small, but the practitioner will not return the next time he is called. Everyone knows what amount constitutes a proper gift. For the most part, the community has established rather permanent relations with certain individuals who have a regular practice in the area.

One significant type of practice involves specialists in feng shui (literally wind and water but usually termed geomancy). Geomancy is related to the Yin (negative) and Yang (positive) factors and the Five Elements: water, metal, fire, earth, and wood (Burkhardt, 1953:129-33). "Geomancy deals with the supernatural relation of geographical locations to human events" (C. K. Yang, 1967b:263). Certain geographical locations have influence on human life, negative or positive. These factors are especially important with regard to the location of tombs, building sites, and the kitchen stove. Almost all village adults are amateur geomancers, i.e., they possess rudimentary knowledge of significant elements. Moreover, villagers believe they can generalize from previous events. For instance, a house may be built right next door to a geomancer-directed house without professional consultation

by duplicating the orientation. Since there are family burial plots, geomancers are not always used for additional burials.

The most frequent call for a geomancer to come to Sanlei is to orient the kitchen stove. Sanlei villagers usually consult a geomancer from Pouti but occasionally employ a more expensive one from Hsin Tien. Although the literature mentions relocation of ancestral graves if a family has great misfortune, this has not happened in Sanlei but about twenty years ago, one family removed a rock near a tomb and planted three trees as directed by a geomancer who was called as a consultant after much misfortune.

As previously stated, Talei Li has many excellent sites for tombs with powerful feng shui coordinates. Two of the most famous geomancers in Taipei have purchased many of these sites. They then select them for clients and also sell the sites to the clients and make a profit both on the sale and as a consultant. One village mason and two village women earn a significant part of their incomes helping erect the elaborate tombs.

Shamans of various kinds are still consulted for illnesses although villagers believe the frequency is declining. Three different men, all from nearby villages, are called in periodically. However, trips are also made to the consulting rooms of two others, a ching tsao hsien

(master of green grass) in Hsin Tien and a mi fang hsien (master of secret remedies) in Taipei. Shamans usually appear to be consulted with reference to illnesses which are psychosomatic in nature or those which are relatively hopeless, i.e., medical advice has not worked. This latter may be merely because sufficient time for medical treatment to take effect has not elapsed. If someone is sick, many kinds of practitioners may be consulted quickly, both medical and religious. Serious illness in children, male and female alike, stimulates the call for a shaman quicker than would identical symptoms in adults. Shamans are rarely used for old people (beyond age 60) who have not been vigorous recently because after 60, death is considered inevitable and any years granted beyond 60 were only due to the favor of the gods. With a terminal illness, the family patiently waits for death without treatment.

Some of the temples in Hsin Tien and Taipei have priests such as Tao jen (Men of the tao). Priests are consulted with reference to the suitability of a pair for marriage (kan ming hsien) and also for illness (hung t'ou Taoist). Curing involves a procedure much like that described for the fortune sticks in the village temple except the stick specifies a potion to be consumed instead of a fortune. Priests themselves do not have the specific personal powers of shamans but do have the ability to perform proper rituals. Two part-time hei t'ou (Black-headed

Taoist priests) from Pouti officiate at almost all village funerals.

There are various other kinds of magicians, diviners, fortune tellers, etc., who are occasionally used by Sanlei villagers. Coins, grains of rice, palm reading, and a pile of sticks are all used for predictions and explanations. The eight characters of birth (hour, day, month, year) are important both in predicting the future and determining suitability of marriage partners. Astrology is well developed and the calendric cycle of good and bad days is everywhere evident.

Two part-time hung tou (red-headed Taoist priests) from Hsin Tien participate at many big ceremonies in the village and li. Finally, one particular part-time shaman, a fa shih and his assistant from over the mountain were frequently hired for certain ceremonies. Perhaps the term hired is too strong for no fee was ever discussed when an invitation was extended but the fa shih always received a sizable gift for officiating, the equivalent of a week's pay for an experienced farm laborer, plus elaborate food. This man has the ability to inspire others to go into trances and then he can interpret what they say if they "speak in tongues" or read the "spirit characters" a man in a trance may write in sand which is spread in a fine layer on a table.

There is a final kind of service that religious practitioners provide for community residents although few villagers would be likely to admit it explicitly, i.e., they provide justification for social acts which might be contrary to community standards or which might otherwise create difficulties in interpersonal relations. For instance, assume a family wants to give up a daughter in adoption but also does not want to create an impression that they are releasing her because the family can not afford her support. If a shaman of some kind orders the adoption, the family can accomplish it without censure by claiming the gods wishes must be obeyed. Someone can be found to interpret the god's desires in a manner so that anything and everything can be justified.

A Fire Purification Ceremony

As an extended case study, I will present an account of a non-cyclical but important religious event held in Sanlei in November of 1966. The ceremony was entitled the "Fire Purification of the Gods" and differs only in minor details from that described by DeGroot for Mainland China (1892-1910). The essential part of the ceremony is ritual purification of the gods by carrying them through a fire of god's paper money in sedan chairs carried by bearers who are ritually clean and have no foot coverings.

Similar ceremonies have occurred throughout Taiwan periodically with strong evidence they have increased in

frequency during the past twenty-five years, probably for two different reasons. One reason is related to the recent increased prosperity. Although people seem to greatly enjoy the big festivals, they are very expensive. With the increased prosperity, there are both more ceremonies such as the "Fire Purification Ceremony" and greater participation together with increased expenditures on regular ceremonies.

The second reason is more explicitly related to the "Fire Purification Ceremony" in particular for the ceremony is considered partially a response to crises and change. During these past twenty-odd years there have been many significant events in Taiwan such as a change in the official government and a multitude of cultural and social changes accompanying the expanding economy. Moreover, there is a constant fear of a Taiwanese attack on the Mainland or a Communist attack on Taiwan. Consequently, there have been four "Fire Purification Ceremonies" in Talei Li in the past twenty-five years, two of them during our eighteen month period of study and one of the remaining two, the previous year.

Carrying a god's statue through the sacred fire after proper ritual purifies it and helps make the god more powerful and thereby, temporarily raises the rank of the temple in which the god resides. Higher rank will bring more people to the temple to worship and the more people

that come, the more powerful the gods in the temple are assumed to be. Part of the reason for the ceremony in Sanlei was a desire to raise the status of the temple for once raised, it is possible but not probable that the higher rank will be maintained. If miracles occur more people will come, and as stated, the major key to assessing rank is the number of worshippers.

There are two forms of the "Fire Purification Ceremony." The first concludes the whole process on a single occasion which may take one or more consecutive days. The second form requires two nearly similar processes some years apart although each part may take more than one day. The ceremony to be discussed in this section was the last half of the two-part ceremony, entitled the "tail." The first part, the "head," was held just under two years previously.

The "head" was originated, planned, and conducted by three cooperating sworn brothers associations. These three associations consisted of all younger men (maximum age 35) and most of them were part of the progressive faction politically. They paid most of the costs themselves but did accept donations from wealthier villagers. Although almost everyone in the village eventually participated in the ceremony itself, this was the first major affair ever held in Sanlei that was not supported by the usual assessment procedure and temple committee and many

people therefore felt that the ceremony was not really theirs. One sworn brother explained that he got the idea and started the whole process because of a ceremony he attended at a village near Hsin Tien.

The three sworn brothers associations had originally planned to conduct the "tail" in the same manner. However, after many discussions over a period of time lasting nearly a year, it was decided to handle it in nearly the same manner as most ceremonies except that the committee would not only include a pot master and an assistant from each of the six lin, but one assistant from each of the three sworn brothers associations. One of the ten committee members was a female, selected by the gods in the usual way by casting the shen pei.

In the meantime, the temple committee for the Erhlei temple, the temple which actually encompassed all Talei Li, decided they could not let the Sanlei temple get too far ahead because the li temple was supposedly higher in rank. They therefore planned a "Fire Purification Ceremony" of their own. It would be a much more elaborate one-occasion type falling between the Sanlei "head" and "tail" ceremonies.

The first task of the Sanlei committee was to select a date. This was not an easy task for the date had to be auspicious, not too close to other religious holidays, not too close to the li Fire Purification Ceremony, and during

a relatively slack agricultural period. The li chang (li mayor and resident of Sanlei) became an ex officio member of the committee because of his experience and knowledge and his ability to mediate disputes and calm disputants. Additionally, since money was to be collected and expended, he had an excellent reputation for honesty and frugality which would help protect against the usual charge that temple committees waste public money for their own pleasures.

Sanlei Ts'un is in a curious position as previously stated for it has its own temple but is also part of the li temple organization which is centered in Erhlei. The residents are thereby partially in competition with themselves. Sanlei is the only village in the li whose residents financially support two different temples. As previously explained, one li faction includes T'oulei and Erhlei and the other, the rest of the li. Although verbally accepting the temple in Erhlei as the li temple, at times people behave as if it belonged only to the Erhlei-T'oulei faction. For the li ceremony an expensive opera was hired. The Sanlei committee finally agreed on a puppet show which was much less expensive although some committee members wanted to hire another opera to show that the Sanlei and Erhlei temples were equal.

In addition to the above tasks of setting a date and arranging entertainment, the committee was responsible

for obtaining the fa shih (shaman), getting the police permit for a ceremony, inviting official guests from outside the community, renting the extra sedan chairs and other equipment, and purchasing expendable items such as incense sticks, paper money, and candles. All this required preparation of an estimated budget, distribution of assessments to residents, obtaining pledges, and later, collecting the money and disbursing it. As would be expected, the planning required many meetings and also periodic appraisal of general village sentiment about details. Although the committee was nominally in charge, the whole community was actually involved in planning.

Finally, the day of the ceremony arrived. About seven o'clock in the morning, most of the villagers gathered in a field just across the river from the village where the second rice crop had recently been harvested and the ground was hard. In the center of the field was a Table of the Eight Immortals holding a number of god's statues, candles, incense sticks, and a fine layer of sand. In front of the table were six sedan chairs, a bamboo pole strapped on each side. Two were fairly small and could be carried by two men and the remaining four required four men each. Tied to the chairs with large red ribbons were ten of the Sanlei temple gods.

Twenty young men under thirty years of age had been selected as sedan chair bearers. Several had participated

in the ceremony the previous year but both neophyte and veteran were frightened for they knew they would eventually walk through a fire and all truly felt they would probably be burned. They had ritually prepared for the ceremony. All were supposed to have refrained from sexual intercourse for twenty-four hours, taken a thorough hot bath the night before, and washed their feet again in the morning in the temple just before coming to the field.

Upon a signal given by the fa shih in charge, the sedan chairs were hoisted to the men's shoulders and would not be lowered for about four hours. Two older village men carried eight-inch gongs which they beat as they walked about the field, frequently closely approaching the bearers and banging the gongs especially loudly in their ears. The shaman carried long heavy incense sticks which released thick smoke and a pungent odor. He walked from bearer to bearer, waving the sticks in their faces and whispering in their ears. After a half hour in the hot sun, some of the chairs started to sway, to lurch forward two or three steps, and to return back into line. One set of men stumbled and bumped into the group next to them. One of the men in front on a four-man chair started to tremble, his eyes were closed, and then he took off running in a wide circle, his three fellow bearers struggling to keep the chair balanced. He was "possessed by the gods." Following quickly beside the chair were the two gong-beaters

and the shaman who helped guide the chair so that it would strike other chairs. It is believed that "possession" is contagious and by touching chairs, perhaps more people would become possessed. If the touching is rather vigorous, the transfer process is more likely.

Before long, all six chairs with their respective crews were involved, dashing about here and there. Since most of the villagers were in the same field, they too had to dash about avoiding flying sedan chairs. A few villagers got knocked down and some bearers were severely bruised as chairs crashed into each other. We did note that at no time did any chair run into the table in the center of the field and at no time did it appear that all members of a single crew were in a trance simultaneously.

Follow-up interviews afterwards revealed that all but four men felt that they had been in trances at some time during the day. Some felt that they were always aware of what was happening but had no control over it which they described as similar to when a man had too much to drink. Other men stated that periods were completely blank with no memory at all of what had happened. Most men had several trances, none seemingly exceeding ten minutes in duration.

After about an hour, a chair halted in front of the table and lines were marked in the sand with one of the poles used to carry it, but the shaman said the lines made no sense. Character writing went on in a similar manner

sporadically all during the day. After each character was written, the sand was smoothed out again in preparation for the next. These characters were all special spirit writing, direct communications from the gods which only the shaman is able to read and interpret. The statements may be criticism or praise of specific villagers or general information. Eventually, one character would proclaim when the fire for the walk should be started.

After about four hours, around 11:00, everyone quit for lunch. It is possible that the gods could call for the fire within a very few minutes after the ceremony started, but no ceremony in memory however, had ever started before the first day's lunch break. Lunch was much more elaborate than usual and there were many guests in attendance. Outsiders had been arriving all day during the morning to observe the men running in the fields and to become guests for lunch. Few villagers did any regular work that day; even much of the cooking was performed by outsiders such as ch'in ch'i (affinal relatives) or sworn brothers from other villages who worked without pay. In turn, Sanlei would provide cooks for ceremonies, funerals, and weddings in other villages. Four sworn brother associations gathered for an extra lunch together. Politicians from Hsin Tien and the county visited each of the associations in turn for a few minutes and also visited the lunches hosted by the more important people.

At 1:00, everyone was back in the field and the ceremony started again. The temperature was now much hotter so it did not take as long as it had in the morning for the trances and running to start. A pair of chairs were carried down the hill, across the bridge, into the village proper, and in and out of the temple. Many villagers became frightened as they observed the chairs head for the village for if the gods were truly angry with some man, the chair would enter his house and do some damage. The fear was not of damage but of the knowledge that the gods were strongly displeased. Fortunately, this did not happen although it had at the previous Erhlei ceremony to one important man. In this manner, any person in the community, no matter how important, can be severely criticized.

The gods spoke through two different young men at various times while they were in trances. Both were surnamed Liao and were members of old village families. One was a very proper and filial type but the other was considered a little too aggressive and had a reputation of frequenting the wine houses. The statements were in Taiwanese although any language is possible, even some spirit languages which can be translated only by a shaman. In total, there were more than seventy statements, at least one for every household in the village and a few extra general statements. Some statements were complementary

but a majority were critical although all reinforced cultural values and standards.

A sample of the god's statements is listed below followed by my personal comments or explanations. As previously stated, in a normal situation, few of these statements would be permitted for seldom is there a face to face confrontation between an accuser and accusee unless the situation is going to degenerate into a serious fight. (Names are all disguised for obvious reasons.)

1. "Liao A.B.! You are a sincere man. I have helped you to recover your health. I am happy that you always come to clean and take care of the temple." (Subject had prostate trouble with considerable discharge. After various types of medical and shamanistic treatment failed to bring relief, he made a pledge at the temple that if the gods helped he would worship daily forever. The pain is almost gone and he seldom has any more discharge. Each morning, at daybreak, he opens the temple, pai pai's with incense, and puts flowers in the vases. Every villager is aware of his pledge and performance.)

2. "Liao C.D.! You are a bad-hearted[9] woman. You would not clean the dirty ditch in front of your house so the dirty water runs into the pond where other villagers wash clothes and vegetables." (Subject immediately ran off to clean her ditch. She frequently quarreled with her husband and his brother's wife.)

3. "Liao E.F.! Your second son has poor health. I will give him a charm. He should drink it in the early morning." (Subject is a community leader and head of an extended household. The charm is a package of herbs to be mixed with hot water. "To give" means that the speaking god will guide the proper stick out when the vase of medicine sticks is shaken.)

4. "Huang G.H.! Your wife is sick because she dried women's underpants in the kung t'ing in front of the gods. I will give you a charm for her to drink." (Subject is a local official and well liked.)

5. "Liao I.J.! Old man, you are a good person and serve the gods. But your son is a bad-hearted person. He says bad things about people behind their backs." (The son is unfilial and wants to marry a village girl but her parents are refusing the match by asking a bride price of more than five times the standard amount.)

6. "Huang K.L.! Your sons' eyes hurt because you picked a bad day to fix your kitchen. You never worship the god's soldiers on the 1st and 15th of each month. You should worship on these days. I will give you charms for your family to drink." (Subject has a reputation for cheapness and refuses to spend proper amounts on ritual.)

7. "Yu M.N.! Your eldest son is not strong because the altar in your kung t'ing is not properly located. You should think about your second son's marriage because he is too embarrassed to talk to you about it." (The altar is one of the two in the village on the side rather than the back wall in relationship to the door. The man through whom the gods were now speaking was the "second son" mentioned in the statement.)

8. "Chiu O.P.! Your son is fine. Do not worry about him." (Subject is poor but considered to be a good man. His son is in the army and stationed in Kin Men.)

As can be seen from the above samples, the gods speak through the young men to reinforce common values. We talked to many people afterwards and none thought that the two boys through whom the gods spoke were bad-hearted people; that is, they believed that the statements really came from the gods. They said that in the past, bad-hearted people have tried to pretend they were gods but they always got caught.

About 3:30 p.m., the shaman interpreted a character written in the sand with the poles of a sedan chair as

signifying the gods were ready for the ceremony. (It has been known to take as long as four days to reach this stage.) The equivalent of twenty bushel baskets of paper money (sacrificial money, not real bills) was placed in a pile about three feet wide, twenty-five feet long, and over a foot deep. The pile was then set on fire for the high point of the ceremony was near. Almost every villager and guest were present as observers for runners had gone into the village to collect people as soon as the gods stated they were ready.

The first chair, after a false start running beside the fire down its length, was carried the length of the fire very quickly. The men were completely without foot covering and the fire was hot enough to singe their rolled-up trousers and also to burn the hair off my hand which I had put near the fire and into it to see if it really was hot. Soon, every chair had gone through the fire at least twice, each god thus becoming purified by passing through the sacred smoke over the sacred fire. After the first few trips, the speed of the bearers diminished to just about a fast walk. As the fire died down, older village men carried both the remaining temple gods and private and sworn brothers association gods through the fire by merely wrapping their arms around them and walking the length of the fire at a fast pace. Every god in the community was eventually purified. Small boys and girls ran through the

smouldering ashes at the end and the ceremony proper was over.

I cannot explain why no one was burned. I carefully examined the feet of several men over the next few days and none turned red, blistered, or seemed painful to the touch. The villagers all claimed that the men were protected by the gods. One village participant, a boy who became a good informant was as mystified as I. He too carefully examined his feet each day because he felt he was being burned during the trip through the fire, but now claims that the gods must have protected him. In this manner, the ceremony helped dispel some of the doubts common in the village with reference to the power of the gods.

The gods were then returned to the temple or their regular resting places and shortly thereafter, the puppet show began. Elaborate food sacrifices were made to the gods in the temple, to the earth god, to the negative spirits, and in the homes as everyone observed the quality and quantity of each other's sacrifices. Almost every household had elaborate dinners that evening with many guests from outside and inside the village including elected officials, salesmen and several policemen from both Pouti and Hsin Tien. There were many residents from other nearby villages and eventually, Sanlei villagers would be guests at their affairs.

During the same evening, two wedding feasts were held although the respective ceremonies had begun in the

m
m
C
h
d
p
w

m
c
g
T
a
c
w
t
t
t
e
b
ma
lo
ar

mi
mer

morning as usual. The hosts explained that there would be many guests and elaborate food for the "Fire Purification Ceremony" in any case and therefore, it was economical to have a wedding the same day as a big village ceremony. Additionally, the gods had already decided the day was auspicious for worship and therefore, also auspicious for weddings.

The drinking and eating parties lasted until after midnight, an unusually late hour in village life. Much conversation was devoted to the ceremony and to what the gods had stated about the village and individual villagers. The various statements from the gods were badly distorted as they spread through the community for with the gongs clanging and people running and screaming, many statements were none too clear to start. Additionally, since they tended to be invested with high levels of emotional content, they were subject to considerable distortion as they passed through communication chains. No one villager had heard every statement in the original form. The statements will be repeated innumerable times and will be remembered for many years and the ceremony itself will be discussed for a long time, both in the village and in the region for miles around.

The last official function of the responsible committee was fulfilled the next day. At the meeting, the members prepared a final accounting of receipts and

d
T
i
h
$
f
s

c
u
i
v
t
s
s
m
c
g
o
pa
Th
ar
si
on
mo
mu

disbursements and posted it on the temple bulletin board. The account included a list of donors, household head only, in rank order by size of donation with every village household listed as contributing something. There was nearly $700.00 left over so the committee decided to spend $60.00 for a temple scroll and to donate the balance to the li school.

The ceremony appeared to be over but its latent effects will long linger. Already comparisons were being made with a ceremony conducted over forty years previously in Sanlei and with other ceremonies held in surrounding villages. With the requirement that many villagers had had to work together to conduct the affair, the ceremony was a strong integrative agency for the community. It also served to elevate Sanlei's status in the area and by having many guests, past favors were repaid and new debts were created. Young men vividly learned of the powers of the gods--the fire walk was spectacular for participant and observer alike. Tension was also released by the many gay parties, especially since they included much drinking. The drunken villager is either very happy or very quiet and withdrawn with an extremely rare appearance of aggressive behavior. Since it is considered very bad to drink one's self into a stupor more than once in a lifetime, most men learn to control their liquor, i.e., know how much they can drink and act accordingly.

The affair involved a sizeable expenditure of resources. The temple committee collected and spent over $5,500.00. The two weddings scheduled because of the ceremony, one with eight tables (80 guests) and the other with five tables (50 guests) meant a dinner guest fee[10] alone of over $6,000.00 without the additional gifts and expenses. Sixty-one other households held elaborate dinners with feasts too for there were more guests in the village than residents. For one of the richer households, the additional expenditures on food and drink as compared with a typical day exceeded $700.00. To assess the size of this figure, note that an experienced farm laborer earns but $50.00 for a full day's work. No villager seemed too unhappy about the expenditure as people claim they now "dare to spend money" (see Glossary C). The expenditures for pai pai have increased in Sanlei village, a process that seems common to all of Taiwan and which reflects the overall growing prosperity.

Summary

Religion is very important in Sanlei Ts'un. Although little importance can be attached to an organized hierarchy of religious functionaries, there are many kinds of unorganized specialists who are consulted as needs arise. Additionally, almost everyone in the village can and does perform religious acts regularly. There is daily worship in most homes and special worship connected with almost every

important event: life crises, health, and economic. The home is the central focus of worship and in all but two village homes, the most elaborate and expensive furnishings are those connected with worship. The second most important center is the temple which is the most elaborate and expensive building in the community. Although Sanlei village is highly integrated, only for religion does the community gather in one place to act cooperatively with any degree of frequency. At the li level, the temple and religion serve a similar function except that in addition to religion, politics and the school also feature community-wide cooperation and joint activities. Religion is the unifying element, at least on a manifest basis, of larger kinship organizations such as the compound and lineage and such voluntary organizations as the sworn brothers and god's associations.

Religious values support the dictums of social control. Although there are reasonably high levels of skepticism regarding the efficacy of religious acts, no man is truly an atheist, i.e., although many claim not to believe that a particular act works or has power for good or evil, almost everyone is afraid not to perform the required ritual when it is specified as appropriate.

There are so many kinds of religious and magical functionaries, that one can be found to recommend almost any kind of desired action. This recommendation supports

a villager in what otherwise might be an unpopular decision or action because he can then say the gods so order it.

Additionally, religious events are fun and along with certain life crises events, almost the only periods of gaiety in an otherwise fairly drab existence. It appears, as suggested in Potter's conception of "The Limited Good," richer villagers do fear to practice conspicuous consumption (1965). One normally avoids coming to the attention of villagers, government officials, and gods, in order to avoid arousing feelings of jealousy, but rich food and drink is not only permitted but is strongly encouraged for holidays. It is proper to offer expensive foods to the gods and whatever is left over when the gods finish can be eaten by anyone without fear of censure. Indeed, it should be shared with guests for jealousy is not aroused when people are only eating the god's leftovers. This set of beliefs permits both self-indulgence and a means for validating one's social position in the community, i.e., the richer the food, the higher the status. For guests (especially poorer ones), there is an opportunity to eat rich foods and delicacies rarely experienced.

It will be demonstrated in Chapter IX that religion also serves to regulate the divisions of time--yearly, monthly, and daily and that much of the leisure time is justified on a religious basis.

Finally, during periods of ultimate crises, various aspects of religion and ritual emotionally support an individual. Although medicine may fail, religion or magic may work and if neither prove effective, there is the underlying concept of fate, i.e., all had been ordained at birth. By using magic and religion, one has attempted all possible avenues towards achievement of some goal.

CHAPTER VIII

THE LIFE CYCLE

Although the most general patterns will be abstracted below, it must be made patent that there is great variability in the life histories of individual villagers. China is a high civilization and a defining characteristic of a civilization is the existence of a large number of modal patterns of behavior. In addition to differences due to sub-cultural variation and individual personalities, there is structured variance related to wealth, sex, birth order, family type, etc. For example, the fact of an adoption would make a significant difference in an individual's life history and although not everyone is adopted, a sizeable minority of village children are adopted.

Taiwan is experiencing great economic and political changes and these too are modifying traditional patterns of the life cycle and its stages. Formal education furnishes a prime example. Currently, two significant stages in the life cycle are marked by entrance into the first grade, the pre-schooler versus the student and the next stage is marked by graduation at the end of the sixth year of school, the change from student to young adult status.

Very few villagers are educated beyond the compulsory six years although the government is now planning a change from six to nine years of compulsory education.[1] This change too will have a major effect on the typical life cycle for entrance into the labor market (and achievement of young adult status) will be delayed an additional three years. The immediate direct effects on the economics of village life are obvious but there will undoubtedly be concomitant social and cultural effects. For example, at present, boys do not start smoking until their formal education is completed. Even if a boy's age cohorts are working and smoking, the village boy still in school does not. If education is extended three more years, boys will probably not start smoking, on the average, until they are three years older than the present beginning age.

The effects resulting from a change in the length of compulsory education suggested above are more than mere idle speculations, they are derived by extensions of a process which has already been realized in the last twenty years. Among people over age 70 still living in the village, there is only one literate person, a male. He claimed that when he was a young man, although the village population exceeded 250, only about 15 people attended the local school, only two of them girls. As a clear demonstration of a pattern change, at the time of the study, there were only three village children (one male, two female) of appropriate ages not

Table 11. Percentage of Sanlei Villagers Who Graduated

Age in 1965	Year of Graduation	Percentage Graduating Male	Female
15-19	1960-64	96.7	87.6
25-29	1950-54	90.0	50.0
35-39	1940-44	66.7	22.2
45-49	1930-34	66.7	16.7
55-59	1920-24	50.0	10.0
65-69	1910-14	27.6	2.3

in school and satisfactorily progressing within one year of the normal grade for their respective ages.

The figures in Table 11 suggest the rate of change in education over time for Sanlei village by means of an analysis of current living residents in various age groups. In 1915, school was not really a significant stage in the life cycle for most villagers but by 1925, it was the most frequent (over 50%) pattern for males and by 1955, for females. By 1960, there remained scarcely any other pattern with reference to ages between 6 and 12 except to attend school. Actually, the current three exceptions are not a single structural type for each truant has a unique reason.

With reference to the stages to be discussed below, changes such as the above example have occurred in the memory of living villagers. In addition to those related to economics and education, important changes are connected with the population growth, increased life expectancy, and the availability of modern medical facilities including Western hospitals and birth control clinics.

The Desire for Children

The following expression of the Confucian design for living is still significant after 2000 years: "Of the offenses against filial piety, lacking descendants is the worst" (Hsu, 1963:29). Barrenness is not only contrary to duty to one's ancestors, but a man without offspring to worship his soul after death may become a wandering spirit or be confined to one of the many hells. Additionally, social security is essentially provided by one's children and moreover, children are a source of prestige and a means of validating one's position in the community. It would be very rare for a childless man to fill an official position or play any significant leadership role in the community. A woman gains full status and membership in her husband's family through her children. There is a culturally provided escape for the biologically barren: an adopted child is the equivalent of a natural child.

The pressure for descendants has other concomitant effects. A family without natural children is nearly forced to adopt one or more by community pressure even if they had no real personal desire of their own although the cultural values and logic of security mean the latter would be unlikely. Almost every woman gets married as there are few acceptable alternative roles for women outside of marriage. In the rare case of a woman who never marries, i.e., some prostitutes, or in the case of widowhood before bearing

children, an adoption is still likely in order to provide security in old age. Historically, Taiwan has had a high sex ratio (Barclay, 1954:212) and nearly all females were able to marry; the rate exceeded 99% married every year since 1905 for women over 40. However, some men were necessarily without mates; never-married men over 40 always exceeded 4% for the same period (Barclay, 1954:211). Most men who never marry have some kind of social defect such as poverty or a drinking problem but many of these men also adopt children such as the two never-married men in Sanlei with adopted children.

Martin Yang reports that the number of children desired in the "ideal" family for Taiwan has been decreasing over time (1962:69). This finding is not based on a longitudinal study but on a comparative study using respondents in different generations. Interviews in Sanlei village support his findings. However, all attempts to simulate longitudinal studies by assuming an age range suffer the same obvious defects. For example, if Sanlei women beyond child-bearing ages are divided into two groups, those who bore more than four children and those who bore less, there is a strong positive correlation between the actual size of a woman's family and her report of an "ideal" size. For young married women, it is possible that the attitude may change in time, i.e., her desires and expectancies may become congruent with her real situation. Nevertheless, the number of children desired for an "ideal" family is

significantly less for each ten-year age cohort. It is interesting that men's reports are nearly identical to their wives and both sexes agree that women are predominantly in control of the eventual family size.

The typical desired family size among women of child-bearing ages (and their respective husbands) is now four or five with no one listing less than three and only three women and five men, more than six. The pair who desired the largest number was a married couple with ten children who both wanted twelve. In spite of the reported bias towards males, if the number is even, the desire is usually for an equal number of males and females, but if the desired number is odd, males are nearly always expected to constitute a majority of one. Only a few very old men reported a desire for nearly all males but everyone agrees that if a couple have only one child, he should be male.

These reports from Sanlei should not be construed such that there is not a strong preference for males. Rather, the preference is not as strong as has been suggested in some of the literature (see Chapter X). Almost everyone desires a male for the first child and a family with all boys will be viewed by neighbors as fortunate while a family with all girls is something to be pitied, but not as much as a family with no children at all. After a string of girls, a family may name the last as "our last daughter" in hope of breaking the chain of misfortune. There is no corresponding practice for a string of boys.

Almost everyone agrees that a couple should have the first child as soon after marriage as possible and I found no married childless couples employing birth control measures. It is proper to continue having children until the first grand-child is born. Although it is expected that intercourse will continue as long as physically possible, a couple who continues to have children after they have become grandparents will experience much ridicule.

Pregnancy and Birth

Pregnancy and birth are periods of anxiety in every society for they are physically dangerous for mother and child alike since either may die. There may be a spontaneous abortion or defective children may be born. Consequently, almost everywhere, special ritual is required with respect to various aspects of the period of pregnancy.

Seemingly, in Sanlei, some of the ritual or belief is supported by modern medical discoveries, i.e., certain food requirements such as increased consumption of meat and eggs for expectant mothers is medically sound. The origins of other customs are lost in antiquity. It has been posited in another context that certain proximate events were often interpreted to have spurious causal connections (Carroll, 1963:5). In any case, there is a great host of Chinese beliefs connected with pregnancy and birth with attendant rituals and avoidances which are exceeded in number only by those related to death.

For just about every other event in village requiring religious-magical activities, men predominate in their performance. It appears that women may worship individually more often than men, but if an activity is required rather than voluntary, men usually perform it. Women are dominant only in religious activities which focus on pregnancy and childbirth. Before birth, the only requirement for men is continuance of sustenance responsibilities, tendency to indulge his wife's whims (particularly food cravings), and sexual abstinence during the last month of the pregnancy. He has responsibility after birth for a month's continued sexual abstinence and joint participation in naming, celebrating, and introducing the child. The expectant father has no requirements regarding food or ritual which are the equivalents of those for his wife.

The delayed onset of the menstrual period marks the beginning of pregnancy. Almost all women state pregnancy is accompanied by a craving for odd foods which comes and goes all during pregnancy. Most of the foods are not very expensive but are unusual or out of season. Morning sickness is fairly common but only present in a minority of cases. Aside from certain forbidden activities, morning sickness or pregnancy in general is not expected to interfere with a woman's daily activities and hard work. Work continues right up until near parturition for everyone agrees that hard work, particularly many walks up into the mountains, will make parturition easier.

The husband usually is told matter of factly as soon as the wife suspects she is pregnant for only wives keep track of the menstrual cycle. Outside the immediate household, others are not normally told until the woman starts to show but since social relations are so intimate, word soon gets around. Outsiders are really curious only about brides but only old women in the village ask brides openly, usually accompanied with a cackle and slapped knee, "Are you pregnant yet?" The girls never answer and are greatly embarrassed while older people laugh openly and younger ones smile. From older women, the expectant mother learns what should be done, what is good to eat, what food and activities to avoid, etc.

The pregnant girl may have prayed to a particular god or a variety of gods for assistance in becoming pregnant so the answer to the prayer should be recognized with rich food sacrifices. Rarely does anyone regret a pregnancy.

There are many taboos for a pregnant woman such as the set which derives from the belief in Tai Shen, the god of the pregnant womb. As soon as a woman becomes pregnant, Tai Shen enters her room and hides somewhere, under the bed, in a chair, on a picture on the wall, etc. If he is disturbed, he may harm the baby, possibly causing an abortion. Thus, it is necessary to keep the bedroom undisturbed all during pregnancy. The belief prevents sweeping and cleaning

and moreover, since a woman typically is pregnant for a period of time before becoming aware, the bedrooms of potentially fertile women are seldom cleaned. The only truly safe period is 30 days after a child is born, the morning before intercourse is resumed. If Tai Shen is inadvertently offended, which can be detected through a sharp pain in the abdomen at the time of the disturbing activity, it is necessary to call in a shaman to pacify him. Because of Tai Shen it is necessary that parturition take place in the regular bedroom.

An interesting change in this belief about Tai Shen is related to modern medical practices emanating out of a small public hospital in Hsin Tien which provides a doctor for child birth. The mines provide the families of workers with medical insurance and many miner's wives are therefore having babies in the hospital, fairly common in Erhlei but still rare in Sanlei. Twenty years ago, it was impossible to discover the hiding place of Tai Shen but today, religious specialists are able to detect his hiding place so the object in which he is hiding can be taken to the hospital in Hsin Tien with the woman in labor.

There is a whole host of other taboos for the pregnant woman: tying strings in her bedroom will effect the baby's fingers; using scissors, the ears; needles, the eyes, etc. Funerals are likely to cause miscarriages. Wedding ceremonies are also off limits because the belief in hsi

chung hsi (good counteracts good) means that either the mother or the newlyweds will likely suffer harm. There are many other such strictures but almost any lapses may be counteracted by the activities of a shaman.

As previously stated, it is hoped the first child will be a boy and boys will continue to be desired following the first child until the desired number is acquired. There are rituals to change the sex of the unborn child from female to male, some performed by the family and others by specialists, but villagers do not believe them very effective. It is also possible to detect the sex by various means such as computations involving the mother's age and month of conception.

Most births in the village are attended by a local unlicensed midwife with the assistance of a few older women while men are excluded. A woman should not make much noise during birth as everyone lives crowded together and loud crying or screaming would be disturbing. Herbs have been consumed monthly commencing the third month with more added as the expected delivery date nears. Women give birth while lying down on their backs.

The new baby is wiped with sesame oil and a cloth soaked in salt water is used to clean his mouth followed by sugar water. Eye drops are irregularly used, increasing now in frequency but still only half the time for they cost extra. The baby is wrapped in a cloth and placed next to

the mother. The afterbirth is usually buried in or next to the river but many villagers preserve the umbilical cord for good luck. Nursing will commence within one to three days, as soon as lactation commences, and to aid its beginning, the breast is periodically massaged. Before the first suckle, the nipples are washed with rice porridge and green onions.

In Sanlei Ts'un, the mother will now have one month for recuperation, tso yueh. It starts soon after birth with rich foods such as eggs in sesame oil with wine and heavily sweetened orange peel soup and the rest of the month her food is unusually rich with great emphasis on chicken. During this month, she does few of her regular chores and is confined to the house where she can neither bathe nor use salt. Other women in the family do the work; the two most likely aides are mother-in-law and mother. Neighbors often assist as for example, the daily wash is usually done by the group with whom the new mother normally washes in Sanlei. Having a boy is considered much more exhausting than having a girl and therefore, less will be expected of the mother of a boy.

Three days after birth, the fact is reported to the family ancestors by an older female member of the family and the natal home of the mother will be notified, if they have not yet heard. For some girls who were adopted and later married out, both natal and adopted families will be advised. Gifts may be sent back.

The authorities want the birth registered as soon as possible but cultural values are in opposition since a baby is not quite human until 30 days have elapsed. Funerals, for example, are only conducted for those who live at least 30 days.

The end of 30 days is marked by a major ceremony, man yueh (full month). The baby's head is annointed and shaved and then he is taken outside to show the neighbors. The family of the baby's mother provides a complete set of clothes which tend to decline in elaborateness in direct proportion to the number of grandchildren. In Sanlei, almost as a mirror image, the family of an adopted-in husband often provides the outfit and gifts if financially able. There will usually be a luncheon party to celebrate man yueh with food provided by all four grandparents.

At the ceremony, everyone will hear the child's name. The surname should be obvious but because of the number of adopted-in husbands, it is possible the child could receive either mother's or father's. Although agreements were originally considered clear, their interpretations are often a matter of dispute and some people also change their minds. There should be two more parts to the name but a very few children only receive one although the latter practice is disappearing. Every child under 12 in the village had two names in addition to his surname although several adults had but one. One name is uniquely a child's own. The middle

name may be unique, may be designed to complement the given name, or may reflect a family situation, i.e., it may indicate generation by use of the poem described in Chapter V or it may be merely common to all one man's offspring, different for boys and girls.

Names alone can usually be used to distinguish sex although there are some which overlap. Names have magical powers too such that a good name may foster desired qualities such as kung, wisdom. Previously described was the name given to a girl such as "last daughter" to break a chain of girls. Also if a couple has lost several children, a "dirty" name such as "idiot pig" may be given so the child will be unattractive to the gods. Names may be selected by the family or may be selected in consultation with specialists at the temple.

After man yueh, the woman is free to leave the house and resume her duties. Her bedroom, which has been "ritually unclean" by virtue of the birth in addition to its general untidiness will have a thorough cleaning the day after the baby's presentation. Sexual intercourse is expected to be resumed that night so the husband will be teased about this resumption by his close male friends, particularly by his sworn brothers. His siblings or parents are not likely to ever comment on his sexual activities. Only an old woman is likely to make a suggestive remark in public about his

resumption of sex and the situation will be considered very funny.

Babies

There are few formal stages during the early years of growth. Between man yueh and entering school at age 6, only the first birthday is recognized formally and that is not celebrated by many people although more often for boys than girls. When it is celebrated, it may range from an elaborate meal to mere giving an egg to the child in order to promote long life. Informal divisions include such as "in the arms," "toddler," "baby," or "child" but there is little agreement as to when they commence and the terms are non-exclusive.

Children are raised very permissively. Breast feeding lasts two years or longer on a demand basis so that every time a baby fusses or cries he is offered the breast. Mothers breast-feed their own children and occasionally the children of others. A grandmother offers her breast to a child as a kind of pacifier as any woman will give the breast even when dry, to a child as old as seven or eight who is sick or frightened. Most of the time feeding is offered while in a sitting or standing position. Although the breast is an object for sexual foreplay, there is no immodesty connected with feeding a baby in public.

Houses are crowded together and the rooms are small and not private so that aside from some work in the fields,

a resident is rarely alone. Children are always watched but their training is very relaxed and primarily by guidance and example. Only three times did I observe children being beaten although handslapping is frequent and threats are often used. The most common threat is to give the child away for adoption. Children receive lots of affection and considerable fondling. Life is such that few children are really raised in a semi-isolated nuclear family for if their homes do not already contain more than parents and siblings, there are either more distant relatives or good neighbors nearby. Everyone takes some responsibility for raising each other's children although harsh punishment is only administered by a member of the immediate family. Being harsh with a nephew led to one serious argument observed in an extended family. Children are not often held responsible for what they do and everyone claims they just do not know better. For example, enuresis which occasionally continues into the early teens presents a real problem for the parents who normally sleep in the same bed with their children.[2] Yet, the wetting child is rarely struck. Instead, his liquids are curtailed in the evening before bedtime and his parents say he will grow out of it.

Solid food is slowly added to the diet at about three to four months of age commencing first with the thickened water used to boil rice. Weaning is gradual and so late that rarely are problems encountered.

Diapers are exchanged for training pants at about six or seven months of age. These are not closed at the crotch and when the child squats, gape wide, allowing elimination without soiling. When the child is finished feeding or gets an expression on his face that mothers come to recognize, he is held gently in a sitting position suspended over a ditch while mother squats but she will wait only a few minutes. Instead of threats for not eliminating, the child will be coaxed and praised and petted if he eliminates. Full control is not expected until he is over two years of age so his messes are cleaned regularly without open expression of crossness.

Children

The relations between mother and child are usually warm and intimate and remain so all throughout life while the relations between father and child are more formal and distant. It is mothers who are expected to know and understand the children's wishes and serve as a buffer between a boy and his father. For example, a working boy who is turning all his money over to his father might desire a watch but he is unlikely to ask his father for one. He can convey his desire to mother indirectly, mother will suggest it to father, and father will present a watch or money for a watch to his son as if it were his own idea.

Older children take care of younger siblings. Women and children carry children around strapped to their backs

and it often appeared that some children were nearly as big as the children carrying them. Grandparents were extremely indulgent towards grandchildren. The only adult males ever observed sitting on the ground playing games with small children were their grandfathers. Brothers rarely remain intimate for the role of younger brother toward older brother is patterned after that of son to father but not as extreme in formality and authority. Sisters do remain relatively intimate and the brother-sister relationship is variable but usually warm. A woman's brother will often have special relationships with her children and exercises special duties for such events as their weddings, births, and funerals.

Children may gather grass for animals and run errands. Boys help father and girls, mother but their duties and responsibilities are light. Other than caring for siblings, most time is for play although there are no organized games except a form of tag ball learned in school.

The sleeping arrangements in the village furnish a clue to attitudes toward children. As previously described, the typical bed is about 8' by 10'. A husband and wife normally sleep together in the middle. A nursing child is placed next to mother until weaned when boys are placed on father's side and girls, on mother's, in ascending age order, the oldest on the outside. It is felt that children should share the bed with parents until around age 9 or 10 because children have bad dreams and someone should be close to

comfort them.

When a child leaves his parent's bed, he does not sleep alone. There is a separation of sexes at this age so that a household has male beds and female beds and if there is no older adult such as an aunt or grandparent to join, two siblings of the same sex will be transferred together. The bed will be shared until marriage when the newlyweds start off just by themselves for one bed never contains more than one couple enjoying a sexual relationship. The married couple may sleep together the rest of their lives although some old people separate after intercourse ceases.

Education

Primary school is compulsory for six years to the degree that there were only three village children who were not attending school at the time of the study. The five villages in the li share the school located in Erhlei except that the Mainlanders in Wulei send their children to Hsin Tien. There are 423 students in the school, 204 boys and 219 girls.

The school has 12 teachers, a principal, and a janitor. The principal, a Mainland woman, and the assistant principal, also a Mainlander, share a house in Erhlei which is owned by the school. One teacher lives with his family in a rented Erhlei house but all the other teachers, most of them Mainlanders, live in Pouti or Hsin Tien. Six of the

thirteen staff members are males and seven, females.

The principal and teachers are appointed by the Provincial Ministry of Education with the local villagers having no choice in their selection. However, a degree of local control is maintained through the Parent-Teacher's Association which raises part of the money for school construction and equipment.

The qualifications of Talei Li teachers are below national average because an appointment in Talei Li is not a desireable post because of the few opportunities to earn extra income. In order for a student to go on to junior high school he must pass a competitive examination which is nearly impossible to accomplish without supplementary school lessons at night and individual tutoring. Although illegal, all good schools provide supplemental offerings for a fee and thereby, teachers earn a sizeable portion of their yearly income from these extra fees which are shared with the principal. The desire for higher education is not very strong in the village as most villagers do not believe that more education will produce opportunities for more income. Therefore, the li school has no such extra courses and few li children request extra tutoring, denying the teachers and principals the opportunity for a good income although a few of the teachers living outside Talei Li earn extra money tutoring in Pouti.

The teachers and villagers have few contacts as most teachers consider themselves an elite forced to associate with parents whom they seemingly regard as ignorant peasants. Undoubtedly the Mainlander (teacher)-Taiwanese (villager) identities exacerbate the relationship problems (See Chapter I). Only two teachers are highly admired by villagers, one of whom is a Taiwanese.

The school is so overcrowded that the first four grades are on half-day sessions and only the last two grades are full-day sessions. The first five days of the week are primarily devoted to academics but with a mid-morning and mid-afternoon recess. Saturday morning is devoted to physical education, housekeeping, and additional lessons in Mandarin.

Teaching techniques emphasize rote memorization, chanting lessons in unison, and extreme respect for the teacher. Elements of traditional classical education remain a part of the curriculum for a major goal of education is to make good citizens. Everyone memorizes a large number of quotations and classical short stories which possess a moral. This kind of memorization was common in the village even among those who were illiterate and the school merely reinforced and expanded this traditional content. One old village man, quite illiterate, could recite an appropriate quote for any occasion.[3]

There is an interesting contrast in the Chinese and American teacher's relationship with students. Using

Cooley's construct of a primary-secondary relationship continuum (1909), Americans expect a kindergarden or first grade teacher to have a primary relationship with his students, i.e., he should be intimate and have knowledge of the child's home life, father's occupation, number of siblings, etc. As the child progresses in school, his relationships with teachers moves steadily towards the secondary end of the continuum, reaching its lowest point near the second year of college. It then reverses again approaching a maximum at the primary end during advanced graduate work.

The Chinese model is quite different. The first grade teacher has an extreme form of a secondary relationship with his pupils possessing knowledge of the student's name and academic performance and little more. He should not be warm; rather, he should be extremely harsh, a style of behavior considered best by teacher and parents alike. Indeed, parents will criticize a teacher on the basis that he doesn't look "fierce" enough. The new principal who assumed the position during our study experienced some problems establishing her competency because she was a female. Villagers felt that no female could be quite as frightening to a child as a male and therefore, she would not be able to properly fulfill the principal's main function of discipline. The secondary relationship is maintained with almost all students throughout primary school although a few

of the better students will become "teacher's pets" and receive extra attention and tutoring. (Each year the best pupils receive scrolls to be displayed in their homes.) For further contrast, although not relevant in terms of village life, the high school teacher often establishes primary relations with his students to such an extent that his students will continue to send letters advising of their progress to one or two high school teachers and visit them periodically the rest of their lives.

Pre-school children have played together with little regard for sex although some games are sex related and some duties are sex related, i.e., boys copy father and girls, mother. As the children pass through school there is a gradual separation of sexes as girls become very shy and by graduation, talk or play very seldom with boys. Females will not reestablish a free and easy relationship with males until well after age 30. Although the primary schools are coeducational, most junior and senior high schools are distinct for each sex.

Young Adults

Graduation from grade school marks a significant step in the life cycle, often celebrated with a small party during which the graduation certificate is displayed in the *kung t'ing* and placed on the ancestral table to inform the ancestors.

The child can now assume a regular full-time job but girls have much better opportunities than boys for there are many clothing factories in the general area which employ girls as low-paid unskilled operators. Only a few boys are able to get jobs in factories or as apprentices. Additionally, since most of the farm labor work for females is compensated on a piece-work basis while the bulk of that for males is on a daily rate, girls have another advantage over boys because the payment on a piece-work basis is less risky because one only pays for results, not efforts. Since girls now produce more income than boys, many villagers remark, "Perhaps girls are worth more than boys!" (See Glossary C.)

Achievement of adult status is blurred; there is no real agreement in many cases. Marriage is nearly the only means for girls. Because of the increasing age at marriage and the fact that men are older at marriage and some never marry, it is possible for some boys to become men before marriage. There is not full agreement even on marriage although everyone agrees that parents are adults. People note when an individual earns enough to fully support himself and a boy rarely smokes before reaching this stage.

Boys and girls have little to do with each other. Boys pal around in intimate groups which often eventually become sworn brothers associations and in this way, a friendship relationship is institutionalized which is likely to last the rest of the boy's life. Girls too have intimate

groups but these are much less likely to continue after marriage. A girl is likely to establish a close relationship with no more than one or two other girls that may persist if their homes are not far apart after they are married.

Most of the money young adults earn is turned over to the family but a small allowance is usually retained and parents buy extras or furnish money for such things as clothes. Instead of asking for money, a young adult hints broadly for what he desires. (Even after marriage, if residence is in an extended household, the money is still likely to be controlled by parents.) It is the family's responsibility to save sufficient money for a boy's wedding and since the dowry of a girl from a "good" family will equal or exceed the bride price, the parents of girls too must save. In rare cases, it appears that girls are just sold at marriage with parents pocketing the entire bride price.

There is an occasional ceremony to mark a boy's sixteenth birthday which features food and worship with specialists. Since Taiwan now has universal military training, almost all boys are drafted for one to three years of military service. Families often hold a going-away party for the boy and quite a few villagers accompany the boy to the military bus in Hsin Tien where local officials make speeches. Since the pay in the service is only $100.00 per month, a boy's family often provides a subsidy and because of the low pay,

boys are not expected to marry until after completing service. This expectation has served to raise the average age of boys at marriage.

Marriage

Marriage has been discussed in Chapter V. To review briefly, there are a number of different ways to classify marriages. In terms of decision making, there are three types: 1) arranged, with parents fully in control of the decision; 2) veto, with parents making the initial arrangements but the bride and groom each possessing veto power; and 3) love, where everything is decided by the bride and groom. Historically, changes have occurred from a majority of arranged marriages to the veto type and more recently to the love although all three types appear to have always been present in Chinese society. Currently, each constitutes about one third of the marriages in the village. There is some difficulty in obtaining accurate assessments of the frequency of each type because there is an attempt to disguise others as if they were the arranged form which carries the highest prestige.

In its ideal form, an arranged marriage is achieved through a process of negotiation between the two families through a matchmaker and the couple do not meet until the wedding day. Even at the engagement, the groom's mother goes to the bride's house and puts the engagement rings on the prospective bride's finger.

In the veto form, the prospective groom accompanies his parents and the matchmaker to the girl's house and while the adults chat and the girl serves tea and cookies, the boy and girl look each other over or alternatively, they may attend the same affair in separate groups such as a movie while negotiations are in process. Each then has the right to say no but this is rarely so boldly stated. Examples of veto statements include such as, "He doesn't look very strong." "Doesn't he look sickly?" "She looks like she might have expensive tastes." Acceptance statements are, "You know best." "Whatever you think." (See Glossary C.) One recently married village boy vetoed five girls before getting married but now claims to have a fully-arranged marriage. Another claims the same, stating he and his bride first met at the wedding, although both grew up in the same village which had a total population under 400 and both were on the same tag-ball team in school.

Finally, after a couple make a love match, they often go through the whole process of negotiations with a matchmaker as if the proposal was not a foregone conclusion. Love matches are extremely common among older couples or the remarriage of widowers or widows.

In terms of residence after marriage, there are three major forms: patrilocal, matrilocal, and neolocal. Patrilocal is most common and still carries the highest prestige. As discussed in Chapter V, matrilocal marriages are more frequent in Sanlei than in Taiwan as a whole. Neolocal

marriages are most often of the love type. There is difficulty in assigning individual cases to a type of standard residence categories. For example, in one form of marriage, siaosiv, the girl is adopted as a baby and the future spouses are raised as brother and sister so that when the marriage occurs there is no change of residence for either. The original adoption can not be classified as part of the marriage for at the time of the adoption, the completion of the marriage is not certain. The girl may yet be married out in the same way as a natural daughter.

Another problem influencing the classification of residence is related to the time the census is made. There are such limited quantities of land that a son may get a job in town while his father works the farm. His marriage is celebrated in his father's house in the village but he and his wife, who may continue working, establish residence near his job (neolocal). However, when his wife has a child or when his father starts to become feeble, he returns to the village and takes over the farm, living in his father's house (patrilocal). Another example of a problem in classification which depends on the time of the census may be found in the case of an adopted-in husband (matrilocal) who may later establish his own home (neolocal).

Another means of classifying marriages is on the basis of the origins of spouses. Aside from the adopted daughter, there is a strong preference for village exogamy

and a lesser preference for li exogamy. Villagers are valued much more than the town people who are said to be lazy and who probably possess expensive tastes. Most couples were both raised in the area around Hsin Tien although brides brought in from down island carry high prestige.

Although marriages between people with the same surname are legal and villagers are aware of examples in town, they do not occur in the area around Sanlei. An interesting unconscious patterning was revealed by the fact that on every occasion when the possibility was discussed, someone made the same remark, "That's just like the pigs!" (See Glossary C.) There is a shared belief that pigs are dirty and have no morals.

There are two other types of surname exogamy. Some surnames are said to be both descendants of the same ancestor and therefore should not marry, for example Liao and Chien, although a violation of this rule is not as serious as would be the marriage of two people with the identical name. There was an example in the village and although the marriage had lasted many years, there was still much gossip about it for some people considered it a form of incest. Finally, two lineages may have had a fight and pledged that their descendants will never intermarry. This does not mean the proscription is for everyone with these surnames but only for the descendants of the pledgers who possess their surnames. There were three such pairs known to villagers

who regarded the proscription as binding although no one could remember the story of the fight which caused the pledge to be promulgated.

Gallin has discussed the significance of matrilateral and affinal relationships in a Taiwanese village (1960) in a manner which is equally valid in Sanlei for such relatives are very important. In a dispute or when one has problems, affinal relatives are sources of support and they have important roles in weddings, funerals, etc. Any marriage then, is likely to establish permanent relationships between two families. Many an adopted-in husband is without a family at the time of marriage, i.e., originally his parents had few children and are both dead, because the absence of a family is a defect lowering the value of a man as a marriage prospect, thus promoting a chao fu marriage.

There are other personal and socioeconomic factors affecting the selection of marriage partners. For example, it is best if the boy's family is a little richer than the girl's. In Sanlei, there is a tendency for tea-processing families to intermarry in order to preserve requisite skills and knowledge within a limited group. Also, efforts are expended to make sure the bride and groom are about equal in terms of popularity, physical beauty, etc., as many people claim great differences are more likely to lead to divorce.

The ritual for a regular marriage is not unlike that described for other parts of Taiwan (Gallin, 1966; Wolf, 1965; Diamond, 1969). In brief, the matchmaker, usually a part-time occupation, completes the negotiations between the two families. A priest to ascertain ritual suitability may be consulted (See Chapter VII). There will usually be a bride price plus gifts totaling nearly $7,000.00 although the bride will bring a dowry which should equal the bride price but rarely does. There are periodic gifts to be exchanged between the two families with the total amount exchanged marking the status of the two families. The engagement ceremony is performed at the bride's house while the bride faces away from her family altar. The wedding, some months later, is at the groom's house where the bride is fetched by the groom's family and friends in the morning. Upon arriving, they first worship while facing the boy's family altar and then retire to the bedroom where they will remain for most of the next three days. During the day they receive guests, coming out only for elimination, a luncheon party for family intimates, and a huge dinner party that night. Guests at dinner bring a monetary gift to pay their share of the cost because before the invitation is extended, everyone is aware of the proper amount. Ten people sit at each rented table and the status of the boy's family is rated by counting the number of tables. After three days, the newlyweds will return to the bride's home for lunch and to report the wedding to her ancestors. The

wedding of an adopted-in husband is nearly the mirror image of this, the wedding feast held at the home of the bride.

Of course, many marriages are not this elaborate. In the case of a marriage between very poor people, many older people living alone, or if between a son and adopted daughter, there may be no marriage party or ritual recognition at all. Villagers refer to these kinds of marriage as "putting the shoes under the bed" (See Glossary C). The latter type is also common for remarriage after divorce or death of a spouse for there is some disapproval of a second marriage, but nevertheless, everyone agrees a man or woman with small children must remarry fairly quickly. Only people with older children regularly fail to remarry. In a divorce, children are expected to remain with the father or, if he was an adopted-in husband, shared between father and mother.

The remarriage of a widow with children is expected to be with an adopted-in husband. By bearing a child, a woman has been fully incorporated into her first husband's family who will therefore probably play a part in the selection of the second husband. The second husband agrees to provide financial support for her previous children and if she had had several (which would likely reduce her marriage prospects), one may be given in adoption to a second husband as a marriage inducement.

There is no long period of mourning holding up a remarriage. The day after the funeral of a miner killed in

Erhlei during our stay, the whole area was rife with gossip as to who her new husband would be. Since she had three children, one recently born, and could not continue alone, marriage would be expected as soon as a suitable suitor could be found, perhaps in a few weeks. Given the sex ratio, females have an advantage over males in obtaining a never-married spouse for a second partner and the overall shortage of women in the area has probably added to the elevation of their status.

Married Life

There is much less originally expected from a spouse after marriage than in America, i.e., only respect and a level of nurture but it appears that more is received. Villagers say, "If love and excitement come or if the two people enjoy talking together, that would be nice" (See Glossary C). Companionship may be provided by other members of the family, neighbors or for a man by his sworn brothers or for a woman by her age cohorts in the village; love could come from the same people and surely from the children. Of course, if two people live together intimately on a basis of respect and care, love nearly always comes and if it does not, it was never really necessary nor expected and the marriage can be a success in spite of the void.

The marriage usually starts in very strained circumstances for in a majority of the cases, the couple have little personal knowledge of each other, perhaps not even

meeting until the wedding day, and even many "love" marriages are between relative strangers. Yet, the first night should be witness to consummation. There are culturally provided mechanisms to ease the establishment of a relationship. On the wedding day, there have been many guests and activities allowing the newly-weds no time alone with each other and the first evening, the groom and bride are both a little high but neither is really drunk. Normally, a host will kan bei (bottoms up) with guests, one at a time, but a groom is permitted to use his best friends as proxies. A toast is normally in three parts: a salute with the glass, drinking it down, and another salute which demonstrates the glass is empty. The groom performs the first and last part with his male friends doing the drinking, but he and the bride both have a few drinks with the more important guests. When they enter the bedroom, they will be isolated for a three day period of adjustment, even their food will be left outside the door. They may use a chamber pot but many sneak out to use the toilet.

After this, further cultural provisions help ease the strain. For example, since married couples are not permitted to show public affection, they do not have to pretend affection; they do not have to pretend in public everything is wonderful in spite of the fact they have quarreled in private.

It is usually many years before a married couple walk together and stand close in public as when watching an

opera. A few older couples may hold hands in public at night if it is dark. Today, many young couples do things together that their parents would never have dared such as going to a movie together.

Terms of address between married couples are difficult for use of the given name or an affectionate name is improper and there is no appropriate term of address until after a child is born when teknonomy can be used. Before the birth of the first child, they just avoid addressing each other with a term. A woman often "follows her children" in using their terms for her husband's relatives. While a woman does have a term used for address and reference, "Kuan - ren" , which roughly translates as "lord and master," the term should not be interpreted as descriptive of the relationship. Like many terms, it has a meaning not directly based on its roots as illustrated by the fact that it is not too uncommon to hear a woman address her husband as follows, "Lord and Master! Go feed the pigs. Right now!"

Women have much control in the household. They very frequently control the household budget, doling out money to husbands as needed and even when the husband is fully in charge or where there is shared control, the woman still does much of the shopping for everyone agrees women can best bargain to obtain lower prices. In general, the longer the marriage lasts, the greater the amount of power the woman acquires. Of course, there are many exceptions. If she is

in a joint household, she usually does not take much part in money management or training for money management until about age 30 or more. In a few households, the man is extremely dominant.

Sex

Most brides and grooms are virgins. Today, several of the young men have previously visited houses of prostitution while in the service and many visited tea houses in Hsin Tien where they play with women but do not have intercourse. When the bride is not a virgin, she has usually only had relations with the boy she marries in a love match. Some of the girls who work in the factories have had illegitimate children arousing reluctance among some villagers about letting their girls go to work.

Even small children know a lot about sex for the village is rural and children observe the mating of farm animals and know the function. Given the sleeping arrangements and the proper site for sex, i.e., in a bed which will be shared with sleeping children, it is likely they have also observed human intercourse. I remember one occasion when the barber, a bachelor, was building a new three-room house because he planned on marriage. A group of 9 to 10 year olds were showing me around and when we came to the prospective bedroom, a boy said, "He is getting married and this is where he will stick it in her" (See Glossary C). Men and old women talk about enjoying sex when children are

a

be

co

the

dre

sti

inte

hous

ever

within hearing distance although someone will occasionally shush them. During the wedding party in front of all the guests and children too, the bride is given a flower to hold, the name of which has exactly the same sound as the common term for penis, for the purpose of helping to produce male offspring. Earthy remarks though resound softly throughout the audience such as, "Do you think it is too big?" "Have you ever squeezed one before?" or "That's not the only one you will get today" (See Glossary C).

Sexual intercourse is a natural function, to be enjoyed by men and women alike. It is recognized that there may be differences in a married pair's respective sexual appetites and an agreement that it is the responsibility of each to provide for the other. Male appetites are large at marriage but women usually take time to develop them, not reaching a peak until after age 30. Females are quite shy and rarely initiate sexual intercourse until married quite a while although there are exceptions.

Sexual intercourse is only properly performed in bed at night after dark, preferably at midnight, by a married couple who are seldom fully unclothed. The children sharing the bed should be asleep, checked by pinching them. Children learn to face away from the center of the bed and lie still for it is not proper for anyone to acknowledge that intercourse has taken place although with the crowded houses and the walls reaching neither floor nor ceiling, everyone can hear the creaking beds and distinctive sounds

of

ma

is

pl

s

v

e

d.

co

wh

fe

The

aff

her

of sex. Sexual foreplay includes nibbling, blowing, and manipulation of erogenous zones. The only common position is the classical "man on top." Intercourse continues while physically possible but the frequency declines with age.

There are a few women whose husbands are unable to satisfy them. Currently, there are three such women in the village who have assignations regularly with other village men, two with a regular partner, while the third is insatiable. People say her husband is impotent. If the latter woman has relationships with any reasonably happy married man, his wife gets very angry as has happened several times and once there was a hair-pulling and scratching fight. Illicit sex within the village is usually in the mountain fields and almost never in a village house.

Although men in some Taiwanese villages frequent the wine houses[4] in the city (Wolf, 1965), this characteristic is absent in Sanlei. One man in Erhlei is a habitue however and everyone knows about it but most of the criticism directed at him is not on a moral basis; rather, he is considered foolish for wasting his money. A few li girls who have become prostitutes in town return for visits and festivals but do not practice their trade in the village. They are not morally condemned and are welcomed at all li affairs.

Old methods of birth control included the use of herbal solutions by women and coitus interruptus by men

neither of which was extremely effective. Recently, there has been much use of "Inter-Uterine Devices" for they prove fairly effective and only a few women experience difficulties with them. Although available at a public health clinic in Hsin Tien, village women prefer a much more expensive private hospital. Women alone decide when they will use an I.U.D. although their husbands may put up a vigorous argument. Only rarely will a woman use the I.U.D. before she has borne three children although if she does decide earlier, no one can do anything about it. Older people, men and women alike, often say the young women are lazy today, they cannot be bothered with many babies. In fact, a major reason for many babies was the high death rate and thus, the necessity for many to assure raising some to maturity, but with the increasing life expectancy and improved diet and health care, the odds of success have significantly changed.

Birthdays

After the first birthday, the next birthday of any importance which is celebrated with a party is the thirtieth although others may be recognized in the family with special food such as an egg. The thirtieth is for a married male with children and given by his wife's parents while the reverse is less frequently provided for a woman by her husband's family. In either case, it is a small party but with rich food. Most birthdays continue unrecognized, but

when they are celebrated, there is usually greater emphasis for those of a man. After the thirtieth, every tenth year will be celebrated in special ways as a ta sheng jih (big birthday).

The first big birthday party is at age 60,[5] called hsia shou (small longevity). As described in Chapter IX, the Chinese calendar has a cycle of 60 years. When one reaches age 60, he has completed an entire cycle and is starting over again so that every year after 60 is considered to be a gift of the gods. At age sixty, a man is expected to turn over control of the family to his sons and live as if on a pension but still contributing limited amounts of labor. Of course, there is often a disparity between chronological age and the level of physiological aging. Some men withdraw happily while others resist, but a son should not press a reluctant father very hard. There will be a big sixtieth birthday party with many guests who each present a red envelope gift which contains an even amount of money sufficient to more than pay his share of the cost of the party. Local politicians will send cards of congratulations. A man without grandchildren will not have a big party and there will only be a family affair without many guests for a woman reaching sixty whether she has many grandchildren or not.

Old age[6] tends to be a pleasant period of life in the village. The aged have a lot of leisure and yet enjoy

great quantities of respect. Rules for behavior are greatly relaxed and many can now do things younger people are not permitted. Old women attend meetings which are normally for males and some smoke for enjoyment only while women under 60 who smoke make an excuse that it is necessary for a particular affliction, "an itchy nose." Old women are the ones who talk "dirty" and act as the village clowns and teasers. Up to age 35, females tend to be extremely shy in public but once past 60, they are the most aggressive. I was sitting in front of the village store in a group one day while four young married girls were washing clothes across the street in a bent-over position. A woman of 80 nudged me and in a loud voice exclaimed, "That girl over there is waving it at you. Go over and stick her!" She and the other old women laughed loudly as several men smiled or snickered but the girls blushed deeply (as I did) and pretended we were not there. When an old woman in a social group clears her throat preparing to speak, others stop talking and listen intently, expecting to be amused.

If the first digit is even for the tenth year birthday, the occasion is more important.[7] The 70th birthday is recognized and has a special name of chung shou (middle longevity). Cards will be sent and there will be a family party but not many guests come. On the other hand, the eightieth birthday, shang shou (high longevity), is the next big occasion, but for males and females alike. In addition to the big party and monetary gifts, cards will

come from all over the island. An interview will be recorded in the local newspaper, the provincial governor and other important officials send small scrolls and even Chiang Kai-shek himself sends a scroll of congratulations which will proudly be displayed on the wall in the kung t'ing.

The 90th, chi shou (senior longevity) is rather an echo of the 70th but will be reported in the newspapers. No one in the village area had been known to reach one hundred but there were hopes for a man over 90 in Erhlei. There was believed to be a special name for the hundredth birthday but no one could recall it although several felt the term had something to do with eating. My questions stimulated much speculation about what gifts and recognition a hundred-year old would receive. One man suggested the gifts would probably include a letter from the head of the United States and several people nodded in agreement.

Recreation

The most important form of recreation was conversation which took significant portions of every day, particularly the evenings between dinner and bed-time. Almost any topic was open with gossip about others endemic for everyone knew each other's business. When anyone waited at the bus, every person who passed by asked, "Where are you going? What are you going to do?" When returning on the bus, similar questions were heard, "Where have you been? What did you do?" With a purchase, the question is "What did you buy

an
s
C
l

c
f
f
,
a
c
f
l
i
i

f
e
m
l
c
or
tu
is
en
de

and how much was it?" No matter what the price, the constant response was, "I could get it cheaper!" (See Glossary C). There are few secrets inside the village, but the villagers united against outsiders.

Games requiring physical exertion are played by children only. There is only one organized game with rules, the tag ball played in school. Children's games are similar to what would be called "free play" in American schools. There are few toys and most of these are home made. Among adults, only men play games and these are sedentary games of skill such as a card game or chess. There will be chess games a couple of times per week but there are usually more kibitzers than participants. Mah Jong is illegal but there is a game about once or twice a month among the Mainlanders in the area.

Religious and life cycle events are colorful affairs which are interesting to observe. For many such events, entertainers are hired such as the crew of 15 or more required to present a Taiwan Hsi (opera) which may last eight or ten hours. Cheaper entertainment might include a puppet show, juggler, sword dancers, etc. About once a month or so, a sales crew puts on a show which features songs, dances, and jokes to draw customers. The show is punctuated by the entertainers passing through the audience selling medicine and since the length of the show is determined by the amount sold, some people buy in order to

prolong the show rather than because they are convinced of the efficacy of the medicine. Every evening people gather to watch the television set which faces the street at the front of one of the village stores as the storekeeper sells soft drinks and ices. Finally, nearly every home has a radio which blares loudly from early in the morning to late at night. Although farmers listen to a few reports on weather and the occasional news report, the usual program features Taiwanese opera or some of the new popular music featuring singers with guitars which is preferred by young people.

Occasionally, trips are made to a cheap movie house in Hsin Tien by middle-aged women in groups of 4 or 5 for a matinee or unmarried young people in groups which are separated according to sex. There is some dating but the boy and girl must sneak off and meet in town. Some young married couples now go to the show together but this is a new trait and still partially condemned by older people. Also, people leave the village for recreation in the parks and to see sights such as the zoo. However, most people getting on the bus alone are usually going shopping or on business and most family groups are usually going to visit relatives. Relatives, friends, and former residents often come to the village to visit. Some middle-aged village men occasionally visit a small restaurant in a nearby village to chat, drink cheap wine, eat light snacks, and play word

games and a gambling game something like paper, rock, and scissors.

Middle-aged married people, without their children, go for a two to five day sightseeing tour on a bus, a unique form of recreation started by the Japanese. Two men from Erhlei organize a trip once every eight or nine months for forty people or so, all from Talei Li. The trip is not very expensive and everyone seems to have a good time and later, talks about the trips for years.

Dinner and drinking parties are also important and being a host is both enjoyable and establishes one's social position. Men play drinking games at dinners because one never drinks without also eating. During a dinner, one can not drink alone; he must find someone to drink with. Toasts in the previously described manner are kan bei (bottoms up), ban bei (half the glass), or swei bien (as much as you like). A goal of the drinking game is to stay sober while getting others drunk for to become drunk is to lose face. People become very skilled at the drinking games based on a strategy that when your glass is near empty, you should get a man with a full glass to kan bei (bottoms up) in the hope to have him drink much while you drink little. He should, in this situation, try to get the toast to be swei bien (as much as you like).

Death and Beyond

Death and burial have often been described for Chinese communities (Gallin, 1966:219-30; Fei, 1939:75-9; M. Yang, 1945:86-90; C. K. Yang, 1967:28-53). Although there are regional differences, significant elements are reasonably similar in Sanlei and due to limited space, the below account will not be detailed nor elaborate. Instead, remarks are restricted to particular local variations not adequately described in the literature or to those which bear directly on the problem focus of the paper. The reader is referred to the literature for more complete accounts.

Death ritual varies in accordance with age, sex, marital situation, the number of descendants, and the financial status of the family. In general, the greater the wealth, age, and/or number of descendants, the larger and more elaborate the ceremony. As already stated, death before reaching the first thirty days of age is not ritualized at all and the death of a child at any age is seldom accompanied by any ceremony. There is considerable resentment directed against a male who lived some years but died before producing offspring for villagers claim he has cheated his parents by failing to repay their investment in him with grandchildren. There is no corresponding attitude toward the early death of females unless they have only a few siblings, none of whom are males, and in this case, the resentment is related to the fact that there were plans for an

adopted-in husband marriage which was supposed to produce children but which will now be impossible.

Regular funerals are usually held only for married people with children[8] and the kind of ceremony held does furnish a clue to the relative status of males and females. In similar social positions, the ceremony for a male will be more elaborate than that for a female. In a single household however, it is likely that the ceremony for a married-in female who has borne several children will be much more elaborate than that for her husband's unmarried male brother although both died at the same age. This fact does support my contention that the woman with children is fully incorporated into her husband's chia. The bulk of the most elaborate funerals ever witnessed in the village area are those of females but this is not due to a preference for females but only due to the fact that women tend to outlive men. The oldest people are usually females and as stated, the more descendants a person has, the larger the funeral ceremony.

There are significant differences relating to natural death versus accidental death. Natural death is the result of old age or disease while accidental death involves violence such as a fall or a mine cave in. Natural death is celebrated in the kung t'ing and if it looks like someone is about to die, he is moved to the kung t'ing to await death. On the other hand, a body of an individual who had an accidental death may not be brought into the kung t'ing or any

other part of the house and the funeral must be celebrated in the courtyard outside the house.

An accidental death always generates much additional fear in the village area for it is said that the spirit of a man who dies in violence is very angry and will always take another person with him for company, i.e., someone else in the village will quickly die after an accidental death. There was one miner killed in a mine cave-in during our stay in the village and his body remained out in the courtyard. Although villagers prefer internment within two days at the most, his body lay out three days because the government insurance inspectors who had to view his body before releasing the insurance proceeds were delayed. Before the funeral was over, indeed, in the midst of the ceremony, a small child in the village died of pneumonia. Everyone agreed that the death was due to the spirit of the dead miner and although saddened by the death of the baby, everyone was greatly relieved for the danger was now over as the spirit's need for a victim was sated.

There is a public cemetery started by the Japanese in the Wulei area which permits free burials for Talei Li residents and charges $25.00 for outsiders. About seven years after burial, if there are descendants, the body is exhumed and a specialist puts the bones in a special ceramic pot in the proper order as if the individual were in an upright position. This pot is then placed in a good location

in Sanlei Ts'un, one which possess good feng shui coordinates. A few bodies are placed directly after death in family burial plots but this is relatively rare. More often, if the family owns a burial plot with elaborate accoutrements, the body is first buried in the Wulei cemetery, exhumed after seven years as described, and the pot of bones is then placed in the family site rather than in an individual unique location.

Following the funeral, worship of the individual is directed towards a special side-wall table for the first twelve months. At the end of the year, the tablet, if any, and worship and objects are transferred to the regular ancestral table. The period following death is still considered a part of the normal life cycle for even though he is dead, the individual may continue to influence village affairs. He will probably be worshipped separately on his death anniversary for a number of years, the length of time varying in accordance with his age at death and the family status.

Eventually, worship directed towards an individual will be merged with that for the other ancestors and rather than on his own death anniversary, he will be worshipped on the regular days set aside for all ancestors in general. As the generations pass, memory of him will gradually be lost, and by the fifth descending generation, little more than his name will likely be left in the memory of villagers.

CHAPTER IX

CYCLES IN TIME

Time is subdivided into many different categories which play a significant part in structuring social life in Sanlei Ts'un. For certain kinds of divisions, adherence to which of two conflicting systems for reckoning time provides a key to evaluating the level of modernization achieved by an individual. For example, years are subdivided according to both a traditional lunar calendar and a modern Western solar calendar. Although farmers place prime emphasis on the lunar calendar, businessmen and urban dwellers rely on the solar calendar and both calendars are important for determining village activities.[1]

Another relationship between the level of modernization and the type of time system employed may be seen in the new emphasis on clocks. Clocks were unimportant in rural traditional Chinese villages and according to older informants, Sanlei Ts'un had no clocks when they were children. As late as 1950, there were still only a few clocks in the village. Currently, almost every village house has a clock and an electric clock in the kung t'ing has almost become a necessary status symbol in spite of the fact no member of

the household pays any attention to its time. Punctuality according to a clock is important for miners, factory workers, and those who work in town. For other villagers, only the bus and the school operate according to time scheduled by a clock but even then, the school bell and bus passage through the village ten minutes before leaving for town make the clock unnecessary.

The traditional Chinese conception of the passage of time in general is that time movement is cyclical. That is, time proceeds as if it were traveling down a corkscrew. Whatever is happening has happened before in the past and will happen again in the future. I have employed the analogy of a corkscrew rather than a closed circle because of the recognition that although events are individually unique, the general patterns are repeated.

In addition to this contrast with the American view of time as if it were passing along a straight line into infinity, there is a comparative long-range approach in opposition to the American short-range approach. Illiterate villagers are aware of events which occurred hundreds of years ago or at least an idealized reconstruction of the events and the memory of the events remain important factors in decision processes in the village. For example, some village family lines were said to have originated in Honan, emigrated to Fukien 500 years ago, and then to Taiwan 130 years ago. Other village family lines with the same surname

were said to have originated in Fukien and also emigrated to Taiwan 130 years ago. Villagers carefully distinguish between the two lines. A member of a Honan-originated line can list all other lines in the area which also supposedly originated in Honan and most claim that those who came from Honan are more like each other than outsiders although I believe it to be nearly impossible for an outsider to detect any differences.

The biggest subdivisions of time are labled according to dynasties. A sequence of calendar years starts over again at the beginning of each new dynasty. Since the last dynasty was overthrown in 1911 when the Republic was established, years have been numbered in sequence since 1911 as year 1 in a manner similar to this traditional pattern. Within dynasties, there were also occasional references to the reign of particular emperors as a means for dating events, i.e., in the 16th year of the reign of the Emperor K'ang Hsi. No comparable phenomena is observed for the most recent period although this lack may be related to the relatively short perspective or to the dominance of Chiang Kai-shek and Mao Tse-tung for such a long period in their respective spheres of influence.

The Sixty-Year Cycle (Chia Tzu)[2]

There is a system for naming years to be discussed below which generates sixty different terms and thus, a sixty year cycle. At the end of a sixty-year period, the

sequence is repeated. Completion of life through the entire cycle is a primary factor supporting the stress on the sixtieth birthday for any person who lives longer than a full cycle is considered to have been necessarily favored by the gods. This belief in god's favor applies to males and females alike. The sixty-year cycle results from the interaction between three sets of factors which are each a complex religious concept with exceedingly intricate complexities and ramifications. Although each will be discussed briefly below in turn, it must be realized that little more than a cursory examination is offered.

The first set is related to the Chinese view of the world as if it were bipolar for not only does everything have its opposite, opposites are both necessary and complementary to each other. "These opposites tended to merge into each other and even to become each the opposite of its former self" (Thompson, 1969:3). One of these principles, yang, stands for activity, light, heat, dryness, hardness, and masculinity; the opposite, yin, for quiescence, cold, darkness, humidity, softness, and femininity (Bodde, 1951: 21).

The eternal interaction of the above two general principles, the yin and the yang, produce the wu hsing (five primary elements): fire, water, earth, wood, and metal (Bodde, 1951:21-2). The Chinese word hsing, which sinologues have usually translated as element, is actually a

verb meaning to walk, to go, to act and therefore, perhaps better translations of wu hsing might be the "five operational qualities" (Thompson, 1969:4) or the "five movers" or "five agents" (Carroll, 1963:8). Correlated with the five elements are a number of other five-members sets such as directions, notes, colors, tastes, odors, sacrifices, organs, etc. The five elements produce the t'ien kan (ten celestial stems), a yin and yang form of each element. It has been suggested that perhaps the ten celestial stems were once employed for counting the days of a ten-day week (Carroll, 1963:12), but if true, the knowledge has been lost in Sanlei Ts'un.

The third set of important categories are the ti chih (twelve terrestrial branches). There are also many correlations with the twelve branches and a number of twelve-member sets such as the compass points, tones of a quasichromatic scale, etc. (Carroll, 1963:13). However, the most popular correlation is with the twelve animals, in order: Rat, Ox, Tiger, Rabbit, Dragon, Snake, Horse, Sheep, Monkey, Cock, Dog, and Pig. The odd-numbered items are considered to be yang and the even-numbered, yin.

"The chia-tsu cycle of sixty terms is made up by combining the stems and branches so that each of the yang (odd-numbered) stems occurs once with each of the yang branches and each of the yin (even-numbered) stems occurs once with each of the yin branches" (Carroll, 1963:16).

Every adult in the village could name the branch and stem of the current year and most could immediately predict both for the following year. When asked to predict some year farther into the future, most adults could satisfactorily figure them out. The question usually produced a response set which featured recitation of a sequence while counting on the fingers. The two cycles of five and twelve were figured separately and then combined by adjusting the yin or yang form of the stem to agree with the branch in order to produce the name of the year.

Every villager, with the exception of very small children, knew the animal (branch) associated with his birth and almost everyone also knew the stem (element). Older people were often not sure of either their ages or the year in which they were born, but their approximate age plus the name of the animal associated with their year of birth always allowed accurate discovery. When we later obtained official records, there were only a few discrepancies between the recorded age and the age computed by use of the animals. Each discrepancy could be explained with a story which claimed the official records were not correct. For example, one Sanlei man had been registered two years later than his actual birth because his father was with the bandits in the mountains. In each case, the "animal" designation was correct and the official registration was inaccurate.

There are similar pairs of two characters specifying the month, day, and hour of one's birth. The eight characters, pa tsu, thereby produced are employed in determining compatibility or incompatibility of persons about to be married,[3] and are also used in fortune-telling. However, most people in the village could not immediately recall their own eight characters although most said they could be figured out.

Calendars

There are two important calendars which function simultaneously in the village. The first is the standard Western calendar with which all readers are familiar. It has become more important in the past few years, especially for those employed in modern firms because work schedules and payrolls are based on the Western solar calendar. The only major events in the village area which are determined by this calendar are the national holidays such as Restoration Day, Independence Day, and Chiang Kai-shek's Birthday. Meetings of government agencies and dates for paying taxes are set according to this calendar too.

The second calendar, the lunar, is the traditional form and is employed to determine the traditional religious holidays. Individual months are of 29 or 30 days duration, intermixed so that each new moon falls on the first day of a month. Months are simply numbered from one to twelve. Years are of unequal length, having either twelve or

thirteen months according to the year's position in a nineteen-year intercalation cycle (Carroll, 1963:4-5). The extra month is assigned the same number as the month immediately preceding it. Villagers would say, for example, that 1966 had two "third" months. Although religious holidays based on a monthly cycle would be celebrated during the extra month, those based on a yearly cycle would only be celebrated during the first of the duplicated months.

Because of the differing length of the months and the differing number of months in any one year, the lunar and solar calendars do not match. Lunar New Year commences sometime in January or February of the solar calendar. Without exception, villagers were all aware of the current date at any moment in time according to the lunar calendar. On the other hand, most villagers were not aware of the current date according to the solar calendar. The awareness of solar dates was related to structural factors. As would be expected, those who worked in businesses or factories as well as those who did business regularly in the city were more knowledgable and therefore, on the average, men were more aware of both kinds of dates than women.

The Yearly Religious Cycle

In traditional China, there was no custom of a five-day or six-day week followed by one or two days for rest and recreation. Nevertheless, an equivalent relief period was provided by the celebration of various religious

festivals which punctuated the yearly cycle; these served as a functional alternative by special interspersing recreation days in the work schedule. Most of the special days were regularly scheduled, some on a yearly basis and some on a monthly basis. As previously described, some were specially scheduled in addition such as that for the Fire Purification Ceremony. Each of the major events in Sanlei's cycle will be discussed briefly below with dates indicated in accordance with the lunar calendar.[4] The particular events and/or the dates for their celebration vary for different regions of China, but nevertheless, the overall frequency appears to be about the same everywhere.

The listed items are not all of equal importance. For some, the activities might be restricted to a few hours in the evening and involve only the household members and even then, in only a minority of village homes. For others, the activities may last several days, involve many guests, and include 100% village participation. In general, most holidays always involve extra worship activities and special food in the evening at dinner. The presence of guests is nearly always evident for the more important affairs.

The year starts with the Hsin Nien (New Year's) celebration on the first day of the first month. This is the most important festival in the yearly cycle and the whole li cooperates in its celebration. Entertainment is always hired and usually retained for a full three days. Actually,

the preparations start several days before New Year's Day and extend several days beyond encompassing many parties and celebrations. Gifts are received from employers and gifts are provided to all regular vendors with whom an individual does business. There is a considerable amount of visiting with friends and relatives in the village and in the surrounding area as far as Taipei. Inscriptions are placed on the doors and New Year's evening itself is enlivened by firecrackers all night long. Virtually 100% of villagers participate in the various celebrations.

The New Year Season closes with the celebration of Shang-yuan (Lantern Festival) on the first month, fifteenth day. In addition to the elaborate food, worship, and firecrackers there is parading in the evening while carrying colorful lanterns which have candles inside. This affair is most popular with children. Villagers believe that a single girl may learn something about her future husband and whether she will get married during the current year by interpreting the first thing she hears after setting out on the parade with a lantern. Children are able to obtain good luck for an entire year by stealing vegetables growing in the fields without getting caught. Village adults rush about and loudly complain about thieves but are careful not to catch any children stealing. Most village families participate in Shang-yuan; the only exceptions are households without children.

Ch'ing Ming Chieh (Clear and Bright) is celebrated during the third month sometime between the first and fifteenth.[5] The primary worship is of gods and ancestors with an important task of cleaning and decorating ancestral graves. At this festival, many kinship units larger than a single family gather to worship together and clean the common graves. Most people prepare and serve special cakes. Almost every household in the area participates with the exceptions made up of a few immigrants who do not have a family burial plot in the area. The day before Ch'ing Ming Chieh, about one third of the households build no fires and therefore, eat only cold food in remembrance, villagers say, of an event during the period of the "Warring States." On the day of Ch'ing Ming Chieh itself, many villagers who have migrated permanently to the city return to Sanlei Ts'un for worship and celebration.

The second most important yearly event in Sanlei is the Matsu procession which occurs on the fifteenth day of the fourth month and as previously stated, is the only religious affair for which cooperative activities extend beyond the confines of Talei Li. Beyond the li boundaries, the cooperation in the touring entertainment and god's procession lasts only one day, but inside Talei Li as well as inside several other li in the Hsin Tien area, the celebration usually lasts three days. There are usually elaborate hired entertainment programs such as an opera, many dinners

and parties, and the visitation of many guests from outside the village area. Although legend claims that Matsu had special powers over boats and weather and special relationships with fishermen, today her powers are considered to be most general. Village women now make special worship offerings to her with reference to pregnancy, childbirth, and the care of children.

There are special meanings connected with many repeated words in the Chinese language.[6] For holidays, the day of the month which is the same number as the month itself has special powers. The next festival of importance in the village is of this type, the Dragon Boat Festival, which occurs on the fifth day of the fifth month and is often called the Double Fifth. In addition to the usual activities, there is a special food, glutinous rice wrapped in a leaf, and doors are decorated with branches and leaves. An afternoon bath[7] is supposed to help keep one healthy for the entire next year. There are boat races in town as part of the festival but only a few unmarried young people from the village go to observe them.

On the fifteenth day of the seventh month is Chung Yuan (Festival of the Hungry Ghosts) especially set aside for the worship of the Hao Hsiung-ti (Good Brothers, an euphemism for unworshipped ancestors) although some worship of the Good Brothers occurs periodically all during the year. All ancestors are worshipped, both the personal

known and unknown ones as well as ancestors in general and any ghosts who happen to be wandering around. There is a common Chinese belief that any unworshipped souls may cause much mischief. In Talei Li, it is felt that there are more hungry ghosts today than ever in history because of the many Mainland soldiers who are now slowly dying off without leaving descendants to carry on their worship. Once again, food sacrifices are very important with pork and fruit featured in particular. Some food is left out over night on the street so that any passing ghost may serve himself.

The Moon Festival or Mid-Autumn Festival falls on the fifteenth day of the eighth month as does the birthday of T'u Ti Kung (the Earth God). As part of the worship affairs in the afternoon before dinner, about sixty per cent of village households offer sacrifices at the small Earth God Temple at the edge of the village. There are also special sacrifices to Tai-yin (Goddess of the Moon) and the majority of the villagers stay up late at night to observe the moon for legend claims that the moon is more beautiful this night than during any other time of the year. Special yueh ping (moon cakes) are sacrificed and given to friends and relatives as gifts. The Moon Festival is a yin event (the female end of the yin-yang dichotomy previously discussed) and therefore, features special activities by women in order that they may conceive, obtain a husband, or receive long life. In Talei Li, gifts are also sent on this day to

the li school teachers. In spite of the fact that moon cakes and the festival are yin, some moon cakes are sacrificed to T'u Ti Kung who is a male and therefore yang.

The second of the double number festivals is the Double Ninth, the ninth day of the ninth month. Since this is a yang holiday, the counterpart of the above for the yang or male part of the yin-yang,[8] it is often also termed the Double Yang. On Double Ninth, men like to have many guests for dinner with a tendency to prefer male guests only, so many of the Sworn Brother Associations schedule one of their regular yearly banquets. Young people in the area climb to the top of the small surrounding mountains (foothills might be more descriptive) and try to run all the way down without falling. Since this is difficult, the sight of the clumsy falls provokes much laughter in the village.

Tung Chieh (Winter Solstice) falls during the eleventh month, the day varying with the calendar cycles. Once again, there are the typical sacrifices and worship plus a special food, winter dumplings. In Sanlei, the farmers sacrifice dumplings all over the village, leaving some out in the fields and attaching some to each of the pig pens. Most farmers worship also at the temple of T'u Ti Kung.

The New Year festivities commence on the twenty-fourth day of the twelfth month with a ceremony to send off the gods. Earthly gods ascend to heaven to report and will not

return until after New Year although part of their responsibilities are borne by Heavenly gods who come down to serve as substitutes. Because the substitutes are not as conscientious in maintaining their vigils and reporting misdeeds, many activities not normally permitted are carried out during the absence of the regular gods, i.e., the house is thoroughly cleaned and many marriages are consummated, especially those that might be of questionable value as for instance, with an adopted daughter or between two people with surnames who should not marry. The gods are sent off with special ceremonies and will be welcomed back with another set of ceremonies on the fourth day of the first month. A household distributes New Year cakes to friends and to anyone who has not experienced a death in the family during the year.

For most of the above events, although details vary, worship activities include food sacrifices, fire crackers, and the burning of paper money. Worship activities always are held in the kung t'ing of the family home or in the courtyard immediately outside. Frequently there is worship as well in the Sanlei temple and the T'u Ti Kung temple and less often in the li temple in Erhlei. Where possible, there should be dinner parties with guests. Since everyone in the area is usually celebrating the calendric holidays on the same day, guests are difficult to obtain. Some migrants come back from the city to participate and poorer

villagers eat at the homes of richer villagers.

Most villagers claim that men are responsible for carrying out the worship activities connected with religion and also for arranging the events. On the other hand, in another breath, the same villagers will say that the responsibility is borne by the head of the household. There is an implied assumption that the terms man and head-of-household are nearly synonymous but as pointed out previously, many heads of households are females in Sanlei Ts'un. From an observational point of view, there is little doubt that women are prime organizing forces in planning the celebrations. Ordinarily, for the very minor occasions, they do much of the actual worship itself but on one of the special days described above, when the family and guests gather to watch a worship activity, an older man will perform if one is available in the family. If one is not available, a woman will worship. The family identification is more important than the sex for on several occasions I observed women performing the worship activity although there were old men present as guests who were not members of the family. On the most important days, those with worship activities at the village and li temples, there will always be some women observed among the celebrants. They are well accepted and will evoke no disparaging remarks as long as they have no man in the family who should be assuming the responsibility.

The above events serve to break up the year. Moreover, the period of the year when the required agricultural activities are at a minimum, from the middle of the twelfth month to the middle of the first, is witness to the most festive period which commences with the last monthly-cycled event of the year and ends with the first monthly-cycled event of the new year (see next section).

There are also the national holidays which are scheduled according to a calendar, but in this case the western calendar. These are not as important in the village as the religious affairs but are growing in importance as time passes and there is a greater degree of urban contact and more individuals start working in factory, business, and mining occupations. Businesses tend to close for the important events and thus, the workers remain home. There are usually parades and decorations in the cities and many of the younger people go off to observe. The major events are Double Tenth (the establishment of the Republic), President Chiang Kai-shek's Birthday, the Birthday of Confucius, and Restoration Day (the return of control over Taiwan to the Republic of China).

The Monthly Religious Cycle

In accordance with the lunar calendar, there are two pairs of worship days each month devoted to gods, ancestors, and the Good Brothers which also serve to punctuate the calendar with religious events. One pair falls on the first

and fifteenth and the other, on the second and sixteenth. Some villagers claim the first pair is for gods, soldiers, and their horses and the second, for the Good Brothers but there is much disagreement over this contention. There is agreement that the first pair is primarily for worship by farmers and the second, for worship by businessmen. Most village households worship on one pair of days or the other but no household worships on all four days in any one month. If a household worships on the first day of the pair, it always worships again on its corresponding mate, i.e., if worship is made on the first day of the month, there will be worship again on the fifteenth, but not worship on the second or sixteenth, etc. However, a few households alternate the pair of holidays each month. For example, the Liao Chin-wei family who operate both a farm and a store worship on the first and the fifteenth of one month and on the second and sixteenth of the next.

In the past, most Sanlei families tended to worship on the first and fifteenth but currently, there is an increase in worship on the second and sixteenth accompanying the growing importance of business and mining. In the clothing factories, the owners provide the workers with a free lunch on the second and sixteenth of each lunar month as part of the ritual worship activities even though the factory itself is operating in terms of the solar calendar. Presently, over eighty-five per cent of the households in

Sanlei worship on one or the other pair of days regularly.

The worship activities on these days do not seriously interfere with the normal work activities but most farmers usually quit work a little early. The family will have a big dinner with rich food although guests are extremely rare. After dinner, there is a longer leisure time in the evening as compared with a normal day and instead of performing any constructive tasks, almost everyone just sits and chats.

The first of the monthly-cycled days of the year (the fifteenth day of the first month) and the last of the monthly-cycled days (the sixteenth day of the twelfth month) are major holidays.

The Weekly Cycle

The growing importance of the week of seven days, Sunday in particular, is strong evidence of Westernization in Taiwan and its penetration into Sanlei Ts'un. There was a traditional ten-day week in China but few living villagers were aware of its details or operation. Almost every villager could quickly name the current day of the week according to the Western calendar when asked. Although there were no Christians in Talei Li according to villagers, Sunday has become a special day with greatly reduced productive work activities. This is related to the fact that many business places are now closed on Sundays so the workers who live in the village stay home while many residents in the city

come to the village to visit. Villagers, in turn, visit relatives who live in the city more often on Sunday than any other day.

There were a number of different factors contributing to the institutionalization of the Western week. The li school, in accordance with national directives, operated full days Monday through Friday and a half day on Saturday with Sunday, a school holiday. Several of the mines were closed on Sunday as were all but one of the factories where villagers were employed. Many of the businesses and stores in town and city were also closed on Sunday. Thus, Sunday has become a day of rest and few farmers now work a full day on Sunday. Except during the busiest season, there are few labor exchanges on Sunday and few farm workers are hired on Sunday. Most farmers who do work on Sunday are only working on their own fields.

Village young people often go off to town on Sunday, to the parks, the theaters, the zoo, and merely to walk around and see things. Where boys do meet girls for the secret dates which would be disapproved by parents and village elders, they are usually arranged for Sunday afternoons when both are most likely to have available leisure time. As previously stated, migrants to the city often come back to the village for visits on Sunday and more recently, villagers are going to the city to visit relatives and friends now living there.

The Function of Religious Holidays

There have been innumerable anthropological accounts of the significance of religion and religious events in community life in such areas as intensification of normative standards, promotion of community solidarity, etc. Often seemingly overlooked are the effects of religious holidays in promoting work efficiency. Ever since the Hawthorne studies in the United States in the 1930's (Landeberger, 1958), industrial engineers and sociologists have recognized the importance of work breaks, short periods and full days alike, in increasing output. Although breaks seemingly mean a loss of gainfully employed man hours, output increases on the level of unit man hours as would be expected but more important, in total as well. That is, a man works fewer hours but produces a larger output if he has sufficient work breaks. Although this latter effect was surprising at first, it is now clearly recognized and accepted.

In a study of farm unemployment, C. K. Wu and T. K. Lee (1963) estimated that about 19 per cent of the total (potential) labor units and 24 per cent of the available labor supply in the early 1960's in Taiwan were unemployed. However, not all these people could be removed from the labor force without a deterioration in production because of the seasonal nature of farm activities (Koo, 1968:27-43). As previously stated, in Sanlei, at certain times of the year, there is a shortage of man power. Nevertheless, the

original figures of Wu and Lee (1963) are based on some assumptions which I feel to be unreasonable as well as others which are sound. They assume each adult male constitutes a full labor unit with each female and child counted as a percentage of a full unit. The figures appear reasonable in village terms as is their allowance for housekeeping labor requirements which are related to the size of the household.

However, I do not feel that their estimate of the working hours bears sufficient relationship to reality. Wu and Lee assume (1963) and Koo agrees (1968) that an adult male is expected to work ten hours each day for 330 days per year. Both the number of hours in the normal work day and the number of working days in the calendar year appear high on the basis of my observations in Sanlei Ts'un.

The normal workday in the village was about eight and a half (8-1/2) hours. Only in the very busiest seasons was the work day any longer. All hired labor was figured on the 8-1/2 hour day with an uncompensated period for lunch. Lunch breaks were longer in the warm weather so that most villagers had sufficient time for a short nap in the middle of the day. Men took naps more often than women. As previously described, there was a considerable amount of labor exchange and any one day's labor was considered the equivalent of any other day's labor no matter what the task. However, in the busiest seasons, people did work overtime but

the extra hours were not compensated on an hourly basis. Rather, work went on until dark (with a dinner break) and the day's labor was counted as a long day. It had to be repaid with either another long day or a regular day plus something extra such as an afternoon of a second day. Even when working on his own fields, a man would not average ten hours a working day over an extended period of time as assumed in the above described research project.

The work year of 330 days, allowing 35 holidays, also appears to be rather high. As described above, there are regularly scheduled religious holidays which yield about 15 days per year when there is no work. There are periodic but unscheduled holidays which add another two days per year to the vacation schedule. Life crises events such as funerals and weddings also detract from the regular work schedule for funerals take at least one full day and weddings another. Weddings are usually scheduled such that they fall in a relatively slack agricultural period. In Sanlei, the weddings and funerals of both relatives and neighbors are usually a customary obligation. Also, there are some regular reductions in work activities related to the bi-monthly worship days and on Sundays. In all, it appears that the number of regular work days in a single year, given a high demand for labor would still be less than 330.

There was a second method employed in examining the normal number of work days. Some li men are full-time

miners at a mine which operates seven days per week the year around and pays on a piece-work basis. The owners encourage the men to work every day all year except for the three days mines close for Lunar New Year. I reviewed the records and found that full-time miners from the village area averaged 308 days per year, 9 hours per day, in spite of the fact that the number of days they could work was unlimited. The men's estimates of the number of days worked usually were 26 to 28 per month, a figure that would closely agree with actual yearly records. Additionally, several full-time farm laborers with good reputations for hard work were checked (men who owned or rented no property) and in each case, they averaged about 26 or 27 days work per solar month, once again yielding a figure near that of miners, just over 300 work days per year.

The evidence from Sanlei Ts'un, admittedly a small untypical sample of all Taiwan, suggests that the assessment of underemployment in rural Taiwan may be overestimated. Even when unlimited work is available, few men approached the norm suggested above of 330 ten-hour days. The average seems to be about the equivalent of a nine-hour day six-day week, less national holidays. This does not deviate too far from the schedule found in the United States 30 years ago. I would suggest that this kind of schedule may approach the maximum period of time that a man can perform on a job at the highest levels of efficiency

over extended periods of time. Functionally, there is likely to be some culturally specified alternative to provide such a proportion of relief time from a potential seven-day work week at twelve hours per day, a period for renewal and relaxation. In China, the traditional alternative is provided through religion as it is in many other parts of the world. Due to the nature of all functional explanations, it is not possible to specify why some other alternative could not have served as an adequate substitute.

The Yearly Work Cycle

Those work activities unrelated to agriculture are spread relatively evenly across the year. For example, mining is approximately the same all year, only slightly higher production is required during the cold weather. Listed below by month is the yearly cycle of agricultural activities with an approximate indication of the general need for labor. In order to promote continuity, the cycle is started with February which comes closest to marking a natural starting point.

> February--Busy. Prepare paddy fields and transplant rice seedlings. Fertilize orange orchards.
>
> March, April--Light. Fertilize and weed paddy fields twice. Prepare rice seed bed for second crop. Weed tea plants and commence heaviest harvest. Weed orange trees and apply insecticide.
>
> May, June, Early July--Very Busy. Harvest first rice crop. Prepare paddy fields and plant second crop. Weed tea fields and continue harvest. Weed orange trees, fertilize, and apply insecticide.

> Late July, August, September--Light. Fertilize, weed, and apply insecticide to paddy fields twice. Fertilize and cultivate orange orchards. Weed tea fields and continue harvest.
>
> October, November--Very Busy. Harvest second rice crop. Prepare fields and plant vegetables. Complete last small harvest of tea.
>
> December and January--Moderate. Harvest vegetables and oranges. Plant and transplant tea bushes and orange trees.

The above schedule provides a general picture of the agricultural activities devoted to the major crops but there are many other minor crops which are not listed. Vegetables are planted, fertilized, weeded, and harvested during various periods all year around. For example, onions and leeks are planted and harvested during nine different months of each year. Finally, during any slack period, trees may be cut down and left on the ground in open piles until sufficiently dry to be carried down the mountainside for home consumption or sale.

Currently, the ecological adjustment is such that the demand for labor is spread relatively evenly over the entire year. There are now only two periods lasting a total of about eight weeks when there are serious labor shortages and conversely, only about six or seven weeks when there is a moderate to heavy labor surplus.

When the village was first established, the main crops were subsistence vegetables and paddy rice. Rice production in a double cropping area necessarily involves large seasonal variations in the demand for labor.

Tea was added later and since the demand for labor inputs in tea production tend to occur during relatively slack periods in the cycle of rice production, tea helped even out the demand for labor.

Oranges, which were added more recently, are a second leveling factor in the seasonal labor demands because the date when most required work such as fertilizing, spraying with insecticide, and weeding must be completed is not crucial to eventual production quantities. This technology is unlike that for rice which permits few delays in many steps without serious reduction in the eventual size of the harvest. The only requirement in citrus cultivation for large prompt labor inputs comes during the harvest season which falls in December and January when both rice and tea cultivation activities are either non-existent or are at their slackest periods.

This ecological and technological adjustment has been a prime factor contributing to the elevation of the status of women. Some agricultural tasks such as tea picking and tea sorting are considered appropriate only for women, and other tasks such as orange orchard weeding are considered appropriate for either men or women. Because there are jobs such as coal mining readily available for mature men in the immediate area around the village, there has been little surplus of male labor exerting pressure to replace women with men. In the younger age groups, the

operations of the cloth and clothing factories around Taipei which require relatively unskilled labor inputs of a nature which can be accomplished by women, again draw on the female labor pool in Talei Li. Together, these various factors function to make female labor valuable and this fact necessarily means a level of relative economic independence for females. Moreover, in terms of agricultural activities alone, the addition of citrus cultivation to tea cultivation has made possible employment for women every month of the entire year since the demands of each have very little overlap. The combination covers the entire year fairly evenly.

The Daily Cycle

From the above facts, it can be seen that there is no such thing as a typical day in Sanlei Ts'un. There are seasonal differences due to the great differences resulting from the major agricultural activities being performed at the particular moment in time. There are at least 60 special religious holidays each year, some relatively minor, when the daily pattern of behavior varies and a few national secular holidays as well with similar varying behavior patterns. Monday through Fridays differ from Saturday which has a half-day of school instead of a full day and even more from Sunday when the school and several factories are closed. A greater number of visitors come to the village on Sunday and most farmers reduce their work loads. The summer

vacation period for the school alone marks significant changes in the patterns of behavior. Perhaps unexpectedly, mothers have more free time or at least more time to work in the fields during the school vacation periods because older children are available to care for their younger siblings. In spite of these problems, I will attempt a description of a "normal" day which might be described by a villager as a day when nothing much happened.

Midnight marks the beginning of the day. The village is very quiet as no one appears to be awake. In almost all village houses, a single low-wattage bulb is burning in the kung t'ing or kitchen. Through the night, few people will be seen. Four or five men may go outside to eliminate but most people use a chamber pot in the bedroom or kitchen if it is necessary. During the New Year season or after a robbery, two men of the I Ching carrying sticks very quietly walk through the village every half hour. Periodically, their muted voices may be heard together with the other two men on the patrol and the female who prepares the tea and noodles in her kitchen. The village is quite dark since the bulbs emit but little light and the surrounding countryside is even darker, punctuated here and there with the scattered glows of light in surrounding villages.

The first man to arise is the vegetable peddler at 3:30 a.m. After a quick wash with cold water in the kitchen and a meal of cold rice covered with pickles and spicy fish,

he peddles off in his three-wheeled cart alone for the city to arrive in the market by 5:15 a.m. About 4:00 a.m. the second man in the village is up and quickly heads for the temple carrying incense sticks and flowers for worship in fulfillment of a pledge to the gods for relieving his prostrate trouble. The noise he makes starts others stirring. As people rise, they usually head for the outhouse and then into the courtyard or kitchen to wash. The wash water is at air temperature and therefore, often chilly in the cool morning at dawn's light.

By 4:30 a.m., the first group of six women is off to the river to wash clothes together. They have eaten a handful of cold rice and will prepare and eat breakfast after they return about an hour later. By the end of the next hour, there are few silent households. The active married women are up first and after ablutions, start the fire for breakfast although about one of five families will have a cold meal. Women are followed by the children, awakened by the noise in the kitchen. Few people are ever formally called and told it is time to get up. The active mature men are last to arise except for the occasional old person who may sleep until very late.

Before breakfast, a representative for each household worships in the kung t'ing with incense sticks. This is supposed to be the oldest male in the household but it appears that women perform the task about half the time. Although

people say that the entire family should gather to observe the ceremony, rarely is anyone other than the worshipper and small children present. Instead of eating breakfast at the table in a group, as each person is ready, he takes a bowl to the cook who dishes up his food and provides a cup of tea, hot only if a fire has been made. Breakfast is eaten wherever room is available, often while squatting in the courtyard.

The first bus passes through the village at 5:45 a.m. picking up two men heading for work in town. By 6:30 a.m., all the people who work in town will be gone, two girls on bicycles joining the two on their way from Tzulei, two factory trucks each picking up their complements of girls, and the remaining men off to town on bicycles. About this time the miners walk off towards the mines so as to be ready for work down in the shaft at 7:00 a.m. Those working in the fields, men and women alike, leave at various times depending on travel distance so as to reach the work location by 7:15 a.m. at the latest.

All the children in the fifth and sixth grade and half of those in the first through fourth grade head for the Erhlei school which starts at 7:15 a.m., joining the children who are walking from Tzulei. Since anyone late to school will be punished with a whipping, most children arrive early and play on the slides and in the school yard while waiting.

Until lunch-time, the village is relatively quiet. The only people to be found are the babies and small children, half the children in the first four grades, a few young unmarried females, old people, and the mothers who are not working in the fields, most of them with small children to tend. The children are playing but seldom stray far from home. Some women are off to do their washing for very few women leave it until the afternoon. Two work teams of older women are busy sorting tea, a few small children playing on the ground beside them.

Every hour or so the public bus rambles through the village to the end of the line and back. After the first couple runs, about two to five people will get on and the same number get off on each passage. All during the day a few women will be going to Hsin Tien to shop. Skipping one return trip allows a woman a full hour for the market, sufficient time to buy for herself and three or four others as is usual. Also, the Communication Bureau bus periodically passes through the village as well as an occasional truck, empty on its way through, brimming over with coal on its return. Children collect the coal spillover from the roadside for the kitchen.

By 11:30 almost everyone is home for lunch. Only when working on rice harvesting and planting or when working in fields far up in the mountains do people carry a lunch like the miners in a flat tin can. Lunch is invariably hot,

usually including a soup accompanied by rice or sweet potatoes and vegetables. Lunch is eaten in a manner similar to breakfast, individually in scattered locations. In the hot weather with its longer days, most field workers have a nap after lunch but in the winter with short days, the workers return to the fields within an hour. The school children have an hour for lunch and in the afternoon, the other half of the first four graders attend.

The afternoon period is similar to the morning. Most women have their washing completed now and there is more visiting and more time for cooperative shared tasks such as grinding rice or preparing soy sauce. About two times per week, a group of women go into Hsin Tien to a movie. However, the groups vary so that no one sees a movie more often than once a month or so. By 4:00 the children are home from school. They have few tasks other than feeding the farm animals. Many women turn over the care of the small children to the older students so they can go to the mountains for a load of wood. The temple caretaker has cleaned the temple and is busy now chasing children out who are running and making too much noise.

There have been a few more people in the village than the above might suggest. Since fields are scattered, some men pass through the village on their way from one task site to another. A man hauling dry wood from the mountain will make six or seven stops during the day. The

vegetable peddler returned by 10:00 a.m., sold out the last of his load, had a nap, and will work in the fields most of the afternoon. Typically, five or six salesmen will come through the village selling cloth, clothes, medicine, brooms, etc., directly to householders or to call on the two village stores. The pig man sells to fu every other day, and when he arrives people gather to make purchases and gossip. The village secretary from Hsin Tien visits about three times each week and the policeman from Pouti rarely misses wandering around part of each day.

Dinner time varies, later in the hot weather, but usually around 5:30 to 6:30 p.m. Dinner is always hot and is the meal most likely to be eaten as a family unit while gathered around a table but since some families are large and many tables are small, the women who cook often eat while standing up in the kitchen and the children, who started earlier, squat in the doorway. A small child will sit in someone's lap and be helped with food and encouraged to eat. Evening worship is performed in the same manner as morning worship. On religious holidays it always precedes dinner but on other days it may either be before or after dinner.

After dinner, women will clean the kitchen while men repair tools. Both men and women who work in the fields will plan and discuss the next day's activities for few people enjoy working alone and even when labor is not being

exchanged or hired, men with small contiguous plots will plan activities so there is someone nearby working too so that during periodic breaks, they can enjoy a cigarette and conversation together. Even men who are usually silent claim to feel more comfortable when someone else is around. As I observed village activities over a period of time, I was struck by the fact that it was quite rare for someone to be isolated for more than a few minutes. The detailed plans made in the evening to work near each other indicate this fact is by design.

After cleaning up the kitchen and preparing for breakfast the next morning, women have a little leisure time before giving the small children baths in the kitchen and putting them to bed. Slightly older children are bathed and dressed in pajamas but they may play quietly or study for a while before going to bed. The older children and adults now take their baths in approximately age order although unmarried adults are often far behind. Fires would rarely be specially started for hot water so that if one desires hot water for his bath, he must take it soon after dinner, making use of the stove which is hot from cooking dinner.

After bathing, there is leisure time for recreation. Several conversational groups tending to consist of age-graded neighborhood clusters gather in the courtyards. Once past age 30, most husbands and wives will be in the same

conversational groups. About thirty or forty people will be watching the television set in front of the store and purchasing an occasional cold soda pop or ice cream. There will be several groups of single young women sitting in one member's bedroom conversing. Most of the young unmarried men in the village will be together in a single group. Few people will be in town since the last bus leaves at 6:30 p.m. and the road at night by bicycle may be dark and difficult, especially in the rainy season. The last visitor to the village is the man peddling the delicatessen cart from which villagers purchase the fish and pickles to accompany breakfast in the morning.

About 10:00 p.m., the caretaker locks up the temple and by 10:30 p.m. most people are in bed. The stragglers are usually the young unmarried men or a few middle-aged married men who have been to the drinking place down the road. If one of the bi-monthly medicine shows is in town, everyone will stay up later. By 11:30 p.m. the village is usually silent once more and another day is about ready to commence.

CHAPTER X

SUMMARY AND CONCLUSION

The immediately preceding eight chapters constitute a brief ethnographic description of Sanlei Ts'un with particular attention focused on the role of women. The role behavior of women is quite unlike the brief description abstracted from traditional accounts which was considered in the first chapter. Provided below is a more extensive review of the traditional literature followed by an explicit contrast with the observed female behavior patterns in the subject village. Although part of the differences between observed and expected role behavior may be due to regional variations and the cultural and social changes accompanying modernization and industrialization, it will be demonstrated that the previous case for the lowly position of women has been exaggerated. The last section of the chapter explores possible reasons for the errors and concludes with a suggestion for further research.

Traditional Accounts of the Position of Women

Perhaps the best manner to capture the flavor and fact of traditional accounts explicating the role of women

in Chinese society would be to provide a series of direct quotations from the literature. Although these have been taken out of context, efforts have been exerted not to distort the impression created by the original author. Although many of the statements may appear to be over-simplified and absolutistic, i.e., without exception, the fault is that of the author and not mine. The eight examples are as follows:

> The domination of age over youth within the old-style family was matched by the domination of male over female. Chinese girls in the old days were more likely than baby boys to suffer infanticide. A girl's marriage was, of course, arranged and not for love. The trembling bride became at once a daughter-in-law under the tyranny of her husband's mother. In a well-to-do family she might see secondary wives or concubines brought into her household, particularly if she did not bear a male heir. She could be repudiated by her husband for various reasons. If he died she could not easily remarry. All this reflected the fact that a woman had no economic independence. Her labor was absorbed in household tasks and brought her no income. Peasant women were universally illiterate. They had few or no property rights. . . The inferiority of women imposed upon them by social custom was merely one manifestation of the hierarchic nature of a society of status. . . While male and female were both necessary and complementary, one was by nature passive toward the other. Building on such ideological foundations, an endless succession of Chinese male moralists worked out the behavior pattern of obedience and passivity which was to be expected of women. These patterns subordinated girls to boys from infancy and kept the wife subordinate to her husband and the mother to her son. Forceful women, whom China has never lacked, controlled their families by indirection, not by fiat (Fairbank, 1958:30-1).

> In China, the expression "an article on which money has been wasted" is a common paraphrase for designating a young girl; and the most ideally perfect daughter, viz. she who possesses the virtues of the

eighteen Lohans according to a Chinese proverb, is not equal to a club-footed son. . . A Chinese woman may even be repudiated by her mother-in-law; a Chinese who admits to having beaten his wife to death escapes any penalty if his pretext for doing so is that she failed in her filial duty towards his parents. . . A Chinese husband would blush if he were surprised in the act of conversing with his wife. In a group composed of several couples, the women always keep to themselves and the men do the same without any communication between the two sides or any sign which would betray who is married to whom. . . If the Chinese woman has no son and gives birth to a series of daughters her existence in the home becomes a hell (Herbert, 1965:221-36).

Girls have been generally regarded as much less valuable than boys and sayings in common circulation appraise sons as infinitely preferable to daughters. One such proverb states in effect that the most beautiful and gifted girl is not so desireable as a deformed boy. . . Among the very poor, the killing of female infants has been by no means unknown. While statistics are lacking, it seems, indeed, to have been very common. . . In ordinary homes, especially of most of the farmers and the poor, girls and women have led a life of hard labor (Latourette, 1959:679-80).

The present position of woman in China is a heritage of the remote past, as is illustrated by the most ancient Chinese literature . . . The essence of Chinese classical teaching on this subject is, that woman is as inferior to man as the earth is inferior to heaven; and that she can never attain to full equality with man. According to Chinese philosophy death and evil have their origin in the Yin, or female principle of Chinese dualism, while life and prosperity come from the subjection of it to the Yang, or male principle; hence it is regarded as a law of nature to keep woman completely under the power of man, and to allow her no will of her own. The result of this theory and the corresponding practice is that the ideal for women is not development and cultivation, but submission. . . We must, therefore, regard the position of women in China, as the ultimate outcome and a most characteristic fruitage of Confucianism. In our view it has been a bitter fruit (Smith, 1899: 305-6).

The low status of Chinese women whether in the family or in society is proverbial. In traditional Chinese fiction the female character was frequently introduced by the line "unfortunately she was born a woman." K'ang Yu-wei, the precursor of modern reformers at the end of the last century, listed being born a woman as one of the calamities of life. . . To hold women in general, and young and middle-aged wives in particular, to an inferior status where mistreatment abounded and even death lurked, the authority of the family was supported by all the repressive features of the traditional institution of arranged marriage. . . In addition to concubinage, which posed a constant threat against the wife, and the absence of freedom of divorce, which served to block the wife from a peaceful means of escape from an unpleasant situation, there were three other traditional limitations which applied not only in marriage but to the general status of women in Chinese society: loss of her name, seclusion, and lack of education (C. K. Yang, 1959:106-111).

The second element [in summarizing the culture of West Town] is what I call estrangement between the sexes. On the one hand this pattern prescribes sex inequality, and on the other it necessitates the elimination of all erotic expression. Both measures are means for subordinating the husband-wife relationship and enhancing the father-son relationship. In West Town we see an outright superiority of men over women. Not only are husbands above their wives, but brothers are also superior to their sisters. This inequality is implied in the life of the people and clearly stated and recognized by both sexes without reserve or hesitation (Hsu, 1949:241).

The low position of women in China is due to a combination of several economic and ideological factors. . . The traditional Chinese philosophy provided a theory of women's inferiority that was an ideological justification of her lower status in the society of imperial times, and helped to perpetuate it. . . Buddhism, in which woman is the personification of all evil, added new ideological propositions to the idea of woman's inferiority. For twenty-two centuries, hundreds of male and female Confucian writers wrote scores of books on the position of women and their role in family and society, and devised practical rules for their

> education and conduct. With slight variations all these books presented the same teachings. Obedience, timidity, reticence, and adaptability were the main virtures of women. Three rules of obedience to man shape a woman's life, "An unmarried girl should obey her father and elder brother, a married woman--her husband, a widow--her son." . . . The legal status of a woman was inferior to that of her husband. . . Chinese women had practically no property rights. . . It is not surprising that girls were the main, if not exclusive, victims of infanticide, which was practiced in the poor families of China from time immemorial (Lang, 1946:42-6).

> A woman's social position in ancient China was even more deplorable [than her legal position]. Politically, she was a mere nonentity but socially, she was an inferior species of mankind--a human chattel, slave of men's caprices. Being considered inferior to men, she was regarded with indifference, if not with studied contempt, not only by the men but also by her own kind. Her birth was an unimportant event and even the name that was given her by her father at the time of her birth was not supposed to be known beyond the family threshold, and the education she received, or was entitled to receive, was negligible; for it was deemed improper for women to possess too much knowledge. . . The so called "Three Obediences and Four Virtues of Women," which have shackled the Chinese women for thousands of years, derive their origin from the belief in the superiority of men over women and from the attempt of the ancient moralists to hold women in lifelong subjection. By means of the three obediences a woman is constrained to obey the paterfamilias at home, to render obedience to her husband after marriage and to be obedient to her eldest son after the death of her husband. By means of the four virtues a woman is made to preserve her feminine qualities, to be gentle in disposition and pleasing in appearance, to be chary of speech, and to be assiduous in the performance of her domestic duties (Chiu, 1966:18-20).

An easily-provided larger listing of many more examples by other equally renowned authors with similar viewpoints and arguments would only provide quantitative rather than

qualitative changes for I feel the above sample is representative of a wide body of literature. The above authors are drawn from such fields as anthropology, history, religion, sociology, law, and philosophy and are members of such nationality groups as French, English, Chinese, Russian, and American. In each case the cited item was written after extensive field work in Chinese society or by a sinologist who has extensive familiarity with Chinese sources.

In spite of the fact that lengthy segments were used in order to preserve the author's intent, in all fairness to the cited individuals, it should be made patent that several did list exceptions to the dominant patterns. For example, although stressing that such women were exceptions, Herbert does state that China has had many female priests (1956:223), empresses (1965:225), and poets (1965:227). In a chapter solely devoted to what he describes as the degraded situation of women, Smith (1899:258-311) scatters about contra-indications such as in his discussion of noisy women and their "hen-pecked" husbands (1899:304-5). The anthropological accounts in particular appear much more sophisticated in this regard with a greater recognition of actual variation and a lesser emphasis on the ideal patterns.

In summary, China is usually described as patrilocal, patrilineal, and patriarchal. Females were always inferior to men and at birth, boys were desirable and appreciated

while girls were a sorrow. The practices of infanticide and the sale of children as servants or prostitutes usually involved only females and rarely, males. The arranged marriage was especially hard for a female because she lacked freedom of choice and her residence changed to a home in which she was a virtual stranger with little status, under the control of her husband's family, with her husband never permitted to champion her cause or show any public affection. Her essence was yin, acquiescent, passive, and dark as opposed to the male essence, yang, active masterful, and bright. All her life, a female was expected to be subordinate to males, in turn father, husband, and son. She was expected to be uneducated, obedient, submissive, untalented, economically useless,[1] unprotesting, subordinate, timid, reticent, and passive.

The Contrasting Position of Women in Sanlei Ts'un

The position of women in Sanlei Ts'un bears little resemblance to the patterns delineated immediately above which were abstracted from the traditional literature. This discrepancy might be explained on the basis it is due to the fact that the patterns presented in the traditional literature were inaccurate, Sanlei is deviant, or that social and cultural changes have been so great that the patterns which were accurate for an earlier period in history are no longer relevant. A few examples are listed below to illustrate that the first hypothesis (traditional patterns are

inaccurate) is true; although change is endemic, the data in Sanlei is consistent with concrete data in the traditional literature in spite of the many converse generalizations.

It is supposedly a Chinese value that women in traditional China should not be educated (Fairbank, 1958:30; C. K. Yang, 1959:111; Chiu, 1966:19). Currently, education in Sanlei village is compulsory for a full six years for boys and girls alike. One of the three junior high school graduations ever achieved by Sanlei residents is a female. Even eighty years ago, two of the fifteen village children in school were girls. One of the original female settlers was semi-literate and was said to possess a fine form for characters.[2] Although change to near equality of educational opportunity has occurred (See Chapter VIII), it was not from an initial position of total denial of education for females. Rather, females went from a minority position in education to one of near equality with males.

We are unable to fully assess the nature of Sanlei villagers' attitudes towards the education of women in the past but we can attempt an educated guess. Today for instance, although it is felt that education is more important for males, any man who goes beyond elementary school should not marry an illiterate woman. This belief is related to the general proposition advanced in the section on marriage (Chapter VIII) that spouses should not be extremely different from each other in any major attribute[3] such as

popularity, beauty, intelligence, wealth, etc. This proposition was also strong in the past but we cannot be sure if education at that time was one of the qualities designated for minimal disparity.

We do have evidence from history and literature that among the wealthier classes in society, there were many educated females. Indeed, Herbert points out that "in the Great Chinese Encyclopedia, out of 1628 volumes, 376 are devoted to famous women." Seven deal with "the literary productions of women" (1965:227). This kind of evidence is only partially supportive because the relationship between the patterns of the Great Tradition of the wealthier classes and the Little Tradition of the village is only problematical.

It is granted that there is still a disparity between rates of literacy among men and women although the percentage of literacy historically was low for both. In a survey conducted in North China in 1930 among 400 farm families, Gamble found that the literacy rate of 25% among men age 41 to 50 was more than 30 times as high as the rate among women in the same age bracket. These figures, suggesting an educational system operating between 1890 and 1900,[4] clearly indicate discrimination but do not suggest total denial of educational opportunities for females. The differences in rates may well merely reflect the uses to which education could be put. Education was expensive in terms

of the cost of tutoring and in the loss of the labor units for food-getting pursuits contributing to family sustenance. A major goal of education was for the student to pass the civil service examination and thereby acquire a government position. Since the examinations and government positions were both denied to females, there was correspondingly little material advantages to be achieved by educating girls. In spite of this lack of any opportunity to achieve economic returns from an investment in the education of a female, the figures furnished by Gamble do show many literate women. Perhaps the point may best be illustrated by analogy. There are three Michigan schools which teach adults how to drive large highway trucks. Although none of the three discriminate against women, there are few female enrollees or graduates (two of about 350 in 1968) because of the extremely limited job opportunities for female drivers.

Another area of discrepancy between traditional literature and actual life revolves around the assignment of superordination to male and subordination to female statuses. There are strong statements in the literature that a female is always subordinate to a male. At various stages in her life cycle, she is subordinate to father, then to husband, and eventually to son (Fairbank, 1958:30; Smith, 1899:305; C. K. Yang, 1959b:106-11; Hsu, 1947:241; Lang, 1946:42-46). These three levels of relationship are each discussed below.

The literature suggests that boys had an easier life than girls. In Sanlei, girls do work harder than boys, but in general, are usually closer emotionally to mother than boys. Fathers seem strained and formal in their interaction with sons and more relaxed with girls; not a few men are quite indulgent towards their daughters. According to Lang (1946:29), "the mother was chia-tze, the symbol of kindness, the father chia-yen, the symbol of dignity and sternness" in the Chinese family.

Children in Sanlei, male and female alike, were expected to be obedient to parents. Yet, child-rearing techniques tended to be quite permissive and small children often refused to carry out parental commands and the child who threw a temper tantrum was ignored. Many young adults refused marriages arranged by parents, a few ran away but quite often, they were able to assert their will and remain at home. Children who work outside their homes turn over their money to parents at about the same rate whether male or female. Girls however, tend to be watched more carefully and strictly but most girls are still able to exert considerable influence and control over their own destinies. Many girls show little hesitation to challenge parental decisions as illustrated in connection with the previous discussion of marriage, sex, dating, and work.

The converse of the above would be the relationship between mother and son. It should be obvious that during

the stage of extreme dependence, while the boy is a baby, the mother has absolute control and even later, during early childhood, nearly absolute control, but the traditional literature does not seem to take cognizance of this social fact. Moreover, elements of the behavior pattern established between a son and his mother are likely to persist after the son reaches maturity as social scientists have established in the study of socialization and habituation. This latter fact probably has value in explaining the lesser amounts of conflict found in a patrilocal as opposed to a matrilocal household which was discussed in the explanation of the postulates introduced in Chapter V.

Another element related to the above argument is found in the requirement that the young must show respect for the aged. The traditional literature frequently includes statements about the respect due from females to males and from young to aged in the same paragraph and even in the same sentence (Chiu, 1966:17; Fairbank, 1962:31) without ever confronting or considering the obvious fact that these two requirements are necessarily in conflict in the relationship between a son and his mother. A simple exercise in logic should make this clear but similar neglect of aspects of logic abounds in the literature.

For a third example of this failure to follow through, note that after much discussion about the lowly status of women in one section of an article or chapter of

a book, there will be a discussion of the stage of life in which a Chinese woman comes into her own with high status, i.e., when she is a mother-in-law with daughters-in-law to supervise and a home to manage (Smith, 1899:277; Fairbank, 1962:31). There is an implied assumption, occasionally made explicit, that a woman often possesses great power and authority in the domestic sphere in spite of the fact her husband may have sole control of external relations between the household and the outside world. Once more the obscurification is continued in that the discussion focuses on the relationships between the females within the home and neglects the relationships between the older woman and her husband and married son. For example, in an outstanding work which stresses various relationships within the family, Lang (1946) devotes a special section to each of the following roles or role relationships: Father and Son (26-9), Mother and Son (29-30), Father-Daughter (30), Daughter-in-law (47-8), Wife (48-50), Mother (52), Widow (52-3), Old Man and his Married Son (229-31), Old Woman and her Married Son (231-2), and Mother-in-law and Daughter-in-law (232-7). The only one of these categories which might suggest the relationship between a woman and her husband and son as compared with her daughter-in-law in the same household is the category, Old Woman and Her Son (231-2) but the topic is neglected in this section and nowhere in the book does Lang really confront the dynamics of this issue in a single household.

Assume an old woman does have the power in the domestic sphere which is implied in the literature and explicitly described for Sanlei Ts'un. Also consider our more recent awareness that the vast majority of Chinese households contain only nuclear families. The combination of these two factors makes it likely that some of the women's authority must be over men. There is no question about the fact that Sanlei has many domineering women and I have met many in Taipei. The traditional literature always describes some domineering women but terms them exceptions (Smith, 1899: 304; Fairbank, 1958:31).

Some of the literature explicitly suggests the duties of a male towards his mother in which her superiority is implicit. Confucius discussed the responsibility of a child towards both of his parents. He is said to have taught in the Hsiao Ching:

> In serving his parents a filial son renders utmost respect to them while at home; he supports them with joy; he gives them tender care in sickness; he grieves at their death; he sacrifices to them with solemnity. If he has measured up to these five, then he is truly capable of serving his parents. . . When parents are alive, to serve them with love and reverence; when deceased, to cherish their memory with deep grief--this is the sum total of man's fundamental duty, the fulfillment of the mutual relations between the living and the dead, the accomplishment of the filial son's service of his parents (Kublin, 1968:42-3).

Many generations of Chinese children were raised on "The Twenty-Four Examples of Filial Piety," short stories which serve as models for proper life, each emphasizing the duties of children to parents by example. In one story,

Kuo Chu, burdened with a wife, child, and mother to support in hard times with little prospects, sets out to bury his child alive so that the child's food can be given to the old mother. In digging the grave, a pot of gold is discovered and the moral of course, is that proper filial behavior will be rewarded. The great Chinese novels constantly illustrate the same general theme. In All Men Are Brothers, a victim speaks of his old mother rather than of his wife or children in order to evoke an expression of compassion or mercy from the robber.

However, the most important relationship under consideration in this section is between husband and wife, one in which the wife is supposed to be thoroughly dominated by her husband. Most, but not all, brides in Sanlei Ts'un have little to say and are clearly dominated by their husbands and perhaps a mother-in-law if one is present in the household. By the time a woman reaches age 30 in Sanlei, she usually has considerable power in her own home. Women take major responsibility for raising children and play a considerable part in structuring the day's activities, plan the menus, do most of the shopping, and in many houses, control the budget or substantial portions of it. Not a few women are completely dominant in relationship to their husbands.

Almost everyone pays lip service to the myth that men are fully superior to women and concrete social action

also serves to maintain the pretense. A casual observer may easily be fooled for in many cases, it appears that the villagers are actually fooling themselves. There is no common kinship term that a man can use to address his wife. Until the children are born, permitting teknonymy through them, a man avoids using any term at all other than the equivalent of "hey you." However, the wife can both address and refer to her husband as "Lord and Master." While the idea of subordination-superordination is conveyed by the term, it may be used by a domineering wife as part of an order to her husband to perform some task. To illustrate, Liao Wei-yu (one of the men in the six-family compound described in Chapter V), his cousin Liao Wei-I, and I spent about four hours one afternoon sitting in his courtyard trying to repair a tea presser. During the first three hours, his wife sent Wei-yu on several errands such as fetching water, bringing wood to the kitchen, putting up a bamboo pole for drying clothes, etc., each time ordering the task in an imperious tone although the command was prefaced by the usual "Lord and Master." Wei-yu complained to us, softly so his wife would not hear, that to refuse her requests would only cause trouble. After about three hours, the li secretary stopped by to review some tax record changes with Wei-yu, a village lin chang (neighborhood leader). Because the secretary is an important official, the four of us went into the kung t'ing and sat around the table while Wei-yu ordered

his wife to serve tea. She quickly complied, brewing a fresh pot and poured the tea into our cups, eyes downcast and meek. She came back a couple of times to ask if her "Lord and Master" desired more tea. Immediately after the secretary left, while we were still sitting around the table finishing a cigarette before returning to the courtyard to finish the job, the "Lord and Master" was sent by his wife to immediately fetch two buckets of water from the river. For the outsider (the secretary), Liao Wei-yu is the master of his house; among his intimates and neighbors, everyone knows his wife is the boss.

Questions by an anthropologist will evoke all kinds of statements about the superiority of men and their authority over women. However, if material is carefully elicited and logically analyzed, a different picture is likely to emerge. For example, achieved status with a strong tendency for it to focus on the family unit rather than on the individual is extremely important in Sanlei as it is in most of China. In any discussion about the manner by which a family achieves prosperity or success, much of the material will relate to the importance of women. It is believed that a woman can make a man work hard and it is her thriftiness which allows a family to accumulate money and achieve prosperity. A man will brag about his wife's ability to save money and a woman's potentiality for thriftiness is an important attribute to be considered in selecting a bride.

The belief about the importance of a woman's ability to save necessarily means she has some power or control over the family budget and implies she also has the power to be extravagant. Every story of financial success in the area save one[5] included a hard-working man and a hard-working and thrifty woman in the cast of characters.

There was a corresponding belief that in bargaining, a woman could always obtain the lower price which may have been part of a self-fulfilling prophecy for everyone believed it. Shopkeepers claimed that they asked the same high price for certain items regardless of sex but they had two underlying basic acceptance prices, the lower one for women. Men claimed women were better bargainers because they had little fear of shaming themselves, i.e., they had little "face" to protect.

This concept of prevention of shame contributed to the difficulty of obtaining accurate data about money management. In spite of the emphasis on women's thriftiness, men want to be known as the budget managers. However, on several occasions while we were sitting around chatting in an evening, a group of us decided to go down the road for a glass of beer or wine. About half of the men had to go home to get money from their wives first, even some of the men who claimed complete financial control.

As previously explained, it is felt that a good wife in Sanlei will be thrifty and will drive her husband to

wo
sa
th
pe
i
th
"
o
f
s
i

D
d

Le
hu
tr

work hard. Indeed, this role activity is considered necessary for the family to achieve success. It appears to me that the majority of Chinese husbands that I met were henpecked, some obviously but others, less obviously. That is, it has been explained that a woman makes her husband do things but also praises his status as a man who is the "lord and master" for all the world to see. This is not the only report of the nature of family life in China which finds many henpecked husbands. Hu Shih, for example, strongly denies that the woman's position in the family has in actual fact been nearly as low as commonly believed:

> The position of women in the old family was never so low as many superficial observers have led us to believe. On the contrary, woman has always been the despot of the family . . . No other country can compete with China for the distinction of being a nation of hen-pecked husbands (1934:104-5).

D. J. Lee, a popular columnist for the China News, a Taiwan daily English-language newspaper, wrote that:

> In no country in the world does one hear so many stories of henpecked husbands as in China. . . No husband can be henpecked unless the wife is the supreme ruler of the house. . . It is also the traditional belief of the Chinese that being henpecked is a virtue, because henpecked husbands are destined to be more successful in the world. After all, as far as the husbands are concerned, a wife is only a person who has the best interest of her husband at heart. The truth is that the Chinese are proud of being henpecked even if they are reluctant to admit it (1967).

Let me repeat two of the innumerable stories of henpecked husbands but with the understanding that humor suffers in translation from one culture to another. Both of these

stories are considered extremely funny by the men and women alike in Sanlei village:

> A club for henpecked husbands was having a meeting one day. The wives of the members of the club got wind of it. Armed with brooms, clubs, sticks and things, they marched to the club to have it out with their husbands. Having been warned ahead of time, the husbands took to their heels and made good their escape. When the wives arrived, they found only the chairman had the courage to remain where he was. But when they took a good look at him, they found he was dead.
>
> In an attempt to determine how many of the officials in his palace were henpecked, the Chinese Emperor summoned every married man in his palace to his presence. He ordered those who were henpecked to stand on the right side of the room and those who were not henpecked to stand on the left side of the room. Before long, the Emperor saw that they were all standing on the right side of the room with two exceptions--one man chose the center and one man chose the left side.
>
> "What made you choose the center?" the emperor demanded of the man who was neither on the left nor right side.
>
> "Your Majesty, I didn't know which wife you meant," was his reply.
>
> The Emperor then turned to the man on the left, "Do you mean to tell me that you are the only man in my entire court that is not henpecked?"
>
> "No sir," he replied. "When I was leaving my house this morning, my wife warned me not to go along with the crowd!"

The above discussion of many domineering wives and henpecked husbands is largely based on an assumption (all houses are patrilocal and supposedly patriarchal) that makes it extremely difficult to argue convincingly. The assumption is simply not true. As we have seen for Sanlei and for other places wherever reasonably complete data are provided, there are significant deviations from this pattern. Many households were neolocal and a considerable

N
f
2

m
p
c
t

m
v
i
w
w
Sa
ar
fa
wo
ar
aw

to

number were matrilocal (see Chapter V). Moreover, many households have officially registered female heads. W. Gamble points out that while "some authorities say that a woman is never recognized as the head of a family," he found that four per cent of the official heads among 5,225 families surveyed in 1930 in North China were females (1954: 28).

Whenever concrete data are provided in place of the more frequent set of summaries or abstractions, the same picture of numerous exceptions emerges. Too often, the exceptions have been simply dismissed, even when the exceptions are more numerous than the ideal dominant pattern.

The numerous exceptions to the normal patrilocal male-headed households found in any Chinese village provided alternative models for the behavior of women living in the traditionally structured households. If all women were living in the same kind of structural situation, there would likely be but few major role patterns. In fact, in Sanlei, there were women who were heads of households (with and without living husbands), women living in extended families, nuclear families, and stem families, etc. Since women's work groups are quite intimate and living conditions are such that no one has much privacy, everyone is soon aware of the content of each other's role relationships.

Outside the household, women are undoubtedly inferior to men in Sanlei Ts'un and probably in most of China as

well as illustrated by the fact that they have no "face" to protect and that only men were admitted to the traditional examination system. There are many notable exceptions however. Many women hold high political offices in Taiwan today and throughout history, there have been periodic Chinese empresses as rulers of the kingdom and more often, females existing as powers behind the throne, engaging in palace intrigues and influencing men.[7] To my knowledge, only one period in Chinese history prior to the present was witness to significant efforts to establish the equality of women to men. During the Taiping rebellion, the rebels claimed that:

> Women, like men, . . . could take the state examinations and could hold civil or military offices; there were special female contingents in the Taiping army. Foot binding, so common among the higher classes since the twelfth century, was strictly forbidden, as was prostitution; white slavery and rape was punished by death. Monogamy was obligatory; women and girls who did not have the protection of male family members were particularly taken care of (Franke, 1958:47-64).

Both the Nationalists in Taiwan and the Communists on the Mainland, following the lead advocated by Sun Yat-sen, are promoting the establishment of the equality of women.

As we have seen, there are several females numbered among the most important dieties in the Chinese pantheon of gods. It appears that currently, two of the most important gods in Taiwan are females, Kuan Yin and Ma Tzu. The degree of emphasis on female gods in China is revealed by the fact that Kuan Yin is the Chinese name for the male Indian god

Avalokitesvara who "hears the complaints of mankind" (Eichorn, 1964:192). Although originally male, in about the eleventh century in China, Avalokitesvara becomes a female divinity who is the embodiment of beneficence (Eichorn, 1964:192).

In the practice of religion, although the majority of religious functionaries are men, there have always been a number of temples and monasteries staffed entirely by women. In Sanlei, as in most other Chinese villages, women actually perform much of the ritual activities in spite of the value which specifies that they should be performed by men, especially the required ritual. One merely has to observe celebrants in any Chinese temple a few hours to find that a majority of the worshippers tend to be women.

Some writers have claimed that Confucius and Confucian doctrines are responsible for the lack of esteem in which Chinese women are regarded and the comparatively low position they are said to have in society (Smith, 1899: 305-6; Lang, 1946:42-6; Straelen, 1936:43) but the evidence is not certain. O'Hara, for example, cites a great body of Confucian teachings supporting the opposite position (1955; 1963). For example, O'Hara cites the stories of Confucius and his relationships with women (1955:163-4) in which he acceded to their wisdom. Confucius also taught that wives and favorite concubines were responsible for ruling the inner apartments and encouraging men to behave properly (1963: 79-80).

There is some suggestion in the literature that the woman's status has been recently elevated only by her economic contributions to the family. This contention has been most strongly expressed in some of the Japanese material (Koyama, 1959). It should be realized that the traditional literature clearly indicates that rural girls and women have always worked hard and made valuable contributions, especially in the majority of the Chinese households which were poor. The two facts of the importance of economic contributions in elevating status and the large numbers of contributing working women, although juxtaposed in the literature, are rarely logically confronted with each other. That is, no one seems to consider the logical implications of the two sets of beliefs. This is not unlike the many other examples of this inconsistent behavior we have demonstrated. The number of women who were economic contributors was always probably high for it appears that about 85% of China's population were peasants living in villages and the majority were fairly poor. There is little concrete data on the extent of female participation in general farm work but it appears to be significant. In addition to these regular contributions to the family farm work, there were agricultural specialties in various parts of China which largely depended upon the labor and contributions of women such as the silk industry described by Fei (1939) and the tea industry discussed in Chapter III. For

many
of
tio
dis
dus
mal
the
is

bec
tai
lif
One
whi
eth
fem
usu
abs
wha
ide
in
lev
leve
pref
can

appr

many centuries, such industries which covered large areas of China meant that women's work constituted valuable additions to the farm family income. Tawney (1932:117-149) discusses the significance of female labor in cottage industry and in small factories but provides no percentage of male to female contributions. If the recent argument that the contributions of females served to elevate their status is true, then the status was elevated long ago.

As stated in the beginning of this dissertation, because the official historical record from the past contains few facts about the peasant or the nature of rural life, we are forced to make many assumptions and guesses. One kind of clue may derive from fiction for the fiction which tends to endure in any society usually embodies the ethos and values of the society. An analysis of the part females play in most of the classical stories reveals roles usually quite unlike the traditional normative standards abstracted from the Great Tradition but very similar to what we have described for Sanlei. It is argued that the ideal normative standards of the Great Tradition for women in China are not in accord with the facts on the actual level for both Great and Little Traditions nor on the ideal level for the Little Tradition, i.e., peasant men seem to prefer a wife to be somewhat thrifty and domineering so they can achieve success.

There is a phrase in Shakespeare which seems appropriate, "Methinks he doth protest too much." It is

con
tur
sid
to
For
day
of
the
lev
lit
ext
wor
for
may
der
th
le

qu
in
fa
si
wh
be
on

considered axiomatic in anthropology that there will be cultural elaboration around items and problems which are considered important in the society. These items are subject to fads and fashions, that is, they may change with time. For example, pollution is recognized as a major problem today in the United States and one finds an enormous amount of material discussing it although twenty years previously, there was little material in spite of the fact pollution levels were nearly identical. The very great quantity of literature in China, most of it written by men, encompassing extended periods of time, devoted to the lowly position of women, describing their proper relationships to men, setting forth a multitude of laws to insure proper behavior, etc., may well be because women simply refused to behave as men demanded. In other words, there is so much literature on the ideal level because the behavior of women on the actual level so rarely conformed.

In addition to the above, there appears to be a frequent failure to come to grips with conflicting statements in a single account with the goal of resolving them. This failure may be related to the segmental personality, the situation-centered phenomena described by Hsu (1953; 1963) which I considered in Chapter VII. Several examples have been presented in this section but to emphasize the point, one more will be considered in some detail.

With regard to divorce, Ch'ing law states that a man can divorce a woman for seven reasons which are known as the Ch'i Ch'u or Seven Ousts: (1) Failure to serve the husband's parents and disobedience to them. (2) Failure to give birth to a son. (3) Dissoluteness of manners. (4) Jealousy. (5) Malignant disease. (6) Loquacity. (7) Larceny (Chui, 1966:61-8). Adultery is not listed here but was also a compelling reason for divorce. However, in the same law may be found the San Pu Ch'u or Three Non-Ousts, reasons why a wife cannot be divorced by her husband except on the grounds of adultery: (1) Mourned her husband's parents for three years. (2) Husband's poor family became rich after marriage. (3) She has no home to return to (Chiu, 1966:69-71). Chiu makes the point repeatedly that according to the law, men have "an exclusive right of divorce in ancient China" (1966:58). Even in divorce by mutual consent, traditionally permitted in China, the divorce is "effected in the name of the husband" (1966:60). Other scholars consistently agree, i.e., "divorce became exclusively the man's privilege and was practically equivalent to repudiation of the wife by the husband" (Lang, 1946:40).

However, a careful reading of Ch'ing law together with analysis of a sample of court decisions, does not support the above argument. All of the above facts are true but important omissions were made. The usual presentation implies the husband had the power to divorce his wife on the

grounds of any of the Ch'i Ch'u unless she possessed a San Pu Ch'u. Additional laws clearly point out that not all such divorces were optional, i.e., divorce was sometimes mandatory. For example, one law states, "He who fails to divorce a wife who has committed a crime involving a breach of the marital relationship, shall be subject to 80 strokes" (Chiu, 1966:95). In other words, if a woman violated one of the Ch'i Ch'u and her husband refused to divorce her, he would be punished by receiving 80 lashes. A wife who wanted a divorce could misbehave, accuse her husband of failure to divorce, and effectually cause him to be punished with 80 lashes. This could be repeated until the divorce was received. In other words, a wife did have the means to obtain a divorce but it was not as easy for her to initiate a divorce action as it was for her husband and the process also required her personal misbehavior. Both Chiu (1966:96) and Alabaster (1899:183) cite examples of mandatory divorces due to women's actions and Barclay (1954:210-37) suggests divorce was often initiated by females.

Most authors have ignored the above mandatory aspect of traditional Chinese divorce law. When a few have considered it, the seemingly overwhelming insistence on the primacy of male perogatives results in an illogical or incomplete account. Lang for example notes three kinds of divorce including "divorce by the compulsion of the authorities" in one section (1946:40) but denies it in another

section (1946:44), "Divorce, as already stated was entirely a man's privilege." But let me illustrate in greater depth with an extensive quotation from an otherwise scholarly account by a distinguished Chinese jurist and educator, Dr. Vermier Y. Chiu, Ph.D., D.C.L., Ll.B., M.A., Ph.B.:

> . . . the compulsory clause in the Ch'ing law of divorce, which makes it obligatory on the husband to divorce his wife when the latter is guilty of an offence involving a breach of the marital relationship which by law requires a divorce on pain of receiving 80 strokes on the buttocks if he fails to send her away, is both obnoxious and absurd. Whatever its motive might have been--such as, for instance, a desire to adhere to the doctrine of the "Three Obediences and Four Virtues of Women," to preserve the unity of the clan and to maintain the harmony of the family--the clause referred to is fraught with misgivings. In the first place, it is inconsistent with the husband's exclusive right of divorce, and in fact it interferes with his discretionary power of exercising or not exercising that right. Secondly, if the husband is magnanimous and has forgiven his wife who has been guilty of a crime involving a breach of the marital relationship--such as adultery, for instance, which is considered an unforgivable offence tending to disrupt the unity of the clan, disturb the harmony of the family and bring disrepute upon the husband--it will be highly ridiculous for the law to interfere and punish him for his magnanimity and his readiness to forgive, both of which are virtues respected by every Chinese. Besides, the clause in question is likely to encounter difficulties in enforcement because any deliberate act tending to alienate the affection of husband and wife is deemed an iniquity in China and magistrates are not, in conscience, too ready to take the responsibility upon themselves to forcibly sever husband and wife who are determined not to be separated.

Dr. Chiu recognizes that the law is "inconsistent with the husband's exclusive right of divorce." However, instead of logically concluding that this necessarily means man does not have an exclusive right to divorce, he calls the law

"obnoxious and absurd" and "fraught with misgivings" which it may well be but this is irrelevant to the fact of exclusiveness. As is quite clear from the facts, man does not have exclusive rights to divorce in China and as far as I am able to determine, he never did have exclusive rights but since acknowledgement of other than complete right of males to divorce would be inconsistent with the theme of the Great Tradition which emphasizes the male perogatives, it is nearly impossible for the scholar to either confront or overcome the exceptions. Instead, there will be a tendency previously discussed in conjunction with cognitive dissonance theory to either "deny the facts which are not in agreement with the previous knowledge" as is illustrated immediately above in the example of Chiu or to ignore the contrary evidence entirely as in Lang's discussion of divorce (1946).

Conclusions and Suggestions for Future Research

The Great Tradition of China maintains that the social position of women is extremely low when compared to the social position of men. I have demonstrated by means of a case study of a contemporary Chinese community on Taiwan that women do have a lower status than men but that the differences are not as great as would be expected from a cursory examination of the literature and moreover, that many women play roles simply not permitted by the supposed value system, i.e., household head, political official, potmaster,

sc
th
ar
o
t
r
S

school board official, etc. It is further demonstrated that although changes leading to increased status for women are in process, even at the time when the village was originally established, women were playing roles similar to those found today, i.e., the changes are quantitative rather than qualitative in most respects. In summary, Sanlei Ts'un is not congruent with the patterns portrayed in the traditional literature.

As suggested at the beginning of this chapter, this deviancy from traditional patterns might be explained on the basis that Sanlei was not like most Chinese communities. In order to refute these possibilities, Sanlei was tested for its degree of uniqueness by comparing it with other Chinese communities in space and time. Women's labor was found to be important in most rural Chinese communities and special tasks in cottage or factory industries or in connection with certain crops such as tea or silk were commonly assigned to women in many other communities. In any major attribute such as the value of labor contribution, family size, practice of religion, etc., Sanlei did not appear to be unique. That is, the village was a unique combination but the general patterns were found in many other villages whether separated by time or by space. Rates of some items varied (when provided) but such practices as adopted-in husbands, neolocal residence, girls fleeing to the city for work, etc., were found everywhere. Sanlei did not seem

sufficiently different from other Chinese villages to support any claim that the research results were not reasonably applicable to an understanding of women's roles for much of China.

Therefore, an assumption was made that the null hypothesis, i.e., the nature of women's roles discovered in Sanlei were accurate and that the Great Tradition was wrong was confirmed. Anthropological ethnographies and traditional accounts were re-examined in minute detail for supporting and refuting evidence. Only rarely did any generalized statement or summary support the assumption (Hu Shih, 1934:104-5), but there were multitudes of concrete facts which were highly supportive of the assumption. Indeed, it appeared that the more carefully collected the data and the more detailed and concrete the presentation, the greater the support for my description of the role of women in Chinese society. Whenever an author included both good data and summaries pertaining to women's roles, the two were often in disagreement as previously demonstrated. However, in most cases, material which would bear directly on the problem focus of the paper were simply omitted.

For example, in an excellent detailed Chinese ethnography of a single rural village, Fei discusses some of the relationships with the chia, particularly in reference to parents and children (1939:34-8) and daughter-in-law to mother-in-law (1939:45-50). He discusses marriage

(1939:40-45) but has little material on authority patterns between husbands and wives. In the discussion of the daughter-in-law, Fei stresses her relationship with her mother-in-law and completely ignores the role of the father-in-law in the home and only briefly discusses the combined role of son-husband in such as his duty to support his mother in a conflict between the two women in the household and his occasional failure to fulfill this obligation (1939:49). Although Fei claims "the mother-in-law represents authority," this summary interpretation is not extended to the whole complex of roles found in the household but only to the daughter-in-law. Interestingly, he does provide a typology of the 359 families in the village (1939:29) and it appears that there are only 12 which certainly have a mother-in-law daughter-in-law relationship in the home and 138 more which might have, i.e., only 12 households (3.3%) are fully extended and 128 households (38.4%) have a married couple plus extended relatives, some of whom may be mothers-in-law. In other words, he omits consideration of the most common patterns of authority relationships to be found in the home and concentrates on the role of the mother-in-law dominating her daughter-in-law although this pattern must be a minority pattern in village households. Consideration of the omitted material might support the ideals of the Great Tradition, i.e., male dominance, but I suspect women in Kaihsienkung are or were actually playing roles similar to those reported in Sanlei.

Now that the particular problem of conflicting interpretations of the nature of female roles in Chinese society has been identified, future field research hopefully will settle the issue. As more scholars focus on the role of women,[9] both in current field research and reconsideration of previous data, I am sure that my delineation of the nature of women's roles will be confirmed.

There is a larger problem of which this whole case is merely an example, how did such errors of interpretation occur and what can be done to prevent similar errors in the future? The mechanism leading to misinterpretation was suggested in the introductory chapter and is briefly reviewed below:

> 1. Every civilization has a Great Tradition expressed in a literary record which sets forth the society's "ideal" value system.
>
> 2. Indigenous scholars and foreign anthropologists alike become steeped in the "ideal" culture delineated in the Great Tradition.
>
> 3. As explained by means of cognitive dissonance theory, it is extremely difficult to overcome a belief once it is internalized, i.e., evidence which is contrary to existing knowledge will be denied.
>
> 4. Therefore, it is likely that both evidence and conclusions derived from research in civilizations by "experts" in the culture will be unconsciously biased in favor of the Great Tradition.

In addition to the above, there is a kind of style in anthropological research which contributes to the problem: an emphasis on social organization and social structure. There has been an attempt to find and describe that which persists

in the dynamics of relationships between people. There is no necessary causal relationship between a structural approach and an emphasis on "ideal" culture rather than "actual" culture[10] with a concomitant dismissal of exceptions. Nevertheless, there tends to be a strong positive relationship. According to Firth (1951:31), some anthropologists have attempted "to see a social structure in sets of ideals and expectations alone." Firth goes on to distinguish between structure and organization, largely on the basis that social structure is timeless, persisting, and not concrete (1951:31-40).

Marion Levy provides one of the most convincing demonstrations of the anthropological emphasis on "ideal" rather than "actual" culture patterns (1965:1-63). In essence, Levy claims that the vast majority of the population in any society is likely to spend the bulk of their lives in elementary family units. Nevertheless, anthropological accounts are likely to focus on the cultural ideal, i.e., the unilineal extended or polygynous household, which constitutes a small minority and seemingly ignore the dominant (in terms of quantity) pattern.

I would suggest that the number of misinterpretations could be reduced by the following techniques: (1) enumeration of rates and cases, (2) a processural approach, (3) reduced emphasis on a single culture, and (4) comparative field studies by non-specialists. Each is explained and

discussed briefly in turn below.

The enumeration of examples and/or rates would increase confidence in the author's abstraction or summary. For example, assume an investigator reports that the oldest male in the senior generation is usually the head of the lineage. Doubt derives from the term usually. The information that there were but three exceptions out of 225 surveyed lineages would produce a picture quite different from a statement there were 100 exceptions. We would feel the latter, at least, required explanation and the author would also likely feel some constraint not to dismiss the exceptions. I am also assuming the original author is particularly sophisticated and thorough for he added a key word in the original statement, "usually." In fact, we often find absolute statements in the anthropological literature while there are few absolutes in real social life.

To illustrate this point consider one example from Fei Hsiao-tung whom I regard as a competent and honest anthropologist. In one ethnography he claims an expanded family is "the basic social group in the village" (1939:27), but after discussing its importance, he does provide the data that this basic group constitutes less than ten per cent of the village families (1939:28). It is only because of his thoroughness and enumeration of cases that we discover his apparent dismissal of 90% of the data in favor of the 10% which exemplifies the Great Tradition. It is

probably true that the extended family is the "ideal" social group in the village Fei studied. Fei's concrete data (1939:29) claiming 223 of 359 families contain a single married couple and 99 more do not include a married couple at all does not support his argument the extended family is "basic," at least on the "actual" level.

In the processural approach, extensive detailed case studies often provide enough data for a second investigator to make his own analysis rather than relying on the presented abstractions and more than one interpretation should aid in preventing errors. In each historical case of a restudy of the same community by different anthropologists, i.e., Lewis and Redfield or Goodenough and Fisher, contrary interpretations have been offered. Presentation of extensive detailed case studies which is characteristic of the processural approach permits a kind of restudy because it is one level closer to the actual social facts than is normally presented, i.e., observation rather than interpretation. In other words, there are social events which occur in the village; the anthropologist records these more or less completely in his field notes; and finally, he usually furnishes an interpretation in his presentation. In many accounts, we rely primarily on the interpretation of the anthropologist. In accounts featuring a processural approach, we often find the extended observational reports which furnishes, so to speak, an

examination of the author's field notes. These may still be incomplete, i.e., the reporter was a poor observer, or they may be unrepresentative, i.e., the author has not selected the proper cases, but nevertheless, they are less abstract and closer to reality than most former approaches.

As a secondary effect, the processural approach which includes "real" cases rather than mere abstract principles will aid in the misplaced concreteness on "ideal" culture.

The third and fourth suggestions are two sides of the same coin. A traditional belief in anthropology is that some research should be conducted in a society other than the society in which the investigator was originally enculturated. It appears that it may be possible for the anthropologist to become socialized in terms of the Great Tradition of the society under consideration to such an extent that he loses the objectivity which constituted the rational for the original insistence on cross-cultural research. Yet, history and the Great Tradition are sufficiently complex to require years to master reasonably and so important that they cannot be ignored. This apparent impasse may be overcome by (a) developing specialists in great civilizations but strongly encouraging them to conduct field research in a third culture to provide comparatively-derived objectivity, and (b) encouraging anthropologists to conduct field research in a Great Civilization in which they are non-specialized. In other words, the

a
t
i
A
w
n
fu

cr
ni
ma
ma
pr
ti
pes
gis
wit
tec
and
ant
rep
194
the
(Fr
cla

anthropological study of China would likely be improved if the Sinologist were more often to punctuate his research in China with a venture into another area such as India or Africa and if a specialist in Indian or African cultures were more often to conduct a field study in China. Too narrow a specialization in one society is probably dysfunctional for anthropology as it is currently practiced.

Finally, as anthropology matures, it is becoming increasingly concerned with research methodology and techniques. It is possible to go too far down this road which may become a blind alley as perhaps has happened in mathematical sociology and experimental psychology. Yet, we have probably not gone far enough. I believe the above suggestions would eventuate in improvements but I am not unduly pessimistic with reference to the ability of anthropologists specializing in great civilizations to break through with new interpretations of cultural material using current techniques. For example, in spite of the Great Tradition and the concomitant problems such as those discussed above, anthropological sinologists have recently "discovered" and reported the true composition of the Chinese family (Hsu, 1943), the importance of affinal relatives (Gallin, 1960), the nature of lineage organizations in South Eastern China (Freedman, 1958; 1965), and the nature and importance of clans and lineages in the urban areas (Fried, 1968). The

na

di

so

nature of female roles in Chinese society presented in this dissertation should add to our understanding of Chinese society in spite of the contrast with "The Great Tradition."

NOTES

Chapter I: Problem and Approach

1 The role of women as portrayed in the traditional literature is abstracted more fully later in this Chapter and in Chapter X.
2 The concept of the "Great Tradition" and the "Little Tradition" are explicated in Redfield (1956).
3 Although the emphasis on the word typical was not in the original presentation, the term was used in the title and the introductory remarks.
4 The concept of "social distance" was developed by Bogardus to measure the degree of closeness or acceptance members of one group feel towards members of other groups (1958; 1959).
5 See Chapter V for a fuller discussion of the nature and function of sworn brothers associations which are perceived as pseudo-kinship groups.

Chapter II: The Setting

1 Although the population figures for Sanlei reflect the actual residence in the village, those for Talei Li are based on registration records in the township office and therefore are inaccurate as will be discussed.
2 "Restoration" is the official term employed to refer to the passing of control from the Japanese to the Chinese and the anniversary date is currently a national holiday celebrated with appropriate rituals.
3 For more complete accounts of the history of Taiwan, any of the following could be consulted: Davidson (1903), Grajdanzev (1942), Riggs (1952), Barclay (1954), Hsieh (1964), Kerr (1965), or Koo (1968).
4 Because of the Communication Bureau and a secret military base in the area, most government information was restricted for security reasons. Although we were not permitted to examine the local histories, an official briefly summarized them for us orally. Similar procedures were in effect for all other data except that we were permitted one day to examine household registration records for our two villages only in the township office and one day, the same for the land registration in the land office. Family histories are not very accurate but because of the shallow depth of the

settlement, older informants had heard tales of the founding directly from the original migrants.

5 G. Myrdal explains that under British control, the petty officials at lower levels were usually members of the indigenous population and higher levels were British. There were also attempts to work through the previous political infrastructure. He contrasts this with the French rule in Vietnam where almost all levels were controlled by the French and therefore, had the highest ratio of foreign officials to indigenous citizens in the East (1968:123-4,187-9). L. Mair (1969:32) also stresses indirect rule as a general British policy in most colonial territories. Taiwan appears intermediate between the French and British extremes for almost all government officials were Japanese, but the traditional local infrastructure of political control continued to be important.

6 The pao chia system is based on a Chinese imperial edict in the eighteenth century but it is far from clear how it was applied for conflicting data exists from various areas (Freedman,1958:65). It appears to be a system of units organized in hierarchal order to maintain control. In Taiwan under the Japanese, it functioned as follows: each chia (family or household) had a chia chang (head) who was responsible for the actions of its members. About ten contiguous chia were combined into lin headed by a lin chang (neighborhood leader) who was selected by a process of consensus and held responsible for the lin. About ten lin were combined into pao with an elected or appointed pao chang (head or mayor) responsible for communicating and carrying out government programs. Each pao consisted of about 100 chia. Since there were more than 150 chia in Talei Li, it was split into two pao.

7 The average rate for all Europe is about 10 and for North America, just over 9 (United Nations Demographic Yearbook,1966:103). The lower rate in Taiwan is primarily due to its relatively young population.

8 Early in the Twentieth century, flour was sacked in colorful cotten bags as a sales promotion device in the United states. The material was salvaged to make clothes which were very similar to underclothes now worn in Taiwan in terms of color and patterns.

Chapter III: The Economic Base

1 P'eng lai and tsai lai are both generic names for a large set of sub-varieties.

2 To facilitate comprehension, all dates in this chapter are furnished according to the Western solar calendar. The lunar calendar is extremely important for village affairs and is considered in Chapter IX.

3 The basis of the relationship between the tea farmer and tea processor is much more than an economic one and is considered more fully in Chapter VI.
4 Rice is the general term for all food in the same sense that bread is use in the Western world as illustrated by the phrase, "Give us this day our daily bread."
5 The hu (household) is more adequately defined in Chapter V where it is contrasted with the chia (family).
6 Patrilocal and matrilocal are employed with traditional meanings. The local variations are considered more fully in Chapter V.

Chapter IV: Formal Social Organization and Social Control

1 In the recent election of December 20, 1969, several additional seats in the National Assembly and the Legislative Yuan were assigned to Taiwan.
2 Subsequent to the study, Taipei was detached from the province and made a "Special Municipality" which is virtually equal to provincial status.
3 For more details on the pao chia system, see Note 6 to Chapter II.
4 Most people who have enjoyed any reasonable level of financial success have invested in land. A minimal level of financial success appears to be a criteria for a leadership position. Since one goal of a man is to earn a living, by definition, a poor man must be considered ineffective and how could an ineffective man be a village leader?
5 For an extended discussion of Kan Ch'ing and its effects on Chinese social structure see Fried (1953: 102-3).
6 A "chop" is a block on which the owner's name (in characters) is carved and which is dipped into an ink pad and used to stamp signatures on documents. It is considered to be more binding than a hand written signature and is the usual form which appears on checks and legal documents.
7 The means of interpreting the shen pei which are used to question the gods are discussed more fully in Chapter VII.

Chapter V: Kinship

1 Although considered briefly in Chapter VII, for further elaboration, see Hsu (1949), C. K. Yang (1967) or L. Thompson (1964:34-53).
2 Where possible, this will be a kinship term such as son, brother's wife, etc., but if there is no kinship relationship, the listing will be "live together."
3 Although Lang uses the term "joint family," it appears that her explanations are more in accord with the

L

5

6

7

8

9

10

11

12

13

Cha

1

2

modern use of the term, "extended family."

4 The reader is referred to the original article for the detailed analysis. In brief, the restraints are related to the fact that a Stage III society is large, complex, and possesses a large number of various role specializations.

5 This would assume that the "ideal" is larger than a nuclear unit; otherwise there would be no pressure for a change.

6 The increased prosperity is demonstrated for both Taiwan as a whole and for the subject village in particular in Chapter III.

7 It will later be demonstrated that the biological constraints may be overcome by such traditional practices as adoption and matrilocal marriage.

8 The role of the potmaster and assistant potmaster are considered more fully in Chapter VI and a description of a recent Fire Purification Ceremony may be found in Chapter VII.

9 The significance of the ancestral pot or censer is discussed in the last part of this chapter.

10 For example, Morioka (1967:595-606) reports the number of stages for the family cycle in the United States is nine, Japan three, and China four. Each investigator for a single society often sets out his own conception of the number of stages so that there is little agreement. Glick and Parke (1967:187-8) for example, claim the United States has six stages rather than the nine cited above.

11 No villagers participate in the Liao temple affairs and no one could direct me to it. The last visit was over ten years previous to my study when Liao Mo-tu copied down the next four words in his poem. He went with a Liao in Hsin Tien who is now dead. Liao did tell me we could probably find it if we just ask enough people surnamed Liao for someone was sure to know.

12 There were two levels of people named Liao. One was merely those who possessed the same surname and were called ch'in tang. The other level included those who shared a known ancestor (demonstrated descent) and were called ch'in tsu although I found that in actual practice, either term might be used interchangeably. Tsu has been translated as both clan and lineage.

13 Feng shui (geomancy, literally wind and water) is discussed more completely in Chapter VII.

Chapter VI: Voluntary Associations

1 The "Fire Purification Ceremony" is an important religious event periodically held in the area and is described in Chapter VII.

2 Gods are used in the same manner employed by people in the village. Westerners might call them god's statues

[redacted]

but the statue is something more than a mere representation, it actually possesses some of the god's essence (See Chapter VII).

3 Shen pei may be used to question the gods with a fifty per cent probability of success (See Chapter VII).

4 Potmasters and assistant potmasters (the pot refers to the bowl which holds the ash of an incense stick) are considered in Chapter VII.

5 This is usually an informal village leader or elected official. The current li chang (mayor) lives in Sanlei and is often an ex officio member of various temple committees, particularly in connection with the financial records. The membership appointment is on a consensus basis rather than on the "god's selection" as with the shen pei.

6 For example, many villagers unfairly blame him for the loss of the temple-owned land during the Land Reform programs of the national government. Villagers believe a good head could have circumvented the law.

Chapter VII: Religion

1 The explanation to follow in game theory is not, to my knowledge, original but I am unable to recall where I first heard it.

2 In terms of game theory, answers to the two questions allow a four-celled double binary outcome. A rational player will attempt to maximize his gain and simultaneously, minimize his loss (a minimax solution). The only logical choice is thus to be a believer.

3 According to Joseph Payne, an American who has made a hobby of collecting and identifying photgraphs of god's statues on Taiwan with the aid of Fr. Michael of the Asian Studies Department, Sophia University, one of the two appears to be an aborigine god. Two older men in the village claimed this was impossible but were not able to offer an alternative explanation.

4 Pai pai is either a bow or a dipping of the hands or both simultaneously but the term has been generalized to refer to all worship activities for a single affair and to the party and dinner which may be a part. In this latter respect, someone will say he is going to a pai pai, meaning, he is going to a party.

5 The incense pot or censer (hsiang lu) is a receptacle which holds ash from burnt incense sticks. When new sticks are lit, they are thrust into the ash for support in an upright position while burning. The ash may only be discarded on special occasions with proper ritual.

6 Of the remaining two spirits, one goes to hell and one to the grave (Gallin,1966:220).

7 As a term paper project in my undergraduate class, the late Joseph Payne conducted 50 surveys of ancestral shrines in the city of Taipei and found only 37 had ancestral tablets but all 50 had censers.

8 The question as to whether or not Confucianism is a religion has not yet been settled (C.K.Yang,1967:26-7). Villagers believe that Confucius is a god who has the power to do good.

9 "Bad-hearted" is a literal translation. The idea which is conveyed seems to be a combination of insincerity and impropriety. On the other hand, a "good-hearted" person is usually one who does the right thing at the right time, quietly and modestly.

10 When invited to a wedding, the guest is expected to pay an amount in cash (enclosed in a red envelope) which is sufficient to cover the cost of his food and drink. The size of the donation which is proper varies but an informal communication system conveys the amount. I use donation advisedly for in practice, one often does not recieve the formal invitation until after the donation has been delivered.

Chapter VIII: The Life Cycle

1 Subsequent to the completion of the study, the change to nine years has been officially inaugurated.

2 The children sleep in bed with their parents until about age ten (See subsequent section of this chapter).

3 He was often consulted by other villagers with regard to the accuracy of some line of poetry or quotation from the classics.

4 Wine houses serve drinks and food along with entertainment by prostitutes. Although use is made of the prostitutes, many trips are merely to drink, eat, and joke with the girls while sitting at a table with male friends.

5 There are a very few wealthier families who celebrate a man's fiftieth birthday.

6 Over age 60, everyone is considered to be old. Some people argue that old age commences at age 50.

7 This would mean that the 60th, 80th, and 100th are more important than the 70th or 90th although the increment of importance added by the greater age overwhelms the differences from the belief in numbers.

8 No one was sure what would be the nature of a ceremony for a married person who died young without having any children. The only cases of married barren people in recent memory were all those who married late in life and were both poor and with a small network of kinsmen. The ceremonies in each case were simple but this could be related to the latter two factors rather than the lack of descendants alone.

Chapter IX: Cycles in Time

1 The date for celebrating the traditional religious holidays is determined by the lunar calendar and the modern national holidays, i.e., Restoration Day, Chiang Kai-shek's Birthday, etc., by the solar calendar.
2 See Burkhardt (1955: Volume II, Appendix II) for a complete diagram of the Ten Celestial Stems and Twelve Earthly Branches which are combined to make the full sixty-year cycle which takes its name from the first term, chia tzu.
3 There are poems and short books which specify the nature of each of the animals much on the order of the astrological horoscopes in the West. Since an animal is repeated every twelfth year, the year of a man's animal is considered extra lucky.
4 Under the Japanese, there was a policy of celebrating solar New Year while the Chinese emphasize lunar New Year. In the latter part of the occupation, there was some celebration of both dates but in the village at present, little attention is paid to the solar New Year.
5 The particular date, exactly 105 days after the Winter Solstice, varies.
6 Repetition of a word changes it meaning in Chinese; in the case of nouns or adjectives for example, the strength of the power or quality is increased.
7 Normally, baths are only taken in the evening after dinner is over and the day's work is complete although most people wash in the morning.
8 Negative numbers are yang and positive numbers are yin in one scheme but more commonly, even numbers are yang and odd numbers are yin.

Chapter X: Summary and Conclusion

1 The only occupations traditionally open to women were concerned with procreation and sexual life: matchmaking, prostitution, procuressing, and midwifery (Lang,1946:42).
2 The data is recorded in a family history and another family history she is said to have brought up to date contains a sample as does a memorial board she is said to have prepared.
3 Naturally this ignores the obvious and necessary physiological differences between the two sexes.
4 This is based on an assumption that children were most likely in school between the ages of six and twelve.
5 A man in T'oulei once won a government lottery and invested the entire large amount in land.
6 There are many existing biographies of the emperor's consorts. For a review of palace intrigues occurring

[redacted]

in one short period of history and which emphasizes women's roles, see H. Levy (1958).

7 For example, a woman is the actual domineering head of the household and a major character in the greatest of all Chinese novels, Dream of the Red Chamber.

8 Norma Diamond of the University of Michigan is currently conducting research into women's roles in Taiwan and Margery Wolf, author of House of Lim is doing a study of women's roles based on field work conducted previously in Taiwan.

9 See discussion of M. Levy's approach to family composition in terms of the "ideal" versus "actual" level in Chapter V.

BIBLIOGRAPHY

Alabaster, Ernest
1899 Notes and Commentaries on Chinese Criminal Law. London: Luzac and Company.

Albrecht, Ardon and Go Sin-gi
1965 A Guidebook for Christians on Taiwanese Customs and Superstitions. Taipei, Taiwan: Evangelical Lutheran Church Mimeograph.

Asch, Solomon E.
1955 "Opinions and Social Pressure." Scientific American, Vol. 193, No. 5, 31-5.

Baker, Hugh D. R.
1968 A Chinese Lineage Village: Sheung Shui. Stanford: Stanford University Press.

Barclay, George W.
1954 Colonial Development and Population in Taiwan. Princeton: Princeton University Press.

Bavelas, Alex
1950 "Communication Patterns in Task-Oriented Groups." Journal of the Acoustical Society of America, Vol. 22, 725-30.

Benedict, Ruth
1934 Patterns of Culture. New York: New American Library.

Bessac, Frank B.
1964 "Some Social Effects of Land Reform in a Village on the Taichung Plain." Journal of the China Society, Vol. IV, 15-28.

1965 Research Concerning the Social Consequences of Land Reform on Taiwan. (Unpublished Manuscript).

Bloodworth, Dennis
1966 The Chinese Looking Glass. New York: Dell Publishing Company, Inc.

Bodde, Derk
1946 "Dominant Ideas." In China, Harley F. MacNair (Ed.). Berkely and Los Angeles: University of

California Press.

1957 China's Cultural Tradition: What and Whither. New York: Holt, Rinehart and Winston.

Bogardus, Emory S.
1958 "Racial Distance Changes in the United States During the Past Thirty Years." Sociology and Social Research, Vol. 43, 127-35.

1959 "Racial Reactions by Regions." Sociology and Social Research, Vol. 43, 286-90.

Broom, Leonard and Selznick, Philip
1955 Sociology, Third Edition. New York: Harper and Row.

Buchler, Ira R. and Selby, Henry A.
1968 Kinship and Social Organization: An Introduction to Theory and Method. New York: The MacMillin Company.

Buck, J. Lossing
1930 Chinese Farm Economy: A Study of 2866 Farms in Seventeen Locations and Seven Provinces in China. Chicago: University of Chicago Press.

Burkhardt, V. R.
1953-1958 Chinese Creeds and Customs. 3 Vols. Hong Kong: South China Morning Post, Limited.

Caplow, Theodore and McGee, Reece J.
1962 The Academic Marketplace. New York: Basic Books.

Carroll, Thomas D.
1962 "The Hidden Significance of the I Ching Diagrams." Journal of the China Society, Vol. II, 31-49.

1963 "Some Cyclical Characteristics of Chinese Astrology." Journal of the China Society, Vol. III, 4-21.

Chang Kwang-chih
1956 "A Brief Survey of the Archaeology of Formosa." Southwestern Journal of Anthropology, Vol. XII, 371-83.

Chang Yen-t'ien
1954 Land Reform in Taiwan. Taichung: Department of Agricultural Economics, Taiwan Provincial College of Agriculture.

Chen, C.
1961 Land Reform in Taiwan. Taipei: China Publishing

Company.

Chen Kao-tang
1967 "Taiwan Thrust." Far Eastern Economic Review, January 19, 96-104.

Chen Shao-hsing
1963 "Pattern of Fertility in Taiwan: Report of a Survey Made in 1957." The Journal of Social Science, Vol. 13, Taipei, Taiwan: College of Law, National Taiwan University.

China Yearbook: 1966-67
1967 Taipei, Taiwan: China Publishing Company.

Chiu, Vermier Y.
1966 Marriage Laws and Customs of China. Hong Kong: Institute of Advanced Chinese Studies and Research, New Asia College, The Chinese University of Hong Kong.

Coale, Ansley J.
1965 "Estimates of Average Size of Households." In Aspects of the Analysis of Family Structure, Coale, et al. Princeton: Princeton University Press.

Cohen, Myron L.
1969 "Agnatic Kinship in South Taiwan." Ethnology, Vol. VIII, No. 3, 167-82.

Cooley, Charles Horton
1909 Social Organization. New York: Scribner's.

Coughlin, R. J.
1960 Double Identity: The Chinese in Modern Thailand. Hong Kong: Hong Kong University Press.

Cressey, George B.
1955 Land of the 500 Million: A Geography of China. New York: McGraw-Hill Book Co.

1964 Asia's Lands and Peoples. New York: McGraw-Hill Book Co.

Crook, David and Crook, Isabel
1959 Revolution in a Chinese Village: Ten Mile Inn. London: Routledge and Kegan Paul Ltd.

1966 The First Years of Yangyi Commune. London: Routledge and Kegan Paul Ltd.

Davidson, James W.
1903 The Island of Formosa, Past and Present. New York: MacMillan and Company.

DeGroot, J. J. M.
1892-1910 The Religious System of China. 6 Vols. Leyden: Brill.

Department of Information, Taiwan Provincial Government
1962 Redemarcation of Land in Taiwan. Taipei, Taiwan.

Diamond, Norma
1969 K'un Shen: A Taiwan Village. New York: Holt, Rinehart and Winston.

Durkheim, Emile
1949 The Division of Labor in Society. Translated from the French by George Simpson. Glencoe, Ill.: The Free Press.

1951 Suicide. Translated from the French by George Simpson. Glencoe, Ill.: The Free Press.

Eggan, Fred
1954 "Social Anthropology and the Method of Controlled Comparison." American Anthropologist, Vol. 56, 734-63.

Eichorn, Werner
1964 Chinese Civilization. Translated from the German by Faber and Faber Limited. New York: Frederick A. Praeger, Inc.

Elliott, Alan J. A.
1955 Chinese Spirit- Medium Cults in Singapore. London: Published for Department of Anthropology, The London School of Economics and Political Science.

Embree, John F.
1939 Suye Mura, A Japanese Village. Chicago: University of Chicago Press.

Emery, Robert F. and Lee, Henry F.
1967 "Economic Trends in Asia in 1966." Asian Survey, Vol. VII, 807-23.

Epstein, A. L.
1967 "Editor's Preface." In The Craft of Social Anthropology, A. L. Epstein (Ed.). London: Tavistock Publications.

Evans-Pritchard, E. E.
1940 The Nuer. London: Oxford University Press.

Fa

Fa

Fa

Fe

Fe

Fe

Fi

Fo

Fa

Fr

Fairbank, John K.
1948 The United States and China. New York: The Viking Press.

Fairbank, John K. and Reischauer, Edwin O.
1958 East Asia: The Great Tradition. Boston: Houghton Mifflin Company.

Farrell, Raleigh
1964 Linguistic and Archaeological History of Taiwan. (Unpublished Manuscript).

Fei Hsia-tung
1939 Peasant Life in China. London: Kegan Paul, Trench, Trubner and Co., Ltd.

Feng Han-yi (Feng Han-chi)
1948 The Chinese Kinship System. Cambridge, Mass.: Harvard-Yenching Institute, Harvard University Press (Reprinted from Harvard Journal of Asiatic Studies, Vol. II, No. 2, July, 1937).

Festinger, Leon
1957 A Theory of Cognitive Dissonance. Stanford: Stanford University Press.

Firth, Rayomnd
1951 Elements of Social Organization. London: Watts and Co.

Fortes, Meyer
1949 The Web of Kinship Among the Tallensi. London: Oxford University Press.

1958 "Introduction." In The Developmental Cycle in Domestic Groups, J. Goody (Ed.). Cambridge Papers in Social Anthropology No. 1. Cambridge: Cambridge University Press.

Foster, George M.
1967a "What is a Peasant?" In Peasant Society: A Reader, Jack M. Potter, May N. Diaz, and George M. Foster (Eds.). Boston: Little, Brown and Company.

1967b "Peasant Society and the Image of Limited Good." American Anthropologist, Vol. 67, No. 2.

Franke, Wolfgang
1958 Das Jahrhundert Der Chineisischen Revolution 1851-1949. Munchen: R. Oldenbourg. Translated from the German by Franz Schurmann. (Reprinted in The China Reader: Imperial China, Franz Schurmann and Orville Schell (Eds.). New

York: Random House, Vintage Books .

Freedman, Maurice
1957 Chinese Family and Marriage in Singapore. London: Her Majesty's Stationery Office.

1958 Lineage Organization in Southeastern China. London: University of London, Athlone Press.

1963 "A Chinese Phase in Social Anthropology." British Journal of Sociology, Vol. I, No. 19, 1-19.

1966 Chinese Lineage and Society: Fukien and Kwangtung. London: University of London, Athlone Press.

Fried, Morton
1953 Fabric of Chinese Society, A Study of the Social Life of a Chinese County Seat. New York: Praeger.

1957 "The Classification of Corporate Unilineal Descent Groups." Journal of the Royal Anthropological Institute, Vol. 87, 1-30.

1966 "Some Political Aspects of Clanship in a Modern Chinese City." In Political Anthropology, Marc J. Swartz, Victor W. Turner, and Arthur Tuden, (Eds.). Chicago: Aldine Publishing Company.

Fukutake, Tadashi
1967 Asian Rural Society: China, India, Japan. Seattle: University of Washington Press.

Gallin, Bernard
1960 "Matrilateral and Affinal Relationships of a Taiwanese Village." American Anthropologist, Vol. LXII, No. 4, 632-42.

1966 Hsin Hsing, Taiwan: A Chinese Village in Change. Berkeley and Los Angeles: University of California Press.

1968 "Political Factionalism and Its Impact on Chinese Village Social Organization." In Local-Level Politics, Marc J. Swartz (Ed.). Chicago: Aldine Publishing Co.

Gamble, Sidney D.
1954 Ting Hsien: A North China Rural Community. Institute of Pacific Relations.

1963 North China Villages. Berkeley and Los Angeles: University of California Press.

Geddes, W. R.
1963 Peasant Life in Communist China. Ithaca, New York: Society for Applied Anthropology.

Geertz, Clifford
1962 "Studies in Peasant Life: Community and Society." In Biennial Review of Anthropology - 1961, Bernard J. Siegel (Ed.). Stanford: Stanford University Press.

Glick, Paul C. and Parke, Robert Jr.
1967 "New Approaches in Studying the Life Cycle of the Family." Demography, Vol. 2, 187-202.

Gluckman, Max
1964 Politics, Law, and Ritual in Tribal Society. Chicago: Aldine Publishing Company.

Goode, William J.
1963 World Revolution and Family Patterns. London: The Free Press of Glencoe, Collier-MacMillan Limited.

Goody, J.
1958 The Development Cycle in Domestic Groups. Cambridge Papers in Social Anthropology, No. 1.

Grajdanzev, Andrew J.
1942 Formosa Today. New York: Institute of Pacific Relations.

Gullahorn, John T. and Gullahorn, Jeanne E.
1963 "A Computer Model of Elementary Social Behavior." In Computers and Thought, E. A. Feigenbaum and J. Feldman (Eds.). New York: McGraw Hill.

1964 "The Computer as a Tool for Theory Development." In Uses of Computers in Anthropology, Dell Hymes (Ed.). Hague, Netherlands: Mouton and Company.

Hammel, E. A.
1961 "The Family Cycle in a Coastal Peruvian Slum and Village." American Anthropologist, Vol. 63, 989-1005.

Han Suyin
1966 "Social Transformation in China." In Contemporary China, Ruth Adams (Ed.). New York: Pantheon Books.

Heiss, Jerold
1968 "An Introduction to the Elements of Role Theory." Family Roles and Interaction, Jerold Heiss (Ed.). Chicago: Rand McNally and Company.

[redacted]

Herbert, Jean
1965 An Introduction to Asia. Translated from the French by Manu Banerji. New York: Oxford University Press.

Hoebel, E. Adamson
1960 The Cheyennes: Indians of the Great Plains. New York: Holt, Rinehart and Winston, Inc.

Hsiao Kung-chuan
1960 Rural China: Imperial Control in the Nineteenths Century. Seattle: University of Washington Press.

Hsieh Chiao-min
1964 Taiwan - Ilha Formosa. Washington: Butterworths.

Hsu, Francis L. K.
1943 "The Myth of Chinese Family Size." American Journal of Sociology, Vol. 48, 555-562.

1949 Under the Ancestors' Shadow, Chinese Culture and Personality. London: Routledge and Kegan Paul, Ltd.

1953 Americans and Chinese: Two Ways of Life. New York: Abelard-Schuman.

1963 Clan, Caste and Club. New York: Van Nostrand, Reinhold Company.

1969 The Study of Literate Civilizations. New York: Holt, Rinehart and Winston.

Hu Hsien-chin
1948 The Common Descent Group in China and Its Functions. New York: Viking Fund Publications in Anthropology No. 10.

Hu Shih
1934 The Chinese Renaissance. Chicago: University of Chicago Press.

Johnson, Raymond V.
1966 "A Northern Taiwan Village." (Unpublished Manuscript).

Kendler, Howard H.
1968 Basic Psychology. New York: Appleton-Century-Crofts.

Kerr, George H.
1965 Formosa Betrayed. Boston: Houghton Mifflin Company.

Kirby, E. Stuart
1960 Rural Progress in Taiwan. Taipei, Taiwan: Chinese-American Joint Commission on Rural Reconstruction.

Koo, Anthony Y. C.
1968 The Role of Land Reform in Economic Development: A Case Study of Taiwan. New York: Frederick A. Praeger.

Koyama, Takashi
1961 The Changing Social Position of Women in Japan. Geneva: UNESCO.

Kublin, Hyman
1968 China: Selected Readings. Boston: Houghton Mifflin Company.

Kulp, Daniel H.
1925 Country Life in South China. New York: Teacher's College.

Landesberger, Henry A.
1958 Hawthorne Revisited. Ithaca: Cornell University Press.

Lang, Olga
1946 Chinese Family and Society. New Haven: Yale University Press.

Latourette, Kenneth Scott
1959 The Chinese, Their History and Culture. New York: The MacMillan Company.

1964 China. Englewood Cliffs, N. J.: Prentice-Hall Spectrum Books.

Lee, D. J.
1967 "Chinese Women and Men." The China News, January 17, 2.

Lee, Rose Hum
1949 "Research on the Chinese Family." American Journal of Sociology, Vol. 54, 497-504.

Levy, Howard S.
1958 Harem Favorites of an Illustrious Celestial. Taichung, Taiwan: Chung-T'ai Printing Company, Ltd.

Levy, Marion J., Jr.
1949 The Family Revolution in Modern China. Cambridge: Harvard University Press.

1965 "Aspects of the Analysis of Family Structure." In Aspects of the Analysis of Family Structure, Coale, et al. Princeton: Princeton University Press.

1967 "The Role of the Family." In Chinese Society Under Communism: A Reader, William T. Liu (Ed.). New York: John Wiley and Sons, Inc.

Lin Yueh-hwa
1947 The Golden Wing, A Sociological Study of Chinese Familism. London: Kegan Paul, Trench, Trubner and Co., Ltd.

Linton, Ralph
1936 The Study of Man. New York: Appelton-Century-Crofts.

1945 The Cultural Background of Personality. New York: Appleton-Century-Crofts.

Liu Hui-chen Wang
1959 The Traditional Chinese Clan Rules. Locust Valley, New York, Association for Asian Studies Monograph No. 7.

Liu, Paul K. C.
1967 The Use of Household Registration Records In Measuring the Fertility Level of Taiwan. Translated from the Chinese by William L. Parish. Taipei, Taiwan: Academia Sinica, Institute of Economics, Economic Papers, No. 2.

Liu Su-feng
1966 Disguised Unemployment in Taiwan Agriculture. (Unpublished Ph.D. Dissertation, University of Illinois.)

Lockwood, D.
1964 "Ideal-Type Analysis." In A Dictionary of the Social Sciences, Julius Gould and William L. Kold (Eds.). New York: UNESCO.

MacKay, George Leslie
1896 From Far Formosa: The Island, Its People and Missions. New York: Fleming H. Revell Co.

Mair, Lucy
1969 Anthropology and Social Change. London School of Economics Monographs on Social Anthropology, No. 38. London: University of London, The Athlone Press.

Maretzki, Thomas and Maretzki, Hatsumi
1966 Taira: An Okinawa Village. Six Cultures Series: Vol. VII. New York: John Wiley and Sons, Inc.

Merton, Robert K.
1957 Social Theory and Social Structure. Glencoe, Ill.: The Free Press.

Mitchell, J. C.
1956 The Yao Village: A Study in the Social Structure of a Nayasaland Tribe. Manchester: University of Manchester Press.

Morioka, Kiyomi
1967 "Life Cycle Patterns in Japan, China, and the United States." Journal of Marriage and the Family, Vol. 29, 595-606.

Murdock, George P.
1957 "World Ethnographic Survey." American Anthropologist, Vol. LIX, No. 4, 664-87.

1967 "Ethnographic Atlas: A Summary." Ethnology, Vol. VI, No. 2, 109-236.

Myrdal, Gunnar
1968 Asian Drama: An Inquiry Into the Poverty of Nations. Three Volumes. New York: Pantheon.

Myrdal, Jan
1965 Report from a Chinese Village. New York: Pantheon.

Nadel, S. F.
1951 The Foundations of Social Anthropology. Glencoe, Ill.: The Free Press.

1957 The Theory of Social Structure. Glencoe, Ill.: The Free Press.

Nicholas, Ralph W.
1965 "Factions: A Comparative Analysis." In Political Systems and the Distribution of Power. London: Tavistock Publications, Association of Social Anthropologists, Monograph No. 2.

Nuttanson, M. Y.
1963 The Physical Environment and Agriculture of Central and South China, Hong Kong, and Taiwan (Formosa). Washington, D.C.: American Institute of Crop Ecology.

O'Hara, Albert R.
1955 The Position of Women in Early China. Hong Kong: Orient Publishing Company.

1962 "Changing Attitudes Toward Marraige and the Family in Free China." Journal of the China Society, Vol. II, 57-67.

1963 "The Confucian Ideal of Womanhood." Journal of the China Society, Vol. III, 76-83.

Okada, Uzuru
1949 Kiso Shakai - Elementary Groups of Society. Tokyo: Kobundo.

Osgood, Cornelius
1963 Village Life in Old China. New York: The Ronald Press Company.

Parsons, Talcott
1951 The Social System. London: Collier-MacMillan, Limited.

Pasternak, Burton
1967 Tatieh: A Study of Agnatic Atrophy and Village Integration. (Unpublished Ph.D. Dissertation, Columbia University).

1969 "The Role of the Frontier in Chinese Lineage Development." The Journal of Asian Studies, Vol. XXVIII, No. 3, 551-62.

Plummer, Mark
1967 "Chiang K'ai-shek and the National Assembly." In Studies on Asia, Sidney D. Brown (Ed.). Lincoln: The University of Nebraska Press.

1969 "Taiwan: The 'New Look' in Government." Asian Survey, Vol. IX, 113-31.

Potter, Jack M.
1967 "Introduction: Peasants in the Modern World." In Peasant Society: A Reader, Jack M. Potter, May N. Diaz, and George M. Foster, (Eds.). Boston: Little, Brown and Company.

1968 Capitalism and the Chinese Peasant. Berkeley and Los Angeles: University of California Press.

Radcliffe-Brown, A. R.
1952 Structure and Function in Primitive Society. Glencoe, Ill.: The Free Press.

P

P

P

P

P

S

S

S

S

Sr

St

Sw

Raper, A. F.
1953 Rural Taiwan - Problem and Promise. Taipei, Taiwan: Joint Commission on Rural Reconstruction.

Redfield, Robert
1930 Tepotzlán: A Mexican Village. Chicago: University of Chicago Press.

1956 Peasant Society and Culture. Chicago: University of Chicago Press.

Riesman, David
1950 The Lonely Crowd. New Haven, Conn.: Yale University Press.

Riggs, Fred W.
1952 Formosa Under Chinese Nationalist Rule. New York: The MacMillan Company.

Rokeach M. and Rothman, G.
1965 "The Principle of Belief Congruence and the Congruity Principle as Models of Cognitive Interaction." Psychology Review, Vol. 72, 124-43.

Sampson, R. V.
1964 "Tradition." In A Dictionary of the Social Sciences, Julius Gould and William L. Kolb (Eds.). New York: UNESCO.

Shen, T. H.
1964 Agricultural Development - Taiwan Since World War II. Ithaca, New York: Comstock Publishing Associates.

Siegal, Bernard J. and Beals, Alan F.
1960 "Pervasive Factionalism." American Anthropologist Vol. 62, 394-417.

Skinner, G. William
1957 Chinese Society in Thailand: An Analytical History. Ithaca: Cornell University Press.

Smith, Arthur H.
1899 Village Life in China. New York: Fleming H. Revell Company.

Straelen, H. V.
1936 The Japanese Woman Looking Forward. Tokyo: Kobundo.

Sweetser, Dorian A.
1964 "Role." In A Dictionary of the Social Sciences, Julius Gould and William L. Kolb (Eds.). New York: UNESCO.

Takekoshi, Yosaburo
1907 Japanese Rule in Formosa. Translated from the Japanese by George Brathwaite. London: Longmans, Green, and Co.

Tan Giok-lan
1963 The Chinese of Sukabumi: A Study in Social and Cultural Accomodation. Ithaca: Cornell University Press.

Tawney, R. H.
1932 Land and Labor in China. London: George Allen and Unwin Ltd.

Thelin, Mark and Li Wen-lang
1963 "Religion in Two Taiwanese Villages." Journal of the China Society, Vol. 3, 44-57.

Thompson, Laurence G.
1969 Chinese Religion: An Introduction. Belmont, California: Dickenson Publishing Company, Inc.

Thompson, Warren S.
1959 Population and Progress in the Far East. Chicago: The University of Chicago Press.

Topley, Marjorie
1968 "Chinese Religion and Rural Cohesion in the Nineteenth Century." Journal of the Hong Kong Branch of the Royal Asiatic Society, Vol 8, 9-43.

Tregear, T. R.
1965 A Geography of China. Chicago: Aldine Publishing Co.

Turner, Victor W.
1957 Schism and Continuity in an African Society: A Study of Ndembu Village Life. Manchester: Manchester University Press.

United Nations, Statistical Office
1968 Statistical Yearbook. New York.

United Nations, Statistical Office, Department of Economic and Social Affairs.
1967 Demographic Yearbook. New York.

Waley, Arthur
1941 170 Chinese Poems. London: Constable and Company.

Ward, Barabara E.
1954 "A Hong Kong Fishing Village." Journal of Oriental Studies, Vol. I, No. 1.

Wilkinson, H. P.
1926 The Family Life in Classical China. Shanghai: Press of Kelly and Walsh, Ltd.

Wolf, Arthur P.
1965 Marriage and Adoption in a Hokkien Village. (Unpublished Ph.D. Dissertation, Cornell University).

1966 "Child Association, Sexual Attraction and the Incest Tabu: A Chinese Case." American Anthropologist, Vol. 68, 883-96.

1968 "Adopt a Daughter-in-law, Mary a Sister: A Chinese Solution to the Problem of the Incest Tabu." American Anthropologist, Vol. 70, 864-74.

Wolf, Margery
1968 The House of Lim. New York: Appleton-Century-Crofts.

Wu, C. K. and Lee, T. D.
1963 The Demand for and Supply of Farm Labor of the Vocational Students. Taichung, Taiwan: Chung Hsin University.

Yang, Martin C.
1945 A Chinese Village, Taitou, Shantung Province. New York: Columbia University Press.

1962 "Changes in Family Life in Rural Taiwan." Journal of the China Society, Vol. II, 68-79.

1963 "Land Reform and Community Development in Taiwan." Journal of the China Society, Vol. 3, 65-75.

Yang, C. K.
1959a The Chinese Family in the Communist Revolution. Cambridge: Harvard University Press.

1959b A Chinese Village in Early Communist Transition. Cambridge: Harvard University Press.

1961 Religion in Chinese Society. Berkeley and Los Angeles: University of California Press.

GLOSSARY A

PROPER PLACE NAMES

二壘村	Erhlei (Erh Lei Ts'un)	四壘村	Szulei (Szu Lei Ts'un)
福建	Fukien	臺北	Taichung
河南	Honan	臺南	Tainan
新店	Hsin Tien	臺北	Taipei
花蓮	Hualien	臺中	Taitung
高雄	Kaohsiung	大壘里	Talei (Ta Lei Li)
基隆	Keelung	臺灣	Taiwan
廣東	Kwantung	頭壘村	T'oulei (T'ou Lei Ts'un)
裒地村	Pouti (Pou Ti Ts'un)	五壘村	Wulei (Wu Lei Ts'un)
三壘村	Sanlei (San Lei Ts'un)		

GLOSSARY B

CHINESE TERMS AND SHORT PHRASES

Characters	Romanization Mandarin	Romanization Taiwanese	English Equivalent
章	Chang	Chiu	Signature stamp
招夫	Chao fu	Chiao hu	Adopted-in husband
拆伙	Ch'ai hwo	Chiat hoe	Family division (Separation of stove)
招弟	Chao ti	Chiao ti	Adopt a child in order to attact a baby brother
旗袍	Ch'i pao	Tng sa	Tight-collared slit-sided dress
吉寿	Chi shou	Kea shu	Ninetieth birthday (senior longevity)
甲	Chia	Ka	Unit of land measure equal to about 2.39 acres
家	Chia	Ka	Family
家長	Chia chang	Ka taung	Head of family
甲子	Chia tzu	Ka' chu'	First term in the 60-year cycle of years, calandar
結拜兄弟	Chieh pai hsiung ti	Kea pai' hia ti	Sworn brothers association
斤	Chin	Kin	Unit of weight equal to about one and one third pounds
親戚	Ch'in Ch'i	Chhin Chiang	Affinal Relative

親堂	Ch'in t'ang	Chhin tung	Agnatic kinsmen by virtue of possession of a common surname
親族	Ch'in tsu	Chhin tsou	Agnatic kinsmen with demonstrated descent
清明節	Ch'ing ming chieh	Chin meng tast	Clear and Bright Festival
豬人	Chu jen	Ti lang	Village to-fu sales-man (pig man)
中秋節	Chung chiu chieh	Tiong chiu tast	Mid-Autumn or Moon Festival
中寿	Chung shou	Tiong shu	70th Birthday (mid-dle longevity)
中元	Chung yuan	Tiong kuang	Festival of the Hungry Ghosts
耳子	Erh tzu	Hi tsa	Handles on censer of ancestors (ears)
法師	Fa shih	Hoat su	Shaman
房	Fang	Bong	Branch of a Clan
風水	Feng shui	Fung tsui	Geomancy (wind and water)
府	Fu	Hu'	Government district
好兄弟	Hao Hsiung Ti	Ho hia ti	Good brothers (un-worshipped ancestors)
黑頭	Hei t'ou	O tao'	Priest important for funerals (black headed Taoist0
喜冲喜	Hsi chung hsi	Hei chon hei	Good counteracts good
稀飯	Hsi fan	Mei	Rice gruel
小寿	Hsia shou	Shia shu	60th birthday small longevity)
香爐	Hsiang lu	Hiu lo	Ancestral censer

Ch'in t'ang	Chin tang	
Ch'in tan	Chin tan	
Ch'ing mang shih	Chin mang tsai	
Chu jen	Ti jang	
Chung shih	Tiang tsai	
Chung shou	Tiong	
Chung yuan	Tiong koan	
Erh tan	Hi tse	
Fa shih	Hoat su	
Fang	Hong	
Fang shui	Fang tsui	Geomancy water
Fu	Hu'	Government district
Hao Hsiung Ti	Ho hia ti	Good brothers (unworshipped ancestors)
Hei t'ou	O tao'	Priest important for funerals (black headed Taoists)
Hei chung hsi	Hei chon hei	Good concentrate good
Hei lan	Hei	Hize Grass
Hsia shou	Shia shu	Sixth birthday (small longevity)
Hsiang lu	Hia lo	Ancestral center

新年	Hsin nien	Chian goeh	New Year
户	Hu	Hou	Household
紅頭	Hung t'ou	Han tao'	Priest important for curing illness (red-headed Taoist)
義警	I' Ching	I' Keng	Voluntary policemen
感情	Kan ch'ing	Koung chin	Emotional relationships or feelings
乾杯	Kan pei	Kan poe	A toast - bottems up
高鼻子	Kao pi tzu	To' phi a	Westerner (big nose)
觀音	Kuan yin	Kuamg yim	Goddess of Mercy
鬼	Kuei	Kuei	Malevolent divine powers
公廳	Kung t'ing	Kong Taing	Central room in house
國語	Kuo yu	Kok gi	Mandarin (national language)
里	Li	Li'	A political unit smaller than a township
里長	Li chang	Li' taung	Mayor (head of a <u>li</u>)
隣	Lin	Lin	Neighborhood, an official government unit
隣長	Lin chang	Lin taung	Head of a <u>lin</u>
爐主	Lu chu	Chan tsu	Pot master (official in charge of a religious ceremony)
滿月	Man yueh	Moun goeh	Ceremony for the 30-day-old baby (full month)
媽祖	Matsu	Ma tsou	An important goddess

Hsin chen	Chien yeng	[illegible]
Hu	Hou	[illegible]
Hung t'ou	Hsu [illegible]	[illegible]
I' Ching	I' Ming	[illegible]
Kan ch'ing	Kouang [illegible]	[illegible]
Kan pei	Kan poe	[illegible]
Kao pi tsu	To' pin [illegible]	[illegible]
Kuan yin	Kuang yin	[illegible]
Kuei	Kuei	[illegible]
Kung t'ing	Kong Teing	Tailor's house
Kuo yu	Kok yi	Mandarin language
Li	Li'	A political [illegible] smaller than [illegible] ship
Li chang	Li' teung	Mayor (head of a li)
Lin	Lin	Neighborhood, an official government unit
Lin chang	Lin teung	Head of a lin
Lu chu	Chan tsu	Pot master (official in charge of a religious ceremony)
Man yuen	Moun goeh	Ceremony for the 30-day-old baby (full month)
Matsu	Ma tsou	An important goddess

閩南話	Min nan hua	Tai oan oe	Southern min, a Chinese dialect
八字	Pa tzu	Peh li	Year, month, day, and hour of birth (eight characters)
拜拜	Pai pai	Pai' pai'	A ritual or the celebration part of a ceremonial event
半杯	Pan pei	Pang poe	A Toast - half a glass
保甲	Pao chia	Pou ka'	Traditional system of local government
蓬來	P'eng lai	Fung lai	Variety of rice
上寿	Shang shou	Shoung shu	80th birthday (high longevity)
上水	Shang shui	Siong tsui	Village neighborhood in Sanlei (above the water)
上元	Shang yuan	Shoung Kuang	Lantern Festival
神	Shen	Sin	Gods or good divine powers
神杯	Shen pei	Sin poe	Spirit sticks for communicating with the gods
神位	Shen wei	Sin we	Ancester or soul tablet
寿	Shou	Shu	Long life
養媳	Siaosiv	Yong shin Po	Adopted Daughter Marriage
隨便	Swei bien	Chhin Chhai	A toast - as much as you like
下水	Sya shui	Ha tsui	A village neighborhood in Sanlei (below the water)
香肉	Syang chou	Kou ba	Dog meat (fragrant meat)
大家庭	Ta chia ting	Tua Ka teng	Extended family

閩南話	Min nan hua	Tai oan ...	
八字	Pa tzu	Pat ...	
拜拜	Pai pai	Pai ...	
半仙	Pan pei	Pa.n xia	
北港媽祖	Pei ching	Pei ...	
丁香魚	Ting hsi	Ting ...	
上香	Shang hsi	Shang ...	
文旦	Shang shui	Siong ...	
元宵節	Shang yuan	Shiong Xuan ...	
神	Shen	Sin	Gods in general; power
神明會	Shen mei	Sin mie	Spirit medium; community; the gods
神位	Shen wei	Sin wi	Ancestral or tablet
神明	Shen	Sin	Long life
孝順	Hsiao shun	Yong sin po	Adopted Daughter; marriage
新娘	Hsin niang	Chin chiu chiai	A toast - as much as you like
新厝	Hsin tsu	Ha tsuo	A village neighborhood in Sanlai (below the water)
香腸	Hsiang chang	Xiu ba	Dog meat (freshness; meat)
大家族	Ta chia tsu	Tua Ka tsong	Extended family

GLOSSARY C

CHINESE SENTENCES AND LONGER PHRASES

你最知道 You know best.

不論你怎麼想 Whatever you think.

把鞋子放在床下 Putting the shoes under the bed.

把他们推在一起 Pushing them together.

我会太不安 I would be too embarrassed.

这不会很有趣 It would not be interesting.

今日的青年做更多的决定 Young people make more decisions now.

可能女孩比男孩有价值 Perhaps girls are worth more than boys.

那就跟豬一樣 That is just like the pigs.

今天你不是只能拿那一个 That is not the only one you will get today.

当两个人到法庭时,他们都是输者 When two men go to court, both loose.

远亲不如近邻 A good neighbor may be more important than a distant relative.

打破饭碗 Breaking someone's rice bowl.

敢花钱 Dare to spend money.

你看起来好像娼妓 You look like a prostitute.

我会买便宜一点 I could get it cheaper.

你买了什麼,多少钱? What did you buy? How much was it?

你到那裏? 你做了什麼? Where have you been? What did you do?

你要到那裏去? 你要去做什麼? Where are you going? What do you intend to do?

大生日	Ta sheng jih	Tua sien jit	Big Birthday
歌仔戲	Taiwan Hsi	Goa a hi	Taiwanese Opera
胎神	Tai shen	Tai' sin'	God of the pregnant womb
太陰	Tai yin	Tai yin	Goddess of the moon
道人	Tao jen	To jin	Priests (Men of the Tao)
地支	Ti chih	Te che	Twelve terrestial branches
地理	Ti li	Te li	Variant form of geomancy, activities not related to dead
豆腐	To fu	Tao hu	Bean Curd
再來	Ts'ai lai	Tsai lai	Variety of Rice
村	Ts'un	Chhun	Village
族	Tsu	Tsuo'	Clan or lineage
土地公	T'u ti kung	T'ou te kong	Earth God
土地婆	T'u to Po	T'ou te ma	Wife of Earth God
端午節	Tuan Wu Chieh	Leng chiu tast	Dragon Boat Festival
冬節	Tung chieh	Tang tsat	Winter solstice
五行	Wu hsing	Go chhian	Five primary elements: fire, water, earth, wood, metal
陽	Yang	Yong	Male principle of yin-yang dichotomy
陰	Yin	Yim	Female principle of yin-yang dicotomy

[redacted]

木 定 日	Ta shong jih	Tua sien jih	
教 行 時	Taiwan Hsi	Oca a hi	
開 始	Tai shen	Tai si	
太 陽	Tai yin	Tai yin	
直 入	Tao jen	To jip	
四 象	Ti shih	Te sue	
四 儀	Ti li	Te li	
頭 腦	To lu	Tao lu	
自 然	Te'ai lai	Tsai lai	Variety
針	Te'un	Ohbun	Vitl age
線	Tsu	Tsuo'	Glan or Ziberg
土 地 公	T'u ti kung	T'on te kong	Earth God
土 地 婆	T'u to po	T'on te po	Wife of Earth God
地 本 母	Tuan Wu Ohlah	Lang ohin tsaf	Dragon Boat Festival
冬 節	Tung ohlah	Tang tset	Winter solstice
五 行	Wu hsing	Go ohhian	Five primary elements: fire, water, earth, wood, metal
陽	Yang	Yong	Male principle of yin-yang dionotomy
陰	Yin	Yim	Female principle of yin-yang dionotomy