S.P. DAVIES ★ VOLUME 1 ★ PH

106
014
THS

OLUME 1 ★ PH.D.

106
014
THS

PH.D.

OLUME 1 *

3 1293 00548 7537

2142 7124

THESIS
V.1

LIBRARY
Michigan State
University

This is to certify that the

dissertation entitled

The Evolution of the Textile Subsector
in Egypt:
Development Implications

presented by

Stephen P. Davies

has been accepted towards fulfillment
of the requirements for

Ph.D degree in Agricultural
Economics

James C. Shaffer
Major professor

Date 3/4/88

MSU is an Affirmative Action/Equal Opportunity Institution

O-12771

MSU
LIBRARIES

RETURNING MATERIALS:
Place in book drop to remove this checkout from your record. FINES will be charged if book is returned after the date stamped below.

THE EVOLUTION OF THE TEXTILE SUBSECTOR IN EGYPT: DEVELOPMENT IMPLICATIONS

VOLUME I

By

Stephen P. Davies

A DISSERTATION

Submitted to
Michigan State University
in partial fulfillment of the requirements
for the degree of

DOCTOR OF PHILOSOPHY

Department of Agricultural Economics

1988

This

identifying

operating e

done at Mic

composed of

and other s

clothing pr

The

coordinatio

most import

conclusion

fashioned a

value added

public sect

Seve

enterprises

positively

output and

Furthermore

locations a

constaints

policies an

5364437

ABSTRACT

THE EVOLUTION OF THE TEXTILE SUBSECTOR IN EGYPT:
DEVELOPMENT IMPLICATIONS

By

Stephen P. Davies

This research described the textile subsector of Egypt in 1979 by identifying the participants, their linkages to each other, and their operating environment. The methodology followed other subsector work done at Michigan State University. The subsector was shown to be composed of a modern and a traditional system. Tailors and dressmakers and other small firms were in the traditional system, while ready-made clothing producers and other large firms were in the modern system.

The costs of production in each system and the mechanisms of coordination, including a determination of those firms who control the most important decisions, were also assessed. The most important conclusion was that 34 percent of the cloth used for garments was fashioned at home. Another major conclusion was that most employment and value added was in the tailoring firms, followed by the highly integrated public sector spinning and weaving firms.

Several analyses were also performed. The role of small enterprises in the textile subsector was examined. They contributed positively to the performance of the subsector through their industrial output and their use of labor intensive methods and indigneous resources. Furthermore, they were forces for equity since they operated in rural locations and employed many women. Their internal and external constaints to growth were also examined, including the implications for policies and projects.

A se

which the i

considered.

central dyn

the major p

be incurred

Seve

subsector.

direct the

This would

the labor-u

ways to imp

sector. Th

see their e

A second analysis focused on the evolution of the subsector, in which the influences of regulations and economic variables were considered. The change from a traditional to a modern system was the central dynamic examined; the possibility of a premature transition was the major problem seen. A relative loss of up to one million jobs might be incurred if the transition occurs under certain assumptions.

Several recommendations were made to improve performance in the subsector. It was recommended that public sector wholesalers try to direct the subsidized cloth program through tailors and dressmakers. This would move retailing into low-cost space, promote equity and keep the labor-using tailors in business longer. The second project suggested ways to improve the exports of ready-made clothing from the private sector. The final recommendation was to review several regulations to see their effect on the evolution of the subsector.

To Amalia,

For Whom this work represents a Beginning

Thi

which ther

Shaffer, t

form. I h

pages avai

subsector

for intell

the Rural

In

and Collee

close fri

many poli

responden

pursuit o

used in t

Ropes, Pa

and sympa

project a

and data

should b

I

Yet the

ACKNOWLEDGMENTS

This research was assisted by many people at different stages, of which there were many. My committee was helpful and understanding. Jim Shaffer, the chairman, and Don Mead tolerated many early drafts in raw form. I hardly managed to slip anything by them, even with the many pages available for hiding loose thinking. Mike Weber's enthusiasm for subsector work was good support as well. Carl Liedholm must be thanked for intellectual and financial support for many years as the director of the Rural Non-Farm Employment Project and its successors.

In Egypt there were many people to thank for support as well. Jim and Colleen Seale weathered the storms from start to finish and became close friends in the process. Mahmoud Badr and Nadia el Sheik fended off many political difficulties and patiently translated enumerators' and respondents' complaints. Rebab El Abd walked many side streets in pursuit of garment firms and introduced me to some of the key informants used in the research. At Catholic Relief Service, Andy Koval, George Ropes, Paul Cunningham, and especially Tom Tauras provided a safe haven and sympathetic ears for our project problems. Harold Lubell kept the project alive at USAID in Cairo with unflagging support. The enumerators and data processors on the project performed essential services that should be acknowledged as well.

In Michigan and in Colorado there have been many who have helped get the project finished. A special acknowledgment goes to Steve

Franzel, St

Cleo Covena

dissertatic

acknowledgm

want to bei

provided bo

last two ye

Franzel, Steve Haggblade, and John Halloran, the other members of the Cleo Covenant, with a note that the only thing as hard as finishing a dissertation is selling a house in northwest Lansing. A similar acknowledgment goes to Garret Peaslee, who came as close as anyone would want to being a member of the Covenant. Finally, my wife, Amalia, provided both positive and negative reinforcements (as needed) during the last two years in Colorado.

CHAPTE

CHAPTE

TABLE OF CONTENTS

Page

LIST OF TABLES..... xv
LIST OF FIGURES.....xix
LIST OF ABBREVIATIONS AND CONVERSIONS..... xx

CHAPTER 1: INTRODUCTION, PROBLEM STATEMENT, AND OBJECTIVES OF THE RESEARCH

1.1 Introduction.....1

1.2 Problem Statement.....2

1.3 Goals and Objectives of the Research.....2

1.4 Major Issues.....4
1.4.1 A Comparative Statics Analysis of the Subsector.....4
1.4.2 The Evolution of the Subsector.....5
1.4.3 Small Scale Industry Revisited.....6
1.4.4 Development Implications.....7

1.5 A Preview of the Research.....7

CHAPTER 2: RESEARCH METHODOLOGY AND DISCUSSION OF MAJOR ISSUES

2.1 Introduction.....9

2.2 The Subsector Approach.....9
2.2.1 Key Subsector Concepts.....10
2.2.1.1 Functions.....11
2.2.1.2 Coordinating Mechanisms Between Functions.....11
2.2.1.3 Participants.....13
2.2.1.4 The Subsector Grid and the Creation of Channels.....13
2.2.1.5 The Subsector as a Collection of Channels.....14
2.2.2 The Environment.....14
2.2.2.1 The Image of a Dynamic Environment.....15

2.3 A Comparative Analysis of Channels in the Subsector....16
2.3.1 Using Microeconomics to Evaluate Costs and Profits in the Subsector.....16
2.3.1.1 Analyzing Total Versus Marginal Profits.....18
2.3.1.2 Analyzing Costs Through a Channel.....19
2.3.2 Markets, Vertical Integration, and Other Coordination Mechanisms.....20
2.3.2.1 Technological and Scale Factors Affecting Coordination.....22

CHAPT

2.3.2.2 Overcoming Limitations in Business Capabilities.....22
2.3.2.3 Issues Related to Markets and Contracts.....23
2.3.2.4 Standard Operating Procedures.....25

2.4 Sources of Data Used in the Research.....27
2.4.1 The MSU Rural Non-Farm Employment Project - Egypt Phase I and Phase II Surveys.....29
2.4.2 The MSU Entrepreneurship Questionnaire.....31
2.4.3 The Special Tailoring Questionnaire.....32
2.4.4 The Subsector Interviews.....32
2.4.5 Secondary Sources: Government Data and Consultant's Reports.....32
2.4.6 The Philosophy of Data Use.....33

2.5 The Evolution of the Subsector.....34
2.5.1 Types of Dynamic Analyses.....34
2.5.2 Evolutionary Models in Economics.....35
2.5.3 The Subsector Approach as an Evolutionary Model.....39

2.6 Small Scale Enterprises (SSE) Revisited.....41
2.6.1 The First Visitation: Important Contributions of SSE to the Development Process.....42
2.6.2 SSE Revisited: Growth Constraints, Evolution, and Production-Distribution Systems.....43
2.6.3 The Advantages of the Subsector Approach in Small Enterprise Research.....45

2.7 The Performance Criteria and Development Implications...47

2.8 Summary.....49

CHAPTER 3: A PICTURE OF THE TEXTILE SUBSECTOR

3.1 Introduction.....50

3.2 The Importance of Cotton and Textiles in the Egyptian Economy.....50

3.3 Participants and Functions in the Subsector.....52
3.3.1 Participants in the Subsector.....54
3.3.2 Sequences of Functions in the Subsector.....55
3.3.3 An Overview of the Functions and Participants in the Textile Subsector.....57
3.3.3.1 The Spinning Industry.....57
3.3.3.2 The Weaving Industry.....58
3.3.3.3 The Wholesaling Industry.....59
3.3.3.4 The Ready-Made Clothing (RMC) Industry.....60
3.3.3.5 The Retailing Industry.....60
3.3.3.6 Tailoring and Dressmaking.....61

3.4 Linkages in the Subsector.....62
3.4.1 Markets in the Subsector.....63
3.4.2 Vertical Integration and Administrative Coordination in the Subsector.....64

CHAPT

3.5 Further Perspectives on the Subsector.....66
3.5.1 Employment in the Subsector.....66
3.5.2 Estimated Volume Handled in the Subsector.....68
3.5.3 Estimated Value Added in the Subsector.....70

3.6 The Systems in the Subsector.....72
3.6.1 The Traditional and Modern Systems.....73
3.6.2 Providing Variety and Minimum Cost Production in the Traditional and Modern Systems.....74

3.7 Summary.....76

CHAPTER 4: THE ECONOMICS OF THE TEXTILE SUBSECTOR IN EGYPT

4.1 Introduction.....78

4.2 The Products and Demand in the Textile Subsector.....78
4.2.1 An Overview of the Output of the Subsector.....78
4.2.2 The Products of Tailoring Industry.....81
4.2.2.1 The Traditional Tailoring Products.....81
4.2.2.2 The Modern Tailoring Products.....86
4.2.3 The Products of the Dressmaking Industry.....88
4.2.3.1 The Traditional Dressmaker's Products.....88
4.2.3.2 The Modern Dressmaking Products.....90
4.2.4 Trends in Consumption of Textile Products.....92
4.2.4.1 Domestic Consumption Levels and Trends.....93
4.2.4.2 A Preferred Demand Analysis and Its Uses.....97
4.2.4.3 World Production, Consumption and Trade in Textile and Clothing Products.....99

4.3 The Economics of Supply in the Textile Subsector.....104
4.3.1 The Production of Cloth and Garments.....106
4.3.1.1 Raw Material Sources for Cloth Production.....106
4.3.1.2 Spinning Yarn.....108
4.3.1.3 Weaving Cloth.....109
4.3.1.4 Making Garments.....113
4.3.2 The Financial Budgets for Firm-groups in the Subsector.....116
4.3.2.1 The Financial Budgets for the Private Weavers.....118
4.3.2.2 The Financial Budgets for the Private Wholesalers.....121
4.3.2.3 The Financial Budgets for the Private Ready-made Garments Firms.....123
4.3.2.4 The Financial Budgets for the Private Retailing Firms.....125
4.3.2.5 The Financial Budget for the Tailoring and Dressmaking Firms.....129

4.4 Special Considerations.....132
4.4.1 Incentives for Vertical Integration in the Subsector.....132

CHAPT

4.4.2 The Potential for Expansion by the Firm-groups in the Subsector....136
4.4.3 The Impacts of Different Prices and Productivity Changes on Profits....139
4.4.4 The Total Delivered Cost of Garments in the Channels of the Subsector....143

4.5 Summary....144

CHAPTER 5: COORDINATION ISSUES IN THE EGYPTIAN TEXTILE SUBSECTOR

5.1 Introduction....145
5.1.1 The Subsector Interviews Outside the Phase II Survey....145

5.2 Coordination Issues: A Restatement....148

5.3 Coordination in the Traditional System....149
5.3.1 Influencing Demand in the Traditional System....150
5.3.1.1 The Consumer's Preferences....150
5.3.1.2 Advertising and Coordinating Demand....152
5.3.2 Coordinating Supply in the Traditional System....154
5.3.2.1 The Wholesaler's Role in Coordination....154
5.3.2.2 The Transaction between the Tailor and the Final Consumer....156
5.3.2.2.1 The Features of the Tailor-Consumer Transaction....156
5.3.2.2.2 Coordination Aspects of the Tailor-Consumer Transaction....162
5.3.3 Other Observations on Coordinating Supply in the Traditional System....163
5.3.4 Some Dynamic Issues of Coordination in the Traditional System....165
5.3.4.1 Coordinating Growth and Change in Wholesaling..165
5.3.4.2 Coordinating Growth and Change in Tailoring....166

5.4 Coordination in the Modern System....168
5.4.1 Influencing Demand in the Modern System....168
5.4.1.1 The Role of the Retailer....168
5.4.1.1.1 The Retailer's Choice: Cloth Versus Clothing....169
5.4.1.1.2 Pricing Practices in the Retailing Industry....170
5.4.1.1.3 Advertising and Merchandising in the Retailing Industry....171
5.4.1.1.4 Current Practices in the Retailing Industry and their Impacts on Coordination....173
5.4.1.2 Demand Influences from Other Firm-Groups in the Subsector....173
5.4.2 Coordinating Supply in the Modern System....174
5.4.2.1 The Reduced Role of the Wholesaler....174
5.4.2.2 The Current Situation....176

CHAP

5.4.2.3 The Changing Role of the Weaver and RMC Producer....177
5.4.2.4 The Points of Control in the Modern System....180
5.4.2.5 Other Observations on Coordinating Supply in the Modern System....181
5.4.2.5.1 The Role of Credit in Coordinating the Subsector....181
5.4.2.5.2 The Role of Research and Development in Coordinating the Subsector....183
5.4.2.5.3 Dynamic Coordination Issues in the Modern System....185

5.5 Summary....187

CHAPTER 6: THE ENVIRONMENT IN THE SUBSECTOR

6.1 Introduction....189

6.2 Characteristics of the Environment and Major Issues Affecting the Subsector....189
6.2.1 Major Development Issues in the Environment of the Subsector....190
6.2.2 The Natural and Human Resources in Egypt....192
6.2.2.1 The Land and Natural Resources....192
6.2.2.2 Human Resources in Egypt....195
6.2.3 Historical Impacts on the Textile Subsector....198
6.2.4 The Macroeconomic Environment of the Subsector....202
6.2.4.1 The Structure and Growth of Gross Domestic Product (GDP)....202
6.2.4.2 The Labor Force....206
6.2.4.3 Foreign Trade and the Balance of Payments....209
6.2.4.4 Governmental Fiscal Operations....212

6.3 The Regulatory and Policy Environment of the Subsector....215
6.3.1 Introduction....215
6.3.2 The Regulation of the Public Sector....215
6.3.3 The Regulation of the Private Sector....218
6.3.3.1 Public Control over the Private Sector....219
6.3.3.2 The Regulations of Margins in Private Sector Distribution....220
6.3.3.3 Labor Regulations....220
6.3.3.4 Taxation Regulations....222
6.3.3.5 The Regulation of Foreign Trade....222

6.4 Support Organizations....224
6.4.1 A Review of Organizations that Support the Subsector....224
6.4.2 Promoting Demand in the Textile Subsector: The Popular Supply Program and the Workers' Project....229
6.4.2.1 The Popular Supply Program....229
6.4.2.2 The Workers' Project....231

6.5 Summary....232

CHAPTE
7
7
7
CHAPT

CHAPTER 7: THE EVOLUTION OF THE SUBSECTOR

7.1 Introduction.....233

7.2 Evolutionary Aspects of Consumer Behavior.....233
7.2.1 Projected Demand for Clothing.....236
7.2.1.1 The Implications of Using Volume Statistics to Predict Demand and Supply Responses.....239

7.3 The Evolution of the Industries in the Subsector.....241
7.3.1 The Evolution of the Retailing Industry.....242
7.3.1.1 Historical Forces Affecting the Retailing Industry.....242
7.3.1.2 Projections of the Number of Firms, Employment, and Capital Requirements in the Retailing Industry.....243
7.3.1.3 The Future Evolution of the Retailing Industry.....251
7.3.1.3.1 Incentives for Retailing Ready-made Clothing.....253
7.3.2 Evolution in the Wholesaling Industry.....255
7.3.3 The Evolution of the Garment Making Industries - Tailors, Dressmakers, and Ready-made Clothing Producers.....257
7.3.3.1 The Past Growth of the RMC Firms.....257
7.3.3.2 Forces Affecting the Tailoring Industry.....258
7.3.3.3 Projections of Firm Growth and Employment in the Garment Making Industries.....261
7.3.3.4 Alternative Projections of Employment in the Garment Making Industry.....263
7.3.3.5 The Future Evolution of the Garment Making Industries.....268
7.3.4 The Evolution of the Weaving Industry.....271
7.3.4.1 Projections of Firm Growth and Employment in the Weaving Industry.....273
7.3.4.2 The Future Evolution of the Weaving Industry...274

7.4 Summary.....275

CHAPTER 8: PROBLEMS AND POTENTIAL IN THE TEXTILE SUBSECTOR IN EGYPT

8.1 Introduction.....277

8.2 The Characteristics of the Traditional and Modern Systems.....277

8.3 Strengths and Weaknesses of the Traditional and Modern Systems.....289

8.4 Evaluating the Current and Future Performance of the Subsector.....290
8.4.1 Assessing Current Performance of the Subsector.....291
8.4.2 The Possible Introduction of the Modern System Before its Time.....293
8.4.3 The Objectives of the Public Sector.....296

CHAPT

APPEN

A1.1

A1.2

A1.3

A1.4

A

A

8.5 Suggested Policy and Project Activities to Improve Performance in the Subsector.....299
8.5.1 Suggested Policy Actions.....299
8.5.2 Creating the Semi-Traditional System.....301
8.5.2.1 Sources of Improved Performance in the Semi-Traditional Channel.....303
8.5.3 Export Promotion Programs.....305

8.6 Summary.....306

CHAPTER 9: RECOMMENDATIONS AND CONCLUSIONS

9.1 Introduction.....308

9.2 Conclusions.....308
9.2.1 A Comparative Statics Analysis of Channels in the Subsector.....308
9.2.1.1 The Demand for Products of the Subsector.....309
9.2.1.2 The Picture of the Subsector.....310
9.2.1.2.1 The Value Added in the Channels and Stages of the Subsector.....313
9.2.1.2.2 Factors Affecting Total Delivered Cost in the Channels of the Subsector.....315
9.2.1.3 Coordination in the Subsector.....316
9.2.1.3.1 The Location of Control in the Subsector...318
9.2.2 Small Scale Enterprises Revisited.....319
9.2.2.1 The Static Benefits of Production in Small Firms in the Textile Subsector in Egypt.....319
9.2.2.2 The Dynamics of Small Firms in the Textile Subsector.....320
9.2.3 The Evolution of the Subsector.....322
9.2.4 The Adequacy of the Subsector Methodology.....325

9.3 Recommendations.....326
9.3.1 Recommendations for Policies and Projects.....327
9.3.2 Recommendations for Further Research.....328

APPENDIX 1: ESTIMATION OF THE NUMBER OF FIRMS AND EMPLOYMENT IN THE TEXTILE SUBSECTOR IN EGYPT, 1979.....330

A1.1 The Number of Firms and Employment in the Spinning Industry.....330
A1.2 The Number of Firms and Employment in the Weaving and Knitting Industry.....337
A1.3 The Number of Firms and Employment in the Wholesaling Industry.....340
A1.4 The Number of Firms and Employment in the Garment Making Industry.....341
A1.4.1 The Number of Firms and Employment in the Ready-made Garment Firms.....341
A1.4.2 The Number of Firms and Employment in the Tailoring and Dressmaking Firms.....343

A1.5
A1.6
APPEN
A2.1
A2.2
A
A
A2.3
A2.4
A2.5
APPEN
A3.1
A3.2
A3.3
A3.4
A3.5
APPE
A4.1
A4.2
A4.3
A4.4
A4.5
A4.6
A4.7
BIBL

A1.5 The Number of Firms and Employment in the Retailing Industry.....347
A1.6 Estimates of Vertical Integration in the Subsector.....349

APPENDIX 2: PRODUCT FLOWS, SALES VALUES, AND VALUE ADDED IN THE EGYPTIAN TEXTILE SUBSECTOR 351

A2.1 The Production, Exports, and Imports of Cotton, Wool and Artificial Fibers.....352
A2.2 The Public Sector Spinning, Weaving, and Ready-made Clothing Production, Sales, and Value Added.....354
A2.2.1 Public Sector Spinning Sales and Value Added.....354
A2.2.2 Public Sector Weaving and RMC Statistics.....357
A2.3 Inputs and Outputs of the Weaving Function.....357
A2.4 Constructing Subsector Flows for Weaving, Wholesaling, RMC Production, and Retailing Functions.....360
A2.5 Output, Sales, and Value Added in the Tailoring and Dressmaking Industries.....367

APPENDIX 3: ESTIMATION OF THE FINANCIAL BUDGETS FOR PRIVATE SECTOR FIRMS IN THE SUBSECTOR.....374

A3.1 Financial Budgets for the Weaving Industry.....375
A3.2 Financial Budgets for the Private Ready-made Clothing Industry.....390
A3.3 Financial Budgets for the Private Sector Wholesaling Industry.....401
A3.4 Financial Budgets for the Private Sector Retailing Industry.....404
A3.5 Financial Budgets for Tailors and Dressmakers.....408

APPENDIX 4: THE CALCULATION OF ECONOMIC BUDGETS FOR FIRMS IN THE TEXTILE SUBSECTOR IN EGYPT.....410

A4.1 Converting Financial Values to Economic Values.....410
A4.2 The Economic Budgets for the Private Weaving Firms.....414
A4.3 The Economic Budgets for the Private Wholesaling Firms.....416
A4.4 The Economic Budgets for the Private RMC Firms.....418
A4.5 The Economic Budgets for Private Retailing Firms.....418
A4.6 The Economic Budgets for Tailors and Dressmakers.....421
A4.7 Conclusions.....421

BIBLIOGRAPHY.....424

2.1

3.1

3.2

3.3

3.4

3.5

4.1

4.2

4.3

4.4

4.5

4.6

4.7
4.8

4.9
4.10
4.11

4.12

4.13

4.14

4.15

4.16

LIST OF TABLES

Page

2.1 Estimated Total Employment in Fayoum and Kalyubiya, By Sex and Employment Category, 1981.....30

3.1 Gross Value Added in Manufacturing, By Activity, 1969-70 to 1978.....51
3.2 Alternative Sequences of Production and Distribution in the Textile Subsector.....56
3.3 Total Employment and Number of Firms in the Textile Subsector, By Channel and Firm-group, Egypt, 1979.....67
3.4 Total Volume in the Textile Subsector, By Channel and Firm-group, Egypt, 1979.....69
3.5 Total Value Added in the Textile Subsector, By Channel and Firm-group, Egypt, 1979.....71

4.1 Products of the Egyptian Textile Subsector, By Type of Product, Egypt, 1976.....80
4.2 Products of the Sampled Tailors, By Location of Producers, Number of Pieces and Value, Egypt, 1982.....83
4.3 Products of the Sampled Dressmakers, By Number of Pieces and Value, Egypt, 1982.....90
4.4 Total and Clothing Expenditures of Urban Households, By Expenditure Class, Egypt, 1975.....95
4.5 Total and Clothing Expenditures of Rural Households, By Expenditure Class, Egypt, 1975.....96
4.6 Estimated Expenditure Elasticities for Per Capita Consumption of Textiles and Footwear, By Rural and Urban Locations, Egypt, 1975.....98
4.7 World Fiber Production, 1900 - 1980.....100
4.8 Employment in Textiles, Clothing and Manufactures, 1953-1980.....102
4.9 Textile Exports By Main Areas, 1980.....105
4.10 Clothing Exports By Main Areas, 1980.....105
4.11 Financial Budgets for Private Weaving Firms, By Size of Firm, Egypt, 1979.....119
4.12 Budget Analysis for Public and Private Sector Weavers, By Size of Firm, Egypt, 1979.....120
4.13 Financial Budgets for Wholesaling Firms, By Size of Firm, Egypt, 1979.....122
4.14 Budget Analysis for Private and Public Sector Wholesalers, By Size of Firm, Egypt, 1979.....123
4.15 Financial Budgets for Ready-made Clothing Firms, Egypt, 1979.....124
4.16 Budget Analysis for the Private and Public Ready-made Garment Firms, By Size of Firm, Egypt, 1979.....126

4.17
4.18
4.19
4.20
4.21
4.22
4.23
5.1
5.2
5.3
5.4
5.5
5.6
6.1
6.2
6.3
6.4
6.5
6.6
6.7
7.1
7.2
7.3
7.4
7.5
7.6
7.7

4.17 Financial Budgets for Retailing Firms, By Size of Firm, Egypt, 1979.....127
4.18 Budget Analysis for Public and Private Sector Retailers, By Size of Firm, Egypt, 1979.....128
4.19 Estimated Financial Budgets for Tailors and Dressmakers By Rural and Urban Producers, Egypt, 1979.....130
4.20 Budget Analysis for Tailoring and Dressmaking Firms, By Rural and Urban Producers, Egypt, 1979.....131
4.21 Estimated Volume Per Firm, By Size of Firm, Egypt, 1979....133
4.22 Total Investment and Available Resources Per Firm, By Function, Egypt, 1979.....134
4.23 Value Added in the Channels of the Subsector.....142

5.1 Number of Subsector Interviews, By Function and Size of Firm, Egypt, 1982.....147
5.2 The Vertical Integration of Firms in the Subsector Interviews By Functions Integrated and Size of Firm, Egypt, 1982.....148
5.3 How Customers Heard About the Sampled Tailors and Dressmakers, By Rural and Urban Producers, Egypt, 1982.....153
5.4 Extent of Bargaining By Tailors and Dressmakers, By Rural and Urban Producers, Egypt, 1982.....158
5.5 Pricing of Finishing Pieces By Tailors and Dressmakers, By Rural and Urban Producers, Egypt, 1982.....159
5.6 Reasons Different Prices are Charged By Tailors and Dressmakers, By Rural and Urban Producers, Egypt, 1982.....161

6.1 Growth of Population and of Cultivated and Cropped Areas, 1897 - 1975.....196
6.2 Demographic Projections, Medium Variant.....197
6.3 The Sectoral Structure of Gross domestic Product, Egypt, Various Years.....203
6.4 Sectoral Growth Rates in Egypt, Various Years.....205
6.5 Balance of Payments Components.....211
6.6 Government of Egypt Fiscal Operations.....214
6.7 Support Organizations for the Textile Subsector in Egypt.....225/226

7.1 Two Scenarios for Projected Retail Consumption of Textile Products in Egypt.....238
7.2 Retail Consumption of Fabric and Clothing, Projected to 1990 and 2000.....245
7.3 Numbers of Textile Retailing Firms and Employment, Projected to 1990 and 2000, By Size of Firm.....247
7.4 Two Scenarios for Land and Building Requirements in the Retailing Industry in 1990 and 2000, By Firm Group..249
7.5 Projected Numbers of Firms and Employment in the Ready-made Clothing Industry in 1990 and 2000, By Size of Firm.....260
7.6 Projected Numbers of Tailors and Dressmakers and Home-fashioned Fabric Used in 1990 and 2000, By Rural and Urban Location.....262
7.7 Projected Maximum Possible Expansion in the Ready-made Clothing Firms in 1990 and 2000, By Firm Size, Egypt, 1979.....264

7.8

7.9

8.1

8.2

9.1

A1.1

A1.2
A1.3
A1.4

A1.5

A1.6

A1.7

A2.1

A2.

A2.

A2.

A2.

A2.

A2

A2

A2

A

A

7.8 Total Employment and Output for Ready-made Clothing and Tailoring Firms under Alternative Scenarios in 1990 and 2000, By Type of Firm.....266
7.9 Projected Numbers of Weaving Firms and Employment in 1990 and 2000, By Firm Size and Type.....272

8.1 Characteristics of the Traditional and Modern Textile Systems.....278
8.2 Capital-Labor, Output-Labor, and Output-Capital Ratios for Selected Firm-Groups in the Textile Subsector, Egypt, 1979.....281

9.1 Value Added in the Channels of the Subsector.....314

A1.1 Public Sector Textile Employment, By Company and Function, Egypt, 1974.....331
A1.2 Public Sector Spinning and Weaving Equipment, 1975.....334
A1.3 Profit Analysis By Product Groups, 1974.....335
A1.4 Estimated Weaving, Spinning, and Other Employment in the Public Sector Textile Companies, Egypt, 1974.....336
A1.5 Estimated Employment in the Private Sector Weaving Stage By Firm Size, Egypt, 1974.....339
A1.6 Estimated Tailoring and Dressmaking Firms and Employment in Kalyubiya Governorate, 1982.....345
A1.7 Estimated Number of Tailoring and Dressmaking Firms and their Employment, By Rural and Urban Producers, Egypt, 1979.....346

A2.1 Value Added As a Proportion of Sales in the Public Sector By Function, Egypt, 1979.....355
A2.2 Estimates of Value Added and Sales in the Public Sector Spinning Firms, Egypt, 1979.....356
A2.3 Input and Output Quantities from the Public and Private Sector Weaving Firms, By Product Type, Egypt, 1979.....359
A2.4 Sources of Inputs and Destination of Outputs in the Public and Private Weaving Firms, Egypt, 1979.....362
A2.5 Sources of Inputs and Destination of Outputs in the Public and Private Wholesaling Firms, Egypt, 1979.....363
A2.6 Sources of Inputs and Destination of Outputs in the Public and Private Garment Firms, Egypt, 1979.....365
A2.7 Sources of Inputs and Destination of Outputs in the Public and Private Retailing Firms, Egypt, 1979.....366
A2.8 Total Tailoring and Dressmaking Firms and Meters of Cloth Used, By Rural and Urban Locations, Egypt, 1982.....369
A2.9 Estimated Sales and Value Added for the Tailoring and Dressmaking Industries, By Rural and Urban Locations, Egypt, 1982.....370
A2.10 Meters of Cloth Used By Sampled Tailors, Average and High Estimates, By Product Type, Rural and Urban Locations, Egypt, 1982.....371
A2.11 Meters of Cloth Used By Sampled Dressmakers, Average and High Estimates, By Product Type, Rural and Urban Locations, Egypt, 1982.....372

A3.1

A3.2
A3.3
A3.4
A3.5

A3.6

A3.7

A3.8

A3.9

A3.1

A3.1

A3.1

A3.1

A3.1

A3.1

A3.1

A3.1

A3.1

A3.1

A3.1

A4.

A4.

A4.

A4.

A4.

A4.

A4.

A3.1 Output of a Mechanical Loom with Varying Speeds, Weft Yarns, and Hours Worked Per Year....377
A3.2 Financial Budgets for Small Weaving Firms, Egypt, 1979....379
A3.3 Financial Budgets for Medium Weaving Firms, Egypt, 1979...380
A3.4 Financial Budgets for Large Weaving Firms, Egypt, 1979....383
A3.5 Machinery and Space Requirements for Private Weaving Firms, Egypt, 1979....386
A3.6 Fixed Assets, Working Capital Values and Flow Costs for Private Weaving Firms, Egypt, 1979....388
A3.7 Summary Values for Private Weaving Firms, By Size of Firm , Egypt, 1979....389
A3.8 Financial Budgets for Small Ready-made Garment Firms, Egypt, 1979....392
A3.9 Financial Budgets for Medium-Small Ready-made Garment Firms, Egypt, 1979....393
A3.10 Financial Budgets for Medium Ready-made Garment Firms, Egypt, 1979....394
A3.11 Financial Budgets for Large Ready-made Garment Firms, Egypt, 1979....397
A3.12 Land, Building, and Machinery Requirements for Private Garment Making Firms, Egypt, 1979....398
A3.13 Summary Values for Private Garment Making Firms, By Size of Firm, Egypt, 1979....399
A3.14 Financial Budgets for Small Wholesaling Firms, Egypt, 1979....402
A3.15 Financial Budgets for Large Wholesaling Firms, Egypt, 1979....403
A3.16 Financial Budgets for Small Retailing Firms, Egypt, 1979....406
A3.17 Financial Budgets for Medium Retailing Firms, Egypt, 1979....407
A3.18 Summary Values for Private Retailing Firms, By Size of Firm, Egypt, 1979....409
A3.19 Financial Budgets for Tailors and Dressmakers, By Rural and Urban Producers, Egypt, 1979....410

A4.1 Calculation of Accounting Ratios for Textile Products for Use in Economic Budgets....412
A4.2 Other Accounting Ratios Used in the Calculation of Economic Budgets....413
A4.3 Economic Budgets for Private Weaving Firms, By Size of Firm, Egypt, 1979....415
A4.4 Economic Budgets for Wholesaling Firms, By Size of Firm, Egypt, 1979....417
A4.5 Economic Budgets for Ready Made Clothing Firms, By Size of Firm, Egypt, 1979....419
A4.6 Economic Budgets for Retailing Firms, By Size of Firm, Egypt, 1979....420
A4.7 Economic Budgets for Tailors and Dressmakers, By Rural and Urban Producers, Egypt, 1979....422

2.1

3.1

4.1
4.2
4.3
4.4
4.5
4.6
4.6a

6.1
6.2

9.1

LIST OF FIGURES

		Page
2.1	The Basic Subsector Map	12
3.1	The Textile Subsector in Egypt, 1979	53
4.1	Traditional Tailoring Products: Gelebeas	85
4.2	Traditional Tailoring Products: Complementary Goods	85
4.3	Modern Tailoring Products	87
4.4	Traditional Dressmaking Products: Gelebeas and Dresses	89
4.5	Modern Dressmaking Products	91
4.6	Simple Frame Loom	111
4.6a	Loom Elements at Time of Weft Insertion	111
6.1	The Map of Egypt	194
6.2	The Intersection of Submarkets in the Egyptian Labour Market	206
9.1	The Textile Subsector in Egypt, 1979	311

Abbr

Cont

LIST OF ABBREVIATIONS AND CONVERSIONS

Abbreviations Used:

SSE = Small Scale Enterprise

RMC = Ready-made Clothing

MT = Metric Ton

LE = Egyptian Pound (Currency)

Conversions Used:

1 Egyptian pound = 1.43 U.S. Dollars (Official Rate, 1982)

1 Egyptian Pound = .84 U.S. Dollars (Approx. Market Rate, 1982)

1 Acre = .963 Feddan

INTRO

Th
urban soc
presence
transitio
employmen
is a need
economy's

Wh
distinqu
of the pe
labor ma
decline
and a sl
a long h
more rec
unique i
total la
same lan
desert m
without

CHAPTER 1

INTRODUCTION, PROBLEM STATEMENT, AND OBJECTIVES OF THE RESEARCH

1.1 Introduction

The Egyptian society is in a major transition from a rural to urban society and from an agarian to an industrialized economy, in the presence of a rapidly rising population on a limited land base. The transition brings with it the need to expand domestic production and employment and provide for continued income growth. Additionally there is a need to absorb or slow migration to urban areas and distribute the economy's output in an equitable manner.

While this transition is not unique, there are circumstances that distinquish Egypt from other countries in the developing world. The rise of the petroleum economy improved foreign exchange and created tight labor markets as workers emigrated to the Gulf states. The more recent decline in the oil market has caused a large decrease in foreign exchange and a slowing of emigration. Also, attempts to industrialize Egypt have a long history and the strategies, including socialist approaches and more recent market approaches, have left imprints on the economy. Also unique in Egypt is the nature of the limitations on the land. While the total land available is large, only 4 percent is arable, and it is the same land upon which most of the growing population is located. The desert may offer attractive living space for a rising population, but not without expensive infrastructural development and major changes in the

organizati

Thi

groups may

There is a

that bad

promotion

must be c

assist th

Th

largest e

such, imp

transitio

subsector

employmen

influence

dimension

developme

special

Th

Egypt in

sequence

the subs

organization of the production and consumption patterns in the economy.

This transition is neither assured nor likely to be smooth. Many groups may fail to participate, adding to political and social tensions. There is a great possibility, given the uncertainty of the transition, that bad investments and costly mistakes will be made. Thus, the promotion of policies, projects, or groups that can ease the transition must be considered. The textile subsector is one industry that can assist the transition, and it is the focus of this research.

1.2 Problem Statement

The textile subsector in Egypt is the largest employer and second largest exporter and source of value added in the industrial sector. As such, improved policies related to this subsector might aid the transition. An important potential contributor within the textile subsector is the small tailor and dressmaker, who account for much of the employment and value added. Their role and future prospects will influence how the subsector performs in employment, equity and efficiency dimensions. Thus, the central problem of the research is to assess the development implications of the evolution of the textile subsector, with special reference to the contribution of the small tailor and dressmaker.

1.3 Goals and Objectives of the Research

The goal of this research is to describe the textile subsector in Egypt in order to diagnose its problems, and attempt to prescribe what sequence of policies and programs, if any, can be implemented to improve the subsector's performance. To achieve this goal, the following

specific o

subse
and r
of gr
subse
proce
the e

the d
perfo
progr

polic
influ
crite

syste
basic
speci
over

The

developing

identify a

industry

terms of

dimensions

add insigh

of keepin

to be spe

construct

specific objectives are pursued:

(1) To describe the structure and conduct of the textile subsector in Egypt with respect to its current economic performance and role in the Egyptian economy; its past evolution and the history of growth and accumulation by different participants in the subsector; and the important regulatory, standard operating procedures (SOPs), and transactions characteristics that influence the evolution of the subsector.

(2) To diagnose the problems and their severity by comparing the description from Objective 1 using an expanded version of the performance criteria of the efficiency, employment, equity, and progressiveness dimensions usually considered by economists.

(3) To prescribe recommendations that include improved policies, institutions, and standard operating procedures to influence the performance of the subsector so that it approaches the criteria established.

(4) To develop a conceptual framework that is capable of systematically assessing the variables that will be analyzed -- basic economic variables, SOPs, transactions requirements, and special environmental variables -- and assessing their performance over time.

These are admittedly broad objectives, but are directed at developing a description of the subsector in order to set the stage to identify and diagnose its problems. The shortcomings and prospects of an industry (the current and potential performance) can only be evaluated in terms of a set of performance criteria; hence referring to those dimensions is important. Finally, the "widening" of the inquiry should add insights from the additional variables, but it introduces the problem of keeping the research manageable; thus, the conceptual framework needs to be specific enough to provide a map through these shoals, and its construction is an important objective.

Som

it is perh

arguments

guide to t

section wi

each chapt

The

several su

supportin

implicati

subsector

implicati

be approa

Th

data is

channels

as any s

cotton,

the main

microeco

used and

C

the rela

1.4 Major Issues

Some common themes and arguments run through these objectives, so it is perhaps useful to picture the research in terms of the major arguments and their subcomponents. This section presents a reader's guide to the major arguments made in this dissertation. The following section will give the more usual approach by describing the contents of each chapter.

The research will address three major isssues, each of which has several sub-components. Furthermore, these issues are hopefully mutually supporting and create a consistent argument regarding the development implications for Egypt of the past and future evolution of its textile subsector. All of these issues are discussed in the context of their implications for the development of Egypt, and the image of how that will be approached is also discussed below.

1.4.1 A Comparative Statics Analysis of the Subsector

The first argument, and the one to which much of the empirical data is addressed, is a comparative statics analysis of the different channels in the textile subsector. A channel in the subsector is defined as any sequence of firms that transform the raw product, generally cotton, into a final good, generally a garment. The research will assess the main channels from a number of different perspectives, including microeconomic analysis and an assessment of the coordination mechanisms used and their impact on performance.

One main objective of analyzing these variables will be to show the relative costs of the different channels, which includes all the

costs of p
hands of t
extent of
markets, a
number of
the cost a
of raw mat
factors th

Th
of the su
is to be
the subse
models in
of firms
instituti
view of t

Th
models in
with a mo
influenci
balances
particip
Many of t
the spir
analysis.

costs of producing and delivering a product from raw materials into the hands of the final consumer. It is influenced by the size of firm, the extent of vertical integration, the performance of the product and factor markets, and its regulatory and human environment. Furthermore, the number of different steps that channels use to make the transformation, the cost and risk of holding inventories in different ways, and the use of raw materials in different channels will be examined because they are factors that determine the total costs of a particular channel.

1.4.2 The Evolution of the Subsector

The second major argument concerns the past and future evolution of the subsector. One of the major tasks will be to assess how evolution is to be perceived, and it will be argued that the methodology used here, the subsector approach, has many affinities with other evolutionary models in economics. The effects of uncertainty and a limited capacity of firms for making quick changes -- resulting from economic, institutional and behavioral realities -- means that the evolutionary view of the subsector should yield considerable insight.

The important affinities of this research with the evolutionary models include the absence of optimizing concerns, which are replaced with a more satisficing view of change; the assumption of an active and influencing environment; the concern with systemwide interactions and balances among different participants; and the specification of the participants in the subsector using more dimensions than is usually done. Many of these approaches could be used with more standard analyses, but the spirit in which they are pursued here leans towards an evolutionary analysis.

The

First, som

the effect

unique and

certain ti

should be

some idea

The

factors a

the nature

different

arrangeme

alternati

are ineff

Th

industry,

developme

weaknesse

institut

valid. T

and its u

arguments

are expan

ability t

anticipat

There are two important subsidiary components of this discussion. First, some evidence will be presented throughout the research to show the effect on the evolution of the system of the enduring nature of unique and irreversible decisions made by important decisionmakers at certain times. The primary implication will be that the policymakers should be aware of when their actions have these kinds of effects, and some idea of their consequences under alternative scenarios.

The second underlying theme will be an examination of the main factors affecting growth and change. They include several subcomponents: the nature of capital accumulation; the expansion and contraction of different kinds of firms and how that takes place; and the organizational arrangements that are useful under one scenario but become obsolete under alternative scenerios (and not necessarily because all economic stages are inefficient).

1.4.3 Small Scale Industry Revisited

The third theme represents an attempt to assess the role of small industry, in a static as well as a dynamic context, and its effect on the development of Egypt. The usual arguments of the strengths and weaknesses of small industry will be examined in the context of some institutional and behavioral variables to determine whether they remain valid. The capital efficiency of small enterprises, its labor intensity, and its use of low opportunity cost resources are some of the main arguments in favor of promoting small enterprises. These considerations are expanded to include assessments of the small firm's growth and ability to change, and other qualitative performance attributes. It is anticipated that many strengths will remain and a tentative image of a

progressi

some init

have it w

Wh

institut

good pers

textile s

research

While no

comprehe

involved

evolutio

perspect

policies

T

2, which

that cha

comparat

research

differe

and dem

analyzi

progressive subsector using small firms will be put forth, along with some initial thoughts about the environmental and regulatory needs to have it work.

1.4.4 Development Implications

While it is clear that development is a "political, technological, institutional, economic and cultural phenomnenon", it is argued that a good perspective can be given, at least for the contribution of the textile subsector, by using the performance criteria developed in this research and the evolutionary perspective considered (Hirschman, 1981). While not completely comprehensive (and it not possible to be completely comprehensive), it does shed light on some of the wider dimensions involved in questions about development and by considering the evolutionary implications, frames the research in a longer term perspective. Hopefully, with this effort, the possible consequences of policies can be seen more clearly and better policies can be made.

1.5 A Preview of the Research

The research begins with a standard methodology chapter, Chapter 2, which includes a discussion of the sources of data used. Following that chapter, there are four chapters that lay out the results of the comparative statics analysis. These chapters represent the core of the research. Chapter 3 presents an overview of the subsector from several different perspectives, and Chapter 4 examines the economics of supply and demand in detail. Chapter 5 is concerned with the results of analyzing the coordination mechanisms used in the subsector. Chapter 6

gives a d

regulator

Th

analyses.

current p

the subse

Chapter 9

research

improveme

gives a discussion of the environment, including the macroeconomy and the regulatory and institutional features of interest.

The remaining chapters extend the results given in the previous analyses. Chapter 7 presents the evolution of the subsector from its current position, and Chapter 8 analyzes the problems and potential in the subsector, and offers several suggestions for improved performance. Chapter 9 presents conclusions relative to the major themes in the research and discusses some recommendations for further research and improvements in the methodology.

Th

Egyptian

as develo

section.

analysis

the sour

T

subsecto

illustra

assessme

the deve

F

performa

develope

appropri

these di

economi

particu

CHAPTER 2

RESEARCH METHODOLOGY AND DISCUSSION OF MAJOR ISSUES

2.1 Introduction

The focus of this chapter is the framework used to analyze the Egyptian textile subsector. The fundamental approach, subsector analysis as developed at Michigan State University, is outlined in the first section. An elaboration of the basic variables of interest in this analysis is also included in that section. Next, a section deals with the sources of data used.

The second major topic of Chapter 2 is the evolution of the subsector. An analytical framework for analyzing this evolution is illustrated in the second section below. A third section contains an assessment of the potential contributions of small scale enterprises to the development process.

Finally, one of the major objectives of this research is improving performance in the development process, and a discussion of the image of development and the criteria that determine good performance is appropriate. Therefore, the fourth section presents some thoughts on these dimensions.

2.2 The Subsector Approach

The subsector approach is a "systems" approach to the study of economic activity. It emphasizes the interdependence of economic units, particularly those in the production and distribution process. This

interdepe
dynamics
can also
implicati
changes o

Hi
agricultu
through w
their ult
been deve
departmen
professio
issues i
analysis
1973, an
attempt
Mclaughl
followin

A
in the h
producti
individu
mechanis
particip
three e

interdependence is considered central to the understanding of the dynamics of change and evolution. In addition, the subsector approach can also be used for comparative static analysis, to examine the implications of alternative development patterns or alternative policy changes or project interventions.

Historically, virtually all early subsector work focused on agricultural commodities, describing and evaluating the economic networks through which individual commodities are transformed and distributed to their ultimate consumers. Although this brand of commodity analysis has been developed at both business schools and in agricultural economics departments, it is the marketing literature of the agricultural economics profession that has most thoroughly developed the analytical methods and issues involved. Key works in the intellectual history of subsector analysis include Mighell and Jones (1963); Goldberg(1968); Shaffer (1968, 1973, and 1980); French (1974); and Marion (1976.) Two works that attempt to trace the historical development of subsector analysis include Mclaughlin (1983) and Haggblade (1984.) The exposition given in the following sections is adapted from Boomgard (1984.)

2.2.1 Key Subsector Concepts

A product begins as a raw material and ends as a finished product in the hands of consumers. This progression through a production/distribution system involves three central features: a) the individual steps or transformations through which a product goes; b) the mechanisms for linking one step with another; and c) the actors or participants who are engaged in these activities. In discussing these three elements of product movement, a main tool, the subsector map, is

used. (Se

2.

productio

These ste

productio

weaving a

component

space, ti

transport

manufactu

separated

include

again.

the rese

2

performe

or coord

coordina

firm or

decision

spot mar

the comp

producti

differer

differer

shown by

functio

used. (See Figure 2.1.)

2.2.1.1 Functions. Each step or transformation in a sequence of production or distribution activities will be referred to as a function. These steps are most easily described in terms of a progression of production activities. For example, ginning cotton, spinning yarn, weaving and then printing cloth, and, finally, making garments, are the component functions required to make a garment. Transformations in space, time, and ownership are also important, which makes retailing, transportation, and storage as important as the steps in the manufacturing process. The functions themselves can generally be separated into finer components. Transportation, for example, may include loading a truck, driving it to its destination, then unloading it again. The precise definition of one function depends on the needs of the research.

2.2.1.2 Coordinating Mechanisms Between Functions. The functions performed in a production/distribution system need to be linked together or coordinated. In broad outline, there are two ways in which this coordination can be achieved: a) through a hierarchical system within one firm or one central planning bureau, where the owners or managers make decisions and then issue instructions; or b) through sales, either in spot markets or based on forward contracting. Forward purchases involve the completion of functions "on order," including contract or subcontract production. Several conventions are given in Figure 2.1 to show how different types of linkages are made. Different arrows refer to different types of markets and contracts, and vertical integration is shown by physically drawing enterprise boundaries across several functions.

Function
Retailing

Function
Wholesali

Function
Productio

Function
Input Su

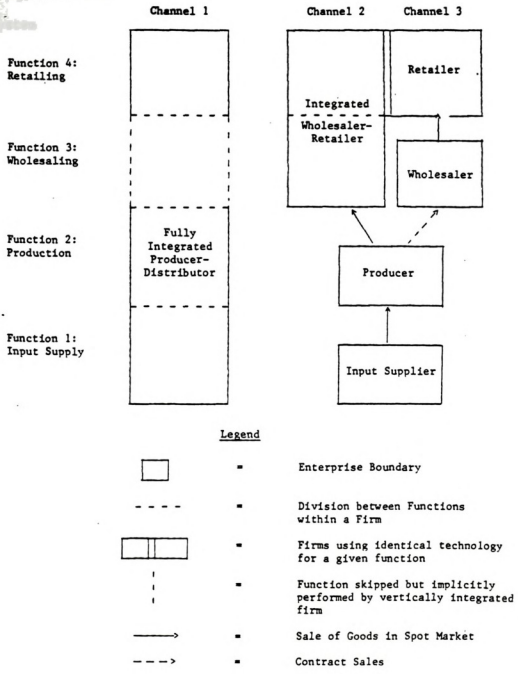

Figure 2.1

The Basic Subsector Map

2.2

productio

system.

different

and the t

the subse

box refer

term "fir

2.

Function

subsecto

that is

or group

literatu

firm-gro

channels

product

transfo

product

beginni

sometim

A furth

it is e

creati

channe

and re

2.2.1.3 Participants. The third feature of interest in a production/distribution system is the actors, or participants in the system. The actors are fundamentally differentiated by the number of different functions they perform or the degree of vertical integration, and the techniques of coordination used to link functions. Each box in the subsector map refers to a unique participant. To indicate that each box refers to more than one firm, discussions about them will use the term "firm-group" to denote an individual box on the subsector map.

2.2.1.4 The Subsector Grid and the Creation of Channels. Functions provide the horizontal dimensions for the grid on which the subsector map is laid. By taking a horizontal slice of the subsector, that is by identifying all the firms that perform a particular function or group of functions, one defines what the industrial organization literature refers to as an "industry." Industries are thus comprised of firm-groups.

The vertical dimensions of the grid represent the alternative channels in the subsector. Any traceable path through a production/distribution system defines a channel of product transformation. Figure 2.1, for example, shows three alternative production/distribution channels. Channels are often separate from the beginning raw material through to the final product. However, this will sometimes not be the case, as channels 2 and 3 in Figure 2.1 illustrate. A further defining characteristic of a firm-group is the channel in which it is embedded.

Perhaps the greatest difficulty in specifying a subsector is creating the alternative channels. The objective is generally to create channels that will have systematically different strengths, weaknesses, and resulting patterns of change. This approach highlights the

importance
groups wit
overlaid
firm-group
firm-grou
concentra
technolog
and so on
vertical
these dif

2.

then, is
productio
related
always b
resource
producti
channels
horizont

T

in Chapt
product
data is

shapes

importance of vertical relationships and the linkages between different groups within the subsector. In addition, some useful information can be overlaid onto the basic grid to assist in describing channels or firm-groups: the volume of the product handled by any one firm or firm-group in a particular function (the extent of horizontal concentration); the resulting scale of operation and types of production technology adopted within each function (capital intensity, modernity, and so on); and the aggregation of value added as it grows through the vertical transformation process. The channels are finally specified when these different variables are understood.

2.2.1.5. The Subsector as a Collection of Channels. A subsector, then, is an aggregation of alternative channels through the production/distribution system for one product or a group of closely related products. The precise delineation of a particular subsector will always be a matter of judgement and will vary depending on the goals and resources of the study. Regardless of the breadth of a production/distribution system, it will be composed of alternative channels and in this way will draw attention to vertical as well as horizontal relationships in the economy.

The subsector map for the textile subsector in Egypt is presented in Chapter 3, along with the summary data on employment, volume of production, and value added in the subsector. The compilation of that data is given in Appendices 1 - 3.

2.2.2 The Environment

The subsector operates in a context -- an environment -- which shapes the opportunities of participants in the subsector. In fact, the

environmen

channels.

b) the inf

The

customs de

regulation

the intera

examples o

access to

about mar

about the

the struc

aspect of

primary p

making it

as the co

newspaper

organizat

the qual

system.

mechanis

2

have an

behavior

actors w

institut

subsecto

environ

environment is often instrumental in the development of particular channels. The environment has three important components: a) the rules; b) the information flows; and c) the service institutions.

The rules include the business laws of the country as well as the customs defining normal and acceptable behavior. They include regulations that affect the internal operation of functions as well as the interaction between functions. Labor laws versus contract laws are examples of this difference. The environment also structures who gets access to what information. The knowledge about technological processes, about markets, about qualities and prices of inputs and outputs, and about the rules of the game and the service institutions is affected by the structure of the environment. The service organizations, the third aspect of the economic environment, are input suppliers that are not primary participants in the subsector but that have important roles in making it work. They include organizations that enforce the rules, such as the courts, and also sources of relevant information, such as newspapers, radios and telephones, and training centers. Some of these organizations supply inputs themselves (for example credit) or improve the quality of inputs (such as labor) available to participants in the system. These peripheral institutions provide functions, coordinating mechanisms, and participants in some sense to the subsector.

2.2.2.1 The Image of a Dynamic Environment. The environment can have an active influence on the growth and change of the subsector. The behavior of the subsector affects the environment, or at least certain actors within the environment, who can then change the rules, the service institutions, or the information flows in response to the behavior of the subsector participants. Major links between the subsector and the environment include links to the macroeconomy and to the major factor

markets, s
resources
can also e
of the gov
and as the
conditions
environme
problems
current t
society.

2

H
channels
the appr
used --
subsecto
and char
issues
2.3.1 U

allocat
analyzi
the sub
are of
maximi

markets, such as for raw materials or labor, or to the financial resources needed from the wider economy. Participants in the subsector can also expect different influences from the environment as the ideology of the government change and create widely differing policy environments, and as the main goals of the society change in response to changing conditions. In summary, the impact on the subsector of an evolving environment can be assessed by understanding the major factor markets and problems in the macroeconomy; the policy environment with its history and current trends; and the ideology and development goals in the wider society.

2.3 A Comparative Analysis of Channels in the Subsector.

Having identified the subsector framework, with its focus on channels and their change and evolution, it is then necessary to outline the approaches used to assess that change. Two distinct approaches are used -- microeconomics and an evaluation of coordination within the subsector -- which together set the stage for an analysis of the growth and change in the subsector. The subsections below define the major issues considered in each analysis.

2.3.1 Using Microeconomics to Evaluate Costs and Profits in the Subsector

Microeconomics provides a variety of categories for analyzing the allocation of resources within a market economy. These are of use in analyzing where resources will be directed as prices and costs change in the subsector. The fundamental driving forces that allocate resources are of course firms trying to maximize profits and consumers trying to maximize utility.

The

straightfo

and then e

considerat

picture o

Th

real fina

by making

economic

improveme

resolve

than many

border p

factors

function

Nonethel

differir

(Howeve

financia

Appendi

are pre

analyze

can exp

circums

a grea

presen

The use of budgeting techniques is perhaps the most straightforward method of analyzing microeconomics. Usually financial and then economic budgets are constructed for the firms under consideration. This method is used in this research to give the basic picture of each firm-group in the subsector.

The financial analysis will drive the system, since it shows the real financial gain to actors in the subsector. Economic analysis, done by making adjustments to prices and transfers to reflect the "true" economic costs and profits, has the power to show where policy improvements can yield a better performing system. However, without the resolve by governments to take the actions required it is less powerful than many have hoped. Also, economic analysis is based on the use of border prices, on elusive measures of opportunity costs of different factors of production, and on a general equilibrium paradigm of perfectly functioning markets, all of which make economic analysis less reliable. Nonetheless, both analyses will be done to arrive at an estimate of their differing conclusions but less emphasis is placed on economic analysis. (However, some elements of economic analysis are contained in the financial budgets created.) The financial analyses are created in Appendices 1 - 3, and summarized in Chapter 4, and the economic analyses are presented in Appendix 4.

The role of profits in directing changes in the subsector is analyzed in the most depth in this research. The more profitable firms can expand more rapidly, are better prepared to handle adverse circumstances, and can diversify more rapidly because they have access to a greater stream of profits. They are thus able to increase their presence in the subsector.

Also of interest is the ability of previously less profitable

firms to v

production

least cost

"competing

happen to

respond to

considera

techniques

2.

whether t

firm-grou

both smal

The first

the diffe

to expand

market sh

profits

greater

growing

availabl

reinvest

from oth

W

economic

to a fi

not pro

next le

firm ca

firms to vary fixed factors of production to move to the least cost production techniques. In the presence of a competitive market moving to least cost production technique results in the familiar process of "competing away the excess profits." This offers a model of what might happen to different firm-groups as technology is dispersed and all firms respond to competition. It is not the only model, but it is one of considerable predictive power, and much can be assessed using budgeting techniques.

2.3.1.1 Analyzing Total Versus Marginal Profits. The question of whether total profits or only marginal profits matter when considering a firm-group's ability to expand is important. If an industry is made of both small and large firms, then which groups will expand more rapidly? The first determinant would be the level of profit per unit of capital in the different sized firms. A large number of small firms would be able to expand more rapidly than a group of large firms that had the same market share (or capacity) if as a group the small firms had higher profits per unit of capital. The many small firms would then have greater profits and be able to expand more quickly. If the market was growing faster than the industry's ability to expand, the profits available would be the main determining factor since all firms would be reinvesting as quickly as they could and would not be taking away markets from other firms in the industry.

While marginal profits are the most prevalent concern in economics, they do not give the whole story. The total profits available to a firm are also important. A high per unit profit in a small firm may not provide enough capital to buy the most efficient technology for the next level of production. There may be economies of size that a small firm cannot purchase because of its lack of resources.

The

instance,

certain me

operations

beyond a c

effective

unit prof

Th

profits h

Given a s

employ th

human cap

investmen

but they

always be

differen

product

of the m

taken ex

aggregat

that a s

differe

to prod

transpo

The num

deliver

critica

These include lumpy costs beyond technology as well. For instance, it may require a certain production level to justify using a certain medium for advertising. The small firm may not have the scale of operations to justify its use; therefore, it has difficulty expanding beyond a certain point because it cannot reach its potential consumers effectively enough to expand in the proportions indicated by a high per unit profit.

The second issue in the comparison between per-unit and total profits has to do with business strategy and the employment of profits. Given a stream of profits, there are innumerable choices about how to employ them, including adding more laborers or capital, investing in human capital or advertising, or dropping prices. Any of these investments would be undertaken if they would pay off at a certain point, but they are taken under conditions of uncertainty. It will almost always be true that larger businesses can more easily experiment with different options on a partial basis. A large firm may drop prices on a product line in a particular market or add capital to service only part of the market. Business strategy in the real world can almost always be taken experimentally by large firms. While it may be true that, in the aggregate smaller firms "experiment" in these directions, it is not true that a small firm retains the beneficial learning from that experience.

2.3.1.2 Analyzing Costs Through a Channel. Channels may have a different number of stages and may use different sequences of activities to produce products. They may, furthermore, have different transportation requirements and different ways of holding inventories. The number of stages, along with their costs, determines the final delivered cost to the consumer, so a relatively costly stage could be critical to the functioning of an otherwise low-cost channel. All

functions

the final

cheapest.

Ad

complex c

transport

easily be

number of

and could

in which

may be ir

F

integrat

transact

the syst

T

is "head

However,

cost for

clothing

However,

issues.

2.3.2

transfo

vertica

functions should be assessed together and their costs summed to compare the final delivered cost to the consumer to see which channel is the cheapest.

Additionally, the number of distribution steps involved in a complex channel could significantly affect the cost. Even if transportation or storage is only 2-4% of the cost at each stage, it can easily become a major portion of the final cost if there are a large number of steps. The product held in storage differs with the channels and could vary considerably. It is also important to consider the form in which the product is held, because that can raise or lower costs and may be in forms that are riskier to hold.

Finally, the type of transaction affects costs. Vertical integration and markets are appropriate for different types of transactions, and it is quite possible, because of the past evolution of the system, that the current vertical relationship is inappropriate.

The need to minimize costs will be most important when competition is "head-to-head," with competitive markets and homogeneous products. However, not all competition is based on grinding down costs to the least cost form of production. Non-price competition is quite prevalent in the clothing business, where labels, fashions, and products proliferate. However, it is more difficult to use microeconomics to analyze these issues.

2.3.2 Markets, Vertical Integration, and other Coordination Mechanisms

In the subsector approach a major concern is coordinating the transformation of the raw product through all of the potentially numerous vertical stages until it is in the hands of a consumer. Coordination

becomes a

complexit

these con

and deman

in elemen

in the in

the real

5.

It

coordinat

economy

observed

many int

variety

these tw

A

is an an

Variatic

standard

effectiv

it has

the tra

vertica

Using t

the str

a major

"Channe

becomes an issue when the real-world phenomena, such as uncertainty, complexity, and a dynamic context, are brought into the analysis. Under these conditions, the mechanisms needed to create a match between supply and demand are more complex than the simple coordination by price assumed in elementary microeconomics. Often these additional mechanisms operate in the interests of reducing costs because of the difficult conditions in the real world. The analysis of the following issues is done in Chapter 5.

It is generally recognized that there are two fundamental coordination mechanisms that are typically considered options in a market economy -- markets and vertical integration. What is less generally observed is that these options represent a continuum on which there are many intermediate forms of linkages between buyers and sellers. A variety of contracting mechanisms can often be preferable to either of these two pure forms. (See Mead, 1984; Shaffer, 1985; and Porter, 1980.)

A useful supplement to the the focus on markets versus hierarchies is an analysis of the details of the market, contract, or hierarchy used. Variations in the details of the coordination mechanism used, or in the standard operating procedures (SOPs), can have an impact on the effectiveness of the coordination. In several instances in this research it has proven useful to understand the details of the SOPs in relation to the transactions between different firm-groups. The internal SOPs of vertically integrated firms are generally beyond this research.

Finally, by assessing the coordination mechanisms, and also by using the volume and value added statistics that are compiled to identify the structure of the subsector, the firm-groups whose decisions will have a major influence on the subsector can be identified. These firms, the "Channel Captains," can often be the targets of projects or policies to

improve pe

Som

mechanisms

follows Me

2.

Some comm

performed

cheaper t

temperatu

reheated.

heavy or

distances

Be

of decis

related

aggregat

allowing

raw mate

to go to

run at a

I

are able

labor ma

areas),

(such a

regulat

ownersh

improve performance in the subsector.

Some of the issues associated with the choice of coordination mechanisms and how to analyze SOPs are discussed below. (This section follows Mead, 1984.)

2.3.2.1 Technological and Scale Factors Affecting Coordination. Some commodities can be processed more efficiently if two functions are performed closely together, as in a vertically integrated firm. It is cheaper to perform one function just after another when both require high temperature, as in steel production, than if the product has to be reheated. Vertical integration is thus appropriate. Products that are heavy or bulky are also more efficiently processed when transport distances are small, making vertical integration appropriate.

Besides these strictly technological concerns, there are a number of decisions regarding the choice of a coordination mechanism that are related to "make or buy" decisions. Markets are very effective in aggregating dispersed and relatively small demands from purchasers and allowing them to be supplied by a producer of efficient size. Thus, for raw materials that are demanded in small quantities, it is usually better to go to the market for supplies rather than construct a facility that is run at an inefficient scale.

It also may be cheaper to go through the market when other firms are able to produce an input more cheaply because of access to different labor markets (such as location in different countries, or in rural areas), or have better access to raw materials, or face fewer regulations (such as small firm exemptions from certain labor and health regulations.) Finally, it may be better to avoid the fixed costs of ownership when demand is variable.

2.3.2.2 Overcoming Limitations in Business Capabilities. It is

often neces
limitations
coordinate
includes bo
flexibility
hand, it ma
stage to pa
better thar

If

improved t
stage, the
Again, the
contain a
qualities.
and miss s
may lose t
more attra

Of

increased
firms can
able to s
of each f

2.

that firm
or inform
relations
than is
through

often necessary to use different coordination mechanisms to overcome limitations of individual businesses. Most firms need to use markets to coordinate production simply because of capital constraints, which includes both the absolute cost of purchasing capacity and the decreased flexibility associated with increased operating leverage. On the other hand, it may be to a firm's financial advantage to integrate into another stage to participate in higher return activities when the profits are better than in their base business.

If a firm's technical capabilities in its base business can be improved through a more detailed understanding of an earlier or later stage, then vertical integration may help them improve their production. Again, there is the other side of the issue as well. Markets generally contain a lot of information about alternative products and their qualities. A vertically integrated firm may lose touch with the market and miss some of the improvements in input characteristics. They also may lose the ability to change suppliers easily if another one becomes more attractive.

Often, combining firms result in larger entities that have increased bureaucracies and increased managerial difficulties, which some firms cannot cope with very well. Alternatively, certain firms may be able to spread overhead across a number of functions, reducing the cost of each function.

2.3.2.3 Issues Related to Markets and Contracts. One major reason that firms enter into long-term contracts with suppliers, either formal or informal, is that the transactions costs are reduced by more stable relationships with suppliers and a more extensive exchange of information than is conveyed through spot markets, where the main information comes through relative prices. Thus failures of the perfect market may need to

be correct

(Lall, 198

Pur

different

more effic

This is of

correct is

products.

which wil

opportuni

incentive

Th

thin mark

future ca

informati

shared a

relations

T

and the

Williams

types of

bounded

in trans

the diff

reliabi

accordi

rationa

transac

be corrected by improving linkages to gain efficient economic activity (Lall, 1980.)

Purchasers of inputs often need complicated combinations of different qualities of inputs, and discussing the specifications is far more efficient than using relative prices to accomplish that activity. This is often true in the textile industries. Also, getting proportions correct is further complicated by the time required to produce the products. It often takes considerable time to produce a needed input which will not be started until an order has been received. If opportunistic behavior results in a failure to deliver, there is a strong incentive for stable relationships with known participants.

There is often a need for coordinated expectations when there are thin markets and few participants (Lall, 1980, Shaffer, 1985.) To get future capacities correct requires a reasonable profit and shared information regarding future needs. Thus, shared expectations and a shared allocation of profits are required. This again argues for stable relationships among buyers and suppliers.

The most fully developed theory dealing with transactions costs and the kind of coordination mechanism that is likely to prevail is Williamson's (Williamson, 1981.) He argues that the question about the types of economic organization is only interesting in the presence of bounded rationality and opportunism. Agents exhibit bounded rationality in transactions because of the complexity of some transactions' demands, the difficulty in assessing future needs, and the problem of knowing the reliability of other producers. Transactions can be categorized according to how susceptible they are to the problems of bounded rationality and opportunism. This is in part related to the frequency of transactions and how standardized the product being traded appears.

Als
transactio
of coordin
characteri
which site
transactio
of possib
bargainin
produced
Wi
into acco
uses as a
organizat
costs.
1981, p.
asset sp
specific
be spot
vertical
external
a manufa
Manufact
they ha
recogni
decisio
consist
vis a v

Also, the "degree to which transactions are supported by durable transaction specific investments" is a factor that influences the choice of coordination mechanism (Williamson, 1981, p. 1546.) This third characteristic, asset specificity, has three dimensions. The degree to which site, physical, or human assets are designed especially to take transactions into account will cause the transaction to change from one of possibly large numbers to one of small numbers, or even to a bilateral bargaining situation, so that the surrounding market and the prices produced in that market are not of the usual relevance.

Williamson then argues that organizations take these situations into account by using several principles of organizational design. He uses as a starting point the fact that markets will be the preferred organization "unless market exchange gives rise to serious transactions costs. In the beginning, so to speak, there were markets" (Williamson, 1981, p. 1547.) The first principle of organizational design is the asset specificity principle, which says that the more transaction specific investments that are made, the less likely it is that there will be spot market exchange, and varieties of contracting proceeding towards vertical integration will increase. The second principle, the externality principle, relates to problems with quality deterioration as a manufacturer's products are released through distributors. Manufacturers will tend to purchase their own distribution channel when they have differentiated products and problems with suppliers.

2.3.2.4 Standard Operating Procedures. It has long been recognized, the assumptions of microeconomics notwithstanding, that human decision-makers do not appear to have the available choice set, a consistent value structure, or the capability to analyze possibilities vis a vis values in any complex situation (Simon, 1986, pp. 3-12.)

Rather tha

to using s

sufficient

decisions.

without da

The rules

organizati

organizati

In

abandoned

p.102.)

performan

are to be

informati

handling

who gets

control

allocate

T

feedback

their pr

of many

the feed

input --

a work s

rule-gu

person,

The act

Rather than undertaking a superhuman calculus, they have often resorted to using simple rules, or standard operating procedures, which are sufficient because the world is "empty" and tolerant of less than optimal decisions. This emptiness further allows sequential attention to issues without damaging those issues left unattended. (Simon, 1986, pp. 19-20.) The rules also function as a truce between competing factions within an organization and also as an implementation of the larger goals of the organization (Nelson and Winter, 1982, pp. 107-124.)

In general, these rules are simple and directive, and are abandoned only when they clearly do not work (Cyert and March, 1963, p.102.) Cyert and March indicate four major kinds of SOPs: (1) task performance rules, which describe how the jobs within the organization are to be done; (2) records and reports, concerning the major sources of information and variables requiring control in the firm; (3) information handling rules, especially routing and filtering rules, which determine who gets what information at what time; and (4) plans, which operate as control mechanisms -- as goals, schedules and theories about how to allocate resources (Cyert and March, 1963, pp. 103-112.)

The structure of the rules is highlighted by Cyert and March. The feedback-control relationship is highlighted by Nelson and Winter in their presentation of routines, in which they emphasize the tacit nature of many of the rules (Nelson and Winter, 1982, pp. 96-136.) Emphasizing the feedback-control loop, they assert that a routine is activated by an input -- the time of day, a memorandum, a discussion, a part arriving at a work station -- and an output follows from the activity of the rule-guided behavior. The output may be only information sent to another person, or it may be as momentus as the decision to buy a new factory. The activity within the routine proceeds somewhat autonomously, with a

predetermin

materials,

The

together pr

routines o

the factor

pays atten

involved;

and how th

Th

research

reduce co

specific

example b

illustra

These la

research

These ca

manageme

require

the ana

in the

most f

(MSU)

predetermined sequence of activities that involve people, space, time, materials, machines, information, and skills.

The viewpoints of Cyert and March and of Nelson and Winter together provide a good picture of how to approach a description of routines or SOPs: describe the rules, the sequences of activities, and the factors involved in a particular routine. A description of a SOP pays attention to the tasks, records, information flows and plans involved; the sequence of activities undertaken; and the resources used and how they are bound together.

The analysis of routines can take a number of directions. In this research most of the analysis is directed toward the way that routines reduce costs and improve coordination in the face of uncertainty. The specific analyses include the nature of some of the transactions, for example between the tailor and the final consumer, as well as some that illustrate the firms' attempts to coordinate demand or anticipate supply. These latter categories include the use of advertising and merchandising, research and development, and the use of credit as a coordinating tool. These categories were selected from a list of functional categories of management (Porter, 1980, p. xvii; See also Kilby, 1971.)

2.4 Sources of Data Used in the Research

The methodology set forth in the previous sections quite clearly requires a substantial amount of data to achieve any kind of precision in the analysis. The sources of data used in this work varied substantially in their depth. There are five main data sources, listed below from the most formal to the least formal work: (1) the Michigan State University (MSU) Rural Non-Farm Employment Phase I and Phase II surveys; (2) the MSU

Entreprene

during the

administer

survey; (4

and (5) se

uses of th

below.

Be

the objec

a part, t

mentioned

Project,

the Offi

Technolo

Enterpri

project

enterpri

employme

attempt

subproj

researc

detail

depth

summar

Entrepreneurship Questionnaire, administered to all survey participants during the Phase II survey; (3) the MSU Special Tailoring Questionnaire, administered to all tailors and dressmakers during the MSU Phase II survey; (4) selected subsector interviews, administered by the author; and (5) selected secondary sources. The objectives, sampling frame, and uses of the different sources of data are discussed in separate sections below.

Before discussing the individual data sets used for this research, the objectives and goals of the larger project of which this research is a part, the Rural Non Farm Employment Project - Egypt, should be mentioned. This project was a subproject of the Off Farm Employment Project, which was administerd by Michigan State University and funded by the Office of Rural and Institutional Development, Bureau of Science and Technology, USAID. (The succeeding project is called the Small Enterprise Approaches to Employment Project.) The main objective of the project was to estimate the quantitative significance of small rural enterprises in a number of countries, in terms of the number of firms and employment and other economic magnitudes. Additionally, the project attempted to find ways to assist those small enterprises. The Egypt subproject was the last of six survey efforts. This dissertation research has been undertaken under that final subproject.

The following sections discuss each of the data sources in some detail. For some sources it made more sense to present the data in more depth in another section of the research, so only references and summaries are made here.

2.4.1

Th

1983 in t

relativel

Both area

populatio

the surve

assumed

T

designed

governor

by popul

from eac

to disc

excepti

al., 19

small t

have th

dairy

Also,

in Kal

groups

sample

costs,

2.4.1 The MSU Rural Non-Farm Employment Project - Egypt Phase I and Phase II Surveys

The Phase I and Phase II surveys were done during 1981 through 1983 in two governorates of Egypt, Kalyubiya and Fayoum. Kalyubiya is a relatively industrialized governorate while Fayoum is relatively rural. Both areas had about one million people for which the small enterprise population was estimated. (One major city in Kalyubiya was left out of the survey, since it was really a northern suburb of Cairo, and it was assumed to have a quite different composition of enterprises.)

The Phase I survey, undertaken during July and August of 1981, was designed to provide an overview of the small enterprises in the two governorates under consideration. The villages and towns were stratified by population size, and then a sample of villages and towns was drawn from each stratum. These sampled villages were censused, door-to-door, to discover as many household enterprises as possible. (Several exceptions to this methodology were made and are discussed in Badr, et. al., 1982.)

The results of the Phase I survey are given in Table 2.1. The small tailors and dressmakers are quite extensive. In Kalyubiya they have the second largest number of firms and employees, following only dairy production, a part-time activity done usually by female farmers. Also, with an average size of 1.24 employees in Fayoum and 1.78 employees in Kalyubiya, the small firms are very small.

In order to estimate the economic budgets for the major industry groups, 426 firms from 13 industries were selected from the Phase I sample to be interviewed weekly or bi-weekly regarding their sales, input costs, labor use, and wages paid. This survey, the Phase II survey, was

Table 2.1 Estimated Total Employment in Fayoum and Kalyubiya by Sex and Employment Category -- 1981

Table 2.1 Estimated Total Employment in Fayoum and Kalyubiya by Sex and Employment Category -- 1981

	Males	Females	Total	Family	Hired	Apprentice
FAYOUM						
Food: Dairy Products	276	37,346	37,622	37,556	50	16
Other Food	2,978	165	3,143	1,695	1,182	266
Total Food	3,254	37,511	40,765	39,251	1,232	282
Textiles	6,982	7,955	14,938	12,971	1,339	628
Wood Products	4,071	3,808	7,879	6,234	1,040	605
Paper and Printing	105	41	146	51	46	49
Chemicals	828	44	872	213	610	49
Non-metallic Minerals	3,026	536	3,562	1,742	1,549	271
Metal Products	953	7	960	471	320	169
Other Manufactures	108	18	126	104	18	4
Repairs	1,857	14	1,871	1,033	477	361
Subtotal, excluding Dairy	20,909	12,588	33,497	24,514	6,581	2,402
Province Total	21,185	49,934	71,119	62,070	6,631	2,418
KALYUBIYA						
Food: Dairy Products	472	34,047	34,519	34,168	235	116
Other Food	3,669	930	4,599	2,805	1,658	136
Total Food	4,141	34,977	39,118	36,973	1,893	252
Textiles	7,794	5,772	13,566	8,275	3,439	1,852
Wood Products	4,829	133	4,962	2,399	2,227	336
Paper and Printing	83	9	92	38	50	4
Chemicals	167	2	169	24	137	8
Non-metallic Minerals	1,911	112	2,023	560	1,317	146
Metal Products	2,201	24	2,225	1,152	861	212
Other Manufactures	17	0	17	10	4	3
Repairs	3,960	21	3,981	2,196	1,230	555
Subtotal, excluding Dairy	24,631	7,003	31,634	17,459	10,923	3,252
Province Total	25,103	41,050	66,153	51,627	11,158	3,368
GRAND TOTAL, BOTH PROVINCES						
Excluding Dairy Products	45,540	19,591	65,131	41,973	17,504	5,654
Including Dairy Products	46,288	90,984	137,272	113,697	17,789	5,786

Source: Survey Data, Phase I

administer

In

interview

in Fayoum

Kalyubiya

the Kalyu

firms car

characte

T

economy

Addition

other su

of the

dressmal

survey

covere

and hi

market

contac

future

used

but a

administered from December 1981 to December 1982.

In the Phase II survey, there were 31 tailors and 34 dressmakers interviewed in Kalyubiya, and 15 tailors and 19 dressmakers interviewed in Fayoum. Most of the data used in this research is taken from the Kalyubiya sample, since it was better known to this author, who managed the Kalyubiya project, and also because comparisons indicated that the firms came from the same distribution with respect to their main economic characteristics.

This data is used for almost all of the budget estimates and economy wide estimates of the size of the tailoring industry. Additionally, these surveys provided the respondents for several of the other surveys. Because of the depth of these surveys, the strongest part of the research, in terms of evidence, is about the tailors and dressmakers.

2.4.2 The MSU Entrepreneurship Questionnaire

This questionnaire was given to all respondents in the Phase II survey in two parts, and each took about an hour to administer. They covered certain supplemental areas of interest, such as the organization and history of the firm; characteristics of the owner; the capital stock; marketing patterns and links; the labor force and contract; the firm's contacts with government and financial institutions; and the problems and future prospects of the firm as perceived by the owner. This data is used mainly to discuss the economic budgets of tailors and dressmakers, but also for some of the analysis of coordination mechanisms.

Th

in Kalyub

products;

the growt

competiti

the volu

identifi

mechanis

T

estimate

mechanis

functio

of them

coordin

side of

provide

supplem

2.4

the co

accomp

2.4.3 The Special Tailoring Questionnaire

This questionnaire was given only to the tailors and dressmakers in Kalyubiya to get information about the amount of cloth in different products; some business practices used by tailors; their perceptions of the growth and change in certain product lines and the nature of the competition in their business. This questionnaire was used to compile the volume statistics given in Chapter 3, and it was also useful in identifing some of the standard operating procedures and coordination mechanisms in Chapter 5.

2.4.4 The Subsector Interviews

Twenty additional firms in the subsector were interviewed to estimate some of the budget values, to understand their coordination mechanisms, and also to make estimates of vertical integration. The functions covered are discussed in Chapter 5, where the most use was made of them. This clearly represents a small sample for understanding the coordination mechanisms, but with overlapping observations (one from each side of the transaction) and extra informal observation, this survey has provided a base for an assessment of the coordination mechanisms and supplemental information for the budget analysis.

2.4.5 Secondary Sources: Government Data and Consultant's Reports

Much of the specification of the environment of the subsector and the compilation of the quantitative picture of the subsector was accomplished with secondary data. Government data and consultants'

reports f

budgets p

pieces of

budgets.

synthesi

T

consider

sources

access

corresp

committ

resourc

dissert

with ch

parts

synthe

conten

though

cohere

Where

repre

rural

rapid

reports from various USAID analyses provided most of the data. The budgets presented in this work, then, represent the synthesis of diverse pieces of data, with the exception of the tailoring and dressmaking budgets. The analysis of environment of the subsector is also based on a synthesis of the different secondary sources.

2.4.6 The Philosophy of Data Use

The effort to specify this kind of system in detail requires considerable data, which can either be collected or taken from other sources. In doing the research many typical problems were faced: lack of access to government data, a choice of units of observation that did not correspond exactly with the published aggregates, a major time committment in completing the Phase I and Phase II surveys, and limited resources. These problems are probably more often true than not in dissertation research. Furthermore, any time that a complex subsector with channels defined somewhat uniquely is going to be analyzed, certain parts of it will have to be specified using rough approximations done by synthesizing diverse data sources. Despite these limitations, it is contended that the value of putting together the system is high, even though there are inevitable holes and simplfying assumptions.

Considerable effort was made in this research to make the data cohere throughout the whole system, and it seems to be fairly robust. Where it is not and it is consequential, this is noted. This effort may represent a model of system specification in the spirit of the "rapid rural reconaiisence" literature, despite this research being neither rapid nor rural.

In
subsecto
static t
exists.
contribu
Therefo
time us
its bro
institu
of char
1971, p
The di
locati
econom
with t
system
on the
appro
attem
direc
model
descr

2.5The Evolution of the Subsector

2.5.1 Types of Dynamic Analyses

In the previous sections the variables used to analyze the subsector were presented. Most of those variables are conceived in static terms, describing the "state" of the subsector as it currently exists. However, most questions of policy or of the possible contributions of the subsector are really asked in a dynamic context. Therefore, there is a need to look into the dynamics of the subsector.

At the very least, economic dynamics includes stepping through time using what Hicks calls "statics over time" (Hicks, 1985, p. 7.) In its broadest sense, it includes some kinds of historical and institutional effects. Georgescu-Roegen recalls Aristotle's formulation of change as either of location, quantity, or quality (Georgescu-Roegen, 1971, pp. 60-62.) Location change can either be in space or in time. The difference equation models used in economics are usually models of location change, or mechanics. The broader conceptions of change in economics are those associated with change of quality, which has to do with the changes in the characteristics, or qualities, of the actors in a system. The impact of institutions and history impose unique qualities on the actors.

Evolutionary theory in biology constitutes the most systematic approach to the analysis of qualitative change. Because of this theory's attempts to handle changes of quality, economists have sometimes tried to directly incorporate the approaches of evolutionary theory into their models, even though the dominant theory has generally remained a description of location change.

Tw

Darwin's

guiding p

observati

character

pp. 42-5

mating c

success

the dire

companio

variatio

Variati

species

they ha

thus oc

peaceful

niches

(Nelso

this

analy

not t

the e

Two major branches of evolutionary theory have emerged since Darwin's identification of the law of the survival of the fittest as the guiding principle of biological evolution. The first derives from his observation that variation occurs in species, and that certain characteristics are then selected. (Gould, 1977, pp. 36-38; Simon, 1986, pp. 42-53.) In the process of competing for finite food supplies and in mating competition, the selfish gene attempts to further itself, and success is equated with survival. This line of thinking has emphasized the direct, head-to-head competitive nature of the world, and has a companion in economic theory in the competitive nature of markets.

The second line of thinking still retains the basic mechanism of variation and selection, but it views the world in a more benign way. Variation in characteristics gives special capabilities to different species so that they are able to co-exist in the same environment because they have different demands on it. The different actors in the system thus occupy different niches. Rather than a constant battle, a more peaceful existence results, with intermittent periods of competition as niches are revised or when two species try to occupy the same niche. (Nelson and Winter, 1982.)

2.5.2 Evolutionary Models in Economics

Several different models of evolutionary behavior are sketched in this section to provide the flavor of the approaches previously taken to analyze the evolution of a particular industry or economy. The intent is not to be comprehensive but to show the similarities of other models and the effort in this research.

Michael Porter offers one model of evolutionary behavior that has

received m

largely dr

that those

entities.

an indust

are liste

a parti

success

approac

evoluti

(Nelson

organi

becaus

togeth

sales,

organi

memory

received much exposure, at least in business circles (Porter, 1980.) It largely draws on the literature of industrial organization, and it shows that those concepts are of use in analyzing the evolution of economic entities. He presents 14 factors to use to analyze structural change in an industry. Since they will be important factors in this research, they are listed below:

1. long run changes in the growth of demand;
2. changes in the buyer segments served or types of consumers;
3. buyer's learning about product quality and costs;
4. reduction of uncertainty;
5. diffusion of proprietary knowledge;
6. accumulation of experience;
7. expansion of scale;
8. changes in input and currency costs;
9. product innovation;
10. marketing innovation;
11. process innovation;
12. structural change in adjacent industries;
13. government policy change; and
14. entries and exits.

Each one of these factors will change the competitive position of a particular firm-group and will change the characteristics of a successful firm. Many of the factors highlighted in the subsector approach are seen as important influences in Porter's approach to firm evolution.

A second evolutionary model is proposed by Nelson and Winter (Nelson and Winter, 1984.) Populations are firms and other business organizations that vary (have different characteristics or qualities) because they are composed of different routines. These routines, together with some differing economic magnitudes such as capital stock or sales, determine the capabilities and profits of the particular organization. Routines furthermore exist to preserve institutional memory and to act as a truce between often antagonistic elements within

an orga

other f

demand

of the

over ti

activit

The sur

which a

interac

the pro

unique

of shor

that se

time, t

other

evolut

econom

as the

the ev

partic

Mater

actor

Final

three

Three

an organization. They also provide the methods for a firm to imitate other firms, to replicate its own capabilities in response to changes in demand (by adding capacity or contracting), and to control the activities of the firm.

Variation occurs as the firms follow their routine-guided behavior over time to try to adapt to new circumstances. (They denote this activity as a search process, as is often done in evolutionary models.) The survival and expansion of the firm is directly related to profits, which are the sine qua non of survival and are determined from market interactions.

Firms are generally not thought to be optimizing in the sense of the profit maximizer in standard theory. Also, there is not really a unique equilibrium towards which the system is moving, but rather a set of short term balances that are leading at all times in the direction that search will take them. Thus, an equilibrium exists at a point in time, but there are always forces that are causing changes, if for no other reason than that profits are generated every year.

Kenneth Boulding presents an even more ambitious model of evolution, which considers the universe, rather than "simply" the economy, under its purview! He identifies three major "sagas" played out as the universe evolves -- the TOP, KEM, and TIE sagas. The TOP saga is the evolution of Things, Organizations, and People. These are the participants in the system. The TOP actors use Knowledge, Energy, and Materials (KEM) to modify, extend, and replicate themselves or other actors, thus causing a feedback that causes changes in the TOPs. Finally, this whole process is coordinated by the TIE saga, which are the three methods of reconciling actions among the multitudes of TOPs -- Threats, Integration, and Exchange.

pushes

an ana

the TC

profit

that t

partic

partic

are es

approp

Shaffe

using

from i

- Beha

or out

enviro

conseq

given

criter

envir

Bould

chang

of th

seque

them

econ

In a complicated way the interaction of these three components pushes the system forward. For the purposes of this research, there is an analogous set-up in the subsector. The actors are specified, so that the TOP saga is identified. The actors' sources of change in production, profits, and how they add functions and change channels are analyzed, so that the KEM saga is spelled out as well. The actions of the participants in the subsector are reconciled with the actions of other participants, and the resulting changes in the patterns of participants are estimated, using TIE-like linkages to funnel the feedback to appropriate actors.

A final example of evolutionary theories is the model proposed by Shaffer. He proposes that it is possible to see how a system evolves by using an expanded version of the Structure - Conduct - Performance model from industrial organization. For Shaffer, the model becomes Environment - Behavior - Performance. The environment either conditions, influences, or outright dictates the behavior of an individual, depending on how the environment is specified. The behavior of the individual has consequences, called the performance. (Note that this performance is not given a label of good or bad until measured against a set of performance criteria.) The outcomes of an individual's action feed back into the environment (presumably through one of the TIE mechanisms discussed by Boulding), so that the influences of the environment on the individual change. That revision in the environment changes the subsequent behavior of the individual, thereby affecting the next performance. Through this sequence of feedbacks and influences, a system evolves.

Each of the models presented has similar attributes. For all of them there are actors and actions (as there are in the standard micro economic models) and some kind of feedback that causes the indivduals to

take i

their

Firms

-- and

The re

firms

produc

to a u

prices

First,

intere

factor

how th

broade

series

to lea

Final

behav

so se

as th

evol

to a

take into account the consequences of their actions and thus to modify their behavior or other characteristics, or to evolve.

The basic microeconomics model can be viewed in this way as well: Firms take prices from the environment -- the factor and product markets -- and produce products using the decision calculus of microeconomics. The result of this action is positive or negative profits, which forces firms to modify their behavior by changing their product mix or production technology, or by going out of business. The system evolves to a unique equilibrium that is completely determined by the relative prices produced in the markets and the technologies of production.

The models are different from the basic model in some respects. First, the environment, the actors, and the types of actions that are interesting are specified more broadly than in microeconomics. Other factors are of importance in determining what the actors look like and how they behave. Furthermore, the kinds of feedback mechanisms are broader than just prices. There is no unique equilibrium, but rather a series of local and short-term balances as the system digests and begins to learn how to respond to the forces that are always producing change. Finally, rather than an optimizing process, most of these models make behavior a function of rules that are useful when there is uncertainty, so search has to play a central role in finding the appropriate behavior as the system continues to evolve.

2.5.3 The Subsector Approach as an Evolutionary Model

The subsector approach presented earlier fits an analysis of evolution quite well. First, the actors are closely specified according to a variety of characteristics so that many possible changes in their

qualiti

from th

be seen

be asse

the sub

by the

actors

conceiv

that th

approac

firm-gr

subsect

in some

models

and dis

expans

operat

will s

be ann

change

standa

evolu

terms

inter

speci

elem

qualities can be seen. Also, by viewing the system widely, the feedbacks from the actions of certain groups and their consequences on others can be seen. The alternative outcomes resulting from search activities can be assessed in terms of the impacts on the rest of the subsector. Within the subsector configuration, several existing forms of business are shown by the inclusion of different firm-groups, so that the liklihood of other actors evolving into them can be assessed. Finally, the environment is conceived as an active force that affects the subsector. Thus, it seems that the subsector approach naturally fits with these other evolutionary approaches.

Evolution is seen as the changing configuration of channels and firm-groups over time in response to changes inside and outside the subsector. The variables influencing that change have been spelled out in some detail in the earlier sections and in some of the evolutionary models presented in this section. They include the cost of production and distribution, the benefits of vertical integration, the potential for expansion, the impact of the environment, and the effects of standard operating procedures. Like chromosomes, the channels in the subsector will split into more channels, merge into one, perhaps twist across and be annexed by more distant channels, all in response to levels and changes in the variables mentioned before.

Many of the terms and feedbacks used in this analysis appear in standard economic analyses. The spirit of the research, however, will be evolutionary, although most of it is not written explicitly in those terms. The absence of optimizing concerns, the inclusion of system-wide interactions and the assumption that these matter, the wider specification of the qualities of the actors, and the concern, however elementary, with dynamics, all make the work here resemble the

evolutionar

is not myst

in fact so

"W

a questio

The most

enumerate

informat

importan

extent i

developi

enterpri

the Rur

effort

the ass

litera

relati

suppor

diffe

perso

flexi

large

marke

beca

evolutionary models discussed above. A final note is that the approach is not mystical, and therefore may appear to be familiar, while there are in fact some subtle revisions of spirit and content.

2.6 Small Scale Enterprises (SSE) Revisited

"Why make a distinction between large and small firms at all?" is a question that needs to be addressed, given the focus of this research. The most obvious reason is that the project associated with this work enumerated Small Scale Enterprise (SSE) activity in Egypt, so the information regarding SSE is relatively strong. Secondly, and more importantly, a growing literature has hypothesized and to a certain extent identified several benefits when the industrial production of a developing country is performed in small scale rather than large scale enterprises. Testing these hypotheses was one of the major emphases of the Rural Non-Farm Employment project in Egypt. Therefore, part of this effort is simply to compare the data collected from the MSU project with the assumed benefits of SSE production that have been discussed in the literature.

Thirdly, as Staley and Morse point out, small enterprises have relatively little specialization in management, so their needs for support and their capabilities for reacting to projects or programs are different than those of their larger competitors: they work closely with personal contacts between labor and management, thus giving them flexibility and certain advantages (but also constraints) in acting that large firms do not have; they often cannot use the major securities markets and have trouble getting credit from financial institutions because of the high transactions costs and often greater risks associated

with smal

extend de

and Morse

need to

firms di

T

evidence

evaluati

issues f

years h

importa

capital

provid

earnin

(Ander

entiti

into h

spendi

addit

inten

than

Chuta

with small loans; and their "sheer numbers" make it uneconomical to extend development assistance in ways appropriate to large firms (Staley and Morse, 1965, p.3-4.) If any interventions appear appropriate, they need to take into account these special characteristics that make small firms different from large ones.

The following section addresses the maintained hypotheses, evidence, and implications for policy that are the products of most evaluations of small firms. The second section then revisits these issues from the perspective of this research.

2.6.1 The First Visitation: Important Contributions of SSE to the Development Process

Evaluators of the development process over the last twenty-five years have increasingly come to see small scale enterprise activities as important. (Liedholm and Chuta, 1979; Staley and Morse, 1965.) First, capital is scarce while labor and small firms are plentiful. Also, they provide a substantial and often underestimated amount of employment, earnings, and industrial production when economies are less developed. (Anderson, 1982; Liedholm and Chuta, 1979.) Encouraging existing entities is often more realistic than bringing new forms of production into being, and since so many small firms exist, it may well be worth spending more time determining how to encourage their production. In addition, small firms use techniques of production that are labor intensive, so they employ a greater amount of labor per unit of capital than the more capital intensive production techniques. (Liedholm and Chuta; 1979; White, 1978; Page, 1980.)

Since much of SSE manufacturing in less developed countries is

located i

of migrat

rural and

developm

it provi

occupati

S

they do

return

competi

are bei

for sav

accumul

experts

locati

additi

earner

and t

is go

stati

dynam

located in rural areas, growth in those firms will help to slow the rates of migration to central cities. This is appropriate because it promotes rural and regional growth, which requires less infrastructural development (usage of scarce development capital), and at the same time it provides earnings to those with less opportunity for alternative occupations.

Small enterprises are often efficient users of capital, so while they do not use much capital, they use it profitably. The per-unit return on capital in these firms is often higher than for their larger competitors (Liedholm and Chuta, 1979.) From an economic view, resources are being allocated to high-value uses, and more profits are available for savings for each unit of invested, thus providing for more rapid accumulation.

A concern with equity is the second main reason that development experts have emphasized the role of small firms. The rural-based location of these firms is a positive characteristic in this case; in addition, these firms are often employers of low income, landless wage earners and women (Liedholm and Chuta; 1979.)

2.6.2 SSE Revisited: Growth Constraints, Evolution, and Production-Distribution Systems

The basic difference between the concerns of the first visitation and the second is summarized as a focus on "what it is" versus "where it is going." The first visitation exhibited a stronger emphasis on the static efficiency of SSE, while the second is more focused on the dynamics of SSE.

This revision of perspective is most easily seen in articles by

Anderson
from hou
producti
characte
firms.
than pre
nature o
overhead
wages,
sequenc
those t
(Maybe
of dyna
firms,
transit

constr
constr
Intern
includ
limits
exter
the f
input
econo
He de
secto
the a

Anderson (1982) and Schmitz(1982.) In Anderson's article, the movement from household production to the small factory, and then to large scale production, is the center of the discussion. He focuses on the characteristics of small firms that cause them to exist before large firms. He notes that advantages of location seem to play a larger role than previously expected. Also, because of the erratic and uncertain nature of demand at the early stages of development, small firms with low overhead, an easier ability to lay off unneeded workers, and with lower wages, are better able to handle the vagaries of demand. Third, the sequences of products demanded changes with increases of income, and those that are demanded first are products with low scale economies. (Maybe Say's Law is at work after all!) He furthermore asks another set of dynamic questions. Where do large firms come from? If not from small firms, then from where? This is a question of how the second part of the transition takes place, when firms go from small to large.

Hubert Schmitz explicitly asks about the sources of growth constraints to small firms (Schmitz, 1982.) He divides the types of constraints into two broad categories: external and internal constraints. Internal constraints consist primarily of managerial deficiencies that include a lack of accounting skills, poor investment analysis, and the limits and strengths of family control of a small enterprise. The external constraints are those that have to do with the relationships of the firm with a variety of other actors in the system -- competitors, input suppliers, and government. Schmitz asks to what extent do economic, political, or social factors limit the growth of small firms. He decided a greater focus was necessary on analyzing the "branch" of the sector in which the small firm operated in order to understand which of the array of constraints was operating for a particular set of small

firms. T

approach

I

interest

SSE deve

of diffe

over tim

with th

questio

the cen

Likewis

been de

nature

role

dynam

to da

dynam

secti

in t

the

of t

firms. The branch analysis he recommends is almost exactly the subsector approach which was presented earlier.

In revisiting SSE literature to assess dynamic conditions, the interest is rightly changed to one of how, why, and under what conditions SSE develop. In addition to an inherent interest in dynamics, the impact of different policy choices can be seen as having a cumulative impact over time and should be analyzed dynamically.

This revision of focus, however, does have significant continuity with the earlier work. For instance, some of the earlier analyses and questions have considered the nature of savings and accumulation to be at the center of the issue since they affect growth and development. Likewise, income growth and its impact on the demand for a product has been dealt with in a number of studies that are essentially static in nature, but which clearly have an impact on where the industry is headed.

2.6.3 The Advantages of the Subsector Approach in Small Enterprise Research

The subsector approach offers three advantages for studying the role of small enterprises in the development process: its view of dynamics, its insights into policy interventions, and its use as a guide to data collection and analysis. The first of these advantages, the dynamics, was discussed in the earlier section regarding evolution. This section addresses the second and third advantages.

The second area where the subsector approach offers advantages is in the analysis of policy interventions. The descriptive apparatus of the subsector map permits the identification of actors who are in control of the subsector. Control is obviously a somewhat elusive concept, but

it can b
transfor
and regu
open to
approach
decisior
informat
toward
particu

assist
into pl
if they
the evo
be eva

struct
Becau
asses
const
it i
situ
smal

imp
wi
av
ma

it can be understood by examining the critical functions in the product transformations, the types of firms who make positive use of the rules and regulations in the system, and the nature of investment possibilities open to different actors in the system. The format of the subsector approach and the variables analyzed help to determine which actors make decisions that influence the rest of the subsector. With this information, policies can be better designed since they are directed toward those who can effect change. Also, the external constraints to a particular firm-group's growth can be systematically investigated.

Using the subsector approach, with its evolutionary focus, to assist in policy design is worthwhile because policies are always put into place in the context of an evolving system. The effects of policy, if they are effective at all, can be simulated as affecting the nature of the evolving system, and the likely impact on different participants can be evaluated dynamically.

A third use of the subsector approach in analyzing SSE is the structure and guidance that it can give to data collection efforts. Because the structure and behavior of many different participants are assessed, it is easier to determine whether a particular perceived constraint is in fact a constraint. Through "mirror image" interviewing, it is possible to get a more complete picture of what the actual situation is regarding SSE than if the unit of observation were only the small firms themselves.

Furthermore, it is easier to determine whether it is critically important to obtain certain data or not. Certain parts of the subsector will clearly not be as important as others, and the data collection can avoid collecting excess data about industries or firms that seem to be marginal to the major evolution or objectives of the research. Comparing

data fro

system m

This is

whenever

of firms

As an e

small t

be expe

retaili

garment

projec

subsec

"bette

based

inclu

view.

econo

price

resea

distr

prod

regi

data from different sources and reconciling it with the rest of the system may be the only way, in fact, to get a picture of the system. This is especially true in developing countries, but it is also a factor whenever channels are specified according to unique variables.

More careful comparisons can also be made because different groups of firms are specified carefully by the number of functions they perform. As an example, it is a more complicated efficiency comparison between the small tailor and the ready-made garment manufacturer than might at first be expected because the small tailor performs both garment making and retailing functions, while the ready-made producer only performs the garment making function.

2.7 The Performance Criteria and Development Implications

Understanding the dynamics and evolution of the subsector allows projects and policies to be intitiated to enhance the performance of the subsector. To choose projects and policies that move the system in a "better" direction requires an idea of "better." In this research, it is based on the usual performance dimensions found in economics, which include employment of resources, equity, efficiency and progressiveness.

Efficiency is the basic measure of performance in the economist's view. Many meanings of efficiency exist, including both technical and economic efficiency. Economic efficiency also varies depending on how prices are adjusted to reflect economic scarcity values. In this research the term is restricted to mean "providing production and distribution at low cost, given the technologies and factors of production and distribution that are the cheapest under the current price regimes and income distribution within the society." Demand-side

assessme

efficien

to see h

cost po

differe

asked:

develop

worth s

For th

of the

and en

of job

with a

improv

to ca

progr

inclu

techn

that

ques

outc

part

envi

ider

pres

assessments are included within this measure to point out that an efficient firm must meet demand. Thus this performance measure is used to see how the subsector is providing supply to meet demand at the lowest cost possible.

Employment and equity performance are evaluated relative to the different channels in the subsector. Questions such as the following are asked: Do the poorest people in the society have to bear the brunt of development? To what degree? Are marginal improvements in productivity worth substantial negative equity impacts? When do they become worth it? For the employment performance measure, it is also important to be aware of the political and social consequences of who has jobs and the training and entrepreneurship externalities that are involved with certain kinds of jobs.

The final performance measure is progressiveness. It has to do with adapting technology that reduces the cost of products and that improves variety or quality. Is the industry or channel moving forward to capture new processes and products? There is more to being progressive than simply technology. In addition, progressiveness includes developing appropriate institutions to accomodate changes in technology in a timely fashion and effectively coordinating activity so that the other performance measures are obtained.

These performance measures can be aggregated in the form of two questions that synthesize the measures succinctly: "Is the mix of outcomes .... as consistent as possible with the preferences of the participants within the constraints of the physical [and social] environment? How effective are the market and political processes in identifying preferences and how responsive is the system to those preferences?" (Shaffer, 1980, p. 2-3; bracketed words added.)

the tex

approac

environ

to seve

mechani

develo

possib

subsec

The is

chapte

evolut

interv

2.8 Summary

This chapter has presented the methodology to be used in analyzing the textile subsector in Egypt. The basic approach used is the subsector approach, which defines the participants, functions, linkages and environment of the subsector. These components are analyzed with respect to several microeconomic measures and the nature of their coordinating mechanisms. The methodology used to address each of these issues is developed in the chapter. With these sets of analyses in hand, it is possible to analyze two major developmental issues: the evolution of the subsector and the role and potential of small firms in the subsector. The issues of importance for these two issues are also discussed in this chapter. Finally, a set of performance measures to use to judge the evolution of the subsector and alternative policy and project interventions is presented.

severa

first

textil

sectio

linkag

differ

outli

3

impo

cont

ind

emp

ad

ha

i

c

I

CHAPTER 3

A PICTURE OF THE TEXTILE SUBSECTOR

3.1 Introduction

In this chapter a picture of the subsector is developed using several perspectives. The place of the subsector in the wider economy is first briefly sketched and then a series of sections introduces the textile subsector using the subsector approach from Chapter 2. These sections include discussions of the participants, functions, and linkages. The employment, volume handled, and value added in the different firm-groups in the subsector are then given. The final section outlines the main features of the traditional and modern systems.

3.2 The Importance of Cotton and Textiles in the Egyptian Economy

Cotton and the associated processing industries are of central importance to the Egyptian economy, in terms of both industrial contribution and also exports. The spinning, weaving, and garment-making industries are the largest industries in Egypt in terms of output and employment (World Bank, 1983, p. 298.) Table 3.1 gives the gross value added in industry from 1969 to 1978, and shows that spinning and weaving have the largest value added of any industry group. The garment-making industry is roughly tied for third with chemicals, and is probably above chemicals if the value added of the tailors is included. Thirty-one percent of all industrial value added was in ginning and pressing cotton, spinning yarn and weaving cloth, and making garments.

TABLE 3.1

GROSS VALUE ADDED IN MANUFACTURING BY ACTIVITY, 1969-70 TO 1978

(millions of Egyptian pounds at current factor cost)

Activity	1969-70	1970-71	1971-72	1973	1974	1975	1978
Food industries	104.5	110.7	115.4	122.3	130.5	140.0	182.1
Beverages	4.9	5.7	6.6	7.1	9.6	12.0	21.4
Tobacco	14.2	15.8	17.8	20.2	23.8	27.6	37.2
Ginning and pressing	6.2	6.5	8.5	8.9	9.2	8.0	10.1
Spinning and weaving	114.7	129.7	133.1	123.6	137.5	160.0	283.8
Clothing and wearing apparel	22.9	28.3	29.9	44.8	55.4	50.7	131.0
Wood	15.8	17.4	17.5	17.0	18.6	18.7	44.4
Paper	9.8	11.4	12.4	13.2	17.5	22.0	21.9
Printing, publishing	14.5	15.0	15.5	16.5	17.5	18.0	21.7
Leather	4.9	5.4	5.8	8.3	10.5	9.8	9.5
Rubber	5.4	6.3	5.8	5.7	7.0	9.2	10.7
Chemicals	54.9	59.7	64.1	58.1	73.9	96.3	131.5
Petroleum products	9.8	12.2	13.1	21.5	n.a.	48.1	90.3
Coal products	1.4	1.9	2.1	2.1	4.7	7.4	10.7
Nonmetallic	23.5	25.8	29.2	28.1	31.4	40.1	47.7
Basic metals	23.9	25.9	29.9	34.2	41.3	52.2	100.6
Metallic products	16.6	17.5	18.9	19.0	21.5	28.0	39.4
Nonelectrical machinery	6.4	8.8	8.2	7.8	8.1	10.1	12.9
Electrical machinery	16.9	19.0	19.1	19.2	25.1	33.2	57.4
Transport equipment	14.9	18.9	20.7	23.2	26.2	32.3	59.9
Miscellaneous	30.4	31.3	32.9	36.7	51.9	56.0	61.3
Total	516.5	573.2	606.5	637.5	721.2	879.6	1,383.5

n.a. Not available.
Source: Ministry of Planning.

T

in both

LE 283.8

131.7 m

matchin

exports

which g

cloth.

produce

product

total

19.8 p

export

clothi

percen

valued

export

compr

230-2

expor

the o

and

There was a dramatic change in the value added from 1975 to 1978 in both spinning and weaving, from 160.8 million Egyptian Pounds (LE) to LE 283.8 million, and in clothing and wearing apparel, from LE 50.7 to LE 131.7 million. Only petroleum products and basic metals come close to matching the growth rates in the textile industries.

Historically, cotton and cotton products have been the mainstay of exports in Egypt. The percentage of total production in the subsector which goes to exports is high, especially for raw cotton, yarn, and cloth. As recently as the early 1970s, more than half of the raw cotton produced has been exported. Exports dropped to a low of 24.2 percent of production in 1976, but have since rebounded to about 50 percent of the total crop (National Bank of Egypt, 1985, p. 338.) Furthermore, in 1979, 19.8 percent of the yarn and 8.9 percent of the cloth produced was exported. (See Equation 3 and Table A2.4, Appendix 2.) The exports of clothing have been negligible, at 1,204 Metric Tons (MT.)

In 1982 exports of LE 340 million of raw cotton represented 69 percent of total raw material exports excluding petroleum; cotton yarn, valued at LE 86.6 million, was 51 percent of semi-finished commodity exports; and the LE 30.2 million of cotton cloth that was exported comprised 21 percent of total finished goods exports (NBE/EB, 1983, p. 230-233.) Raw cotton exports were only 15 percent of total raw materials exports if petroleum products are included, indicating the importance of the oil industry.

3.3 Participants and Functions in the Subsector

The subsector map is used in this section to show the participants and their linkages as the raw product is transformed into a garment in

Functi

CONSUMS

CLOTHIN
RETAILI

GARMEI
MAKIN

CLOTH
RETAIL

CLOT
WHOL

CL
WE

R

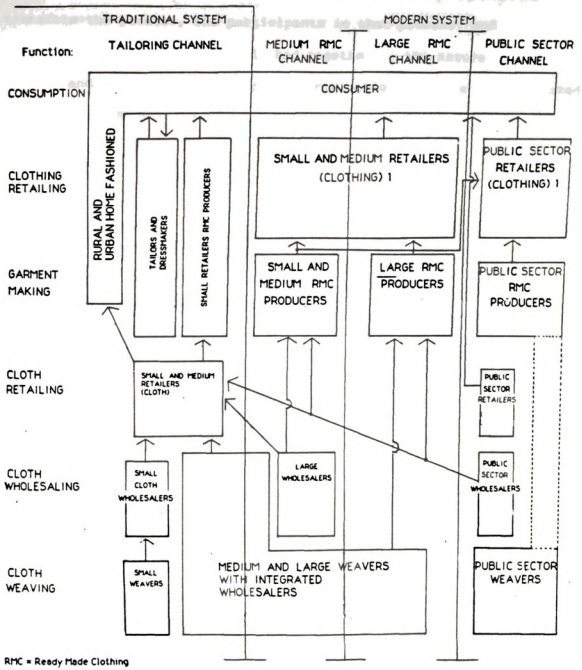

Figure 3.1

The Textile Subsector in Egypt, 1979

the han

transfo

that th

marketi

on the

side o

garmen

they a

in a

befor

diffe

secto

show

inclu

it is

some

Tran

sinc

tran

weav

proc

this

the hands of the final consumer. The major functions required to transform the product, the participants in that process, and the ways that the different stages are linked together -- the nature of the markets and contracts that coordinate the activity -- are all indicated on the map in Figure 3.1.

3.3.1 Participants in the Subsector

The five major functions of interest are shown along the left hand side of the map: weaving, cloth wholesaling, cloth retailing, garment-making, and clothing retailing. These are usually undertaken as they are listed on the map, but some of the distribution steps are done in a different sequence in different channels (See Section 3.3.2.)

Two functions are not shown in the map -- spinning, which comes before weaving, and printing or dyeing cloth or yarn, which occurs at different points in the subsector. Spinning is totally within the public sector and serves all channels. Since the main intent of the map is to show the vertical relationships and their variety, spinning is not included here. The printing and dyeing function is also left out because it is small in terms of employment and value added. While important for some issues, it does not affect the main concerns in this research. Transportation is left out as well because it only adds a minor cost since distances are short and the products are small and easily transported. Two types of producers are also left out of this map -- weavers who use hand looms, and itinerant retailers. They are marginal producers in the traditional system, and are not of great importance at this time.

Four alternative pathways or channels are shown through which the

raw pro

distinc

firms i

retaile

channe

the wh

ready-

for th

charac

channe

of the

channe

chann

weave

as to

sizes

chann

(sho

isol

part

are

cha

onl

raw product, yarn, is transformed into finished goods. One channel is distinct because it utilizes tailors and dressmakers and the smallest firms in other functions. With one variation, in which the small retailer/garment maker is used instead of the tailor or dressmaker, this channel makes up the traditional system, which centers on the tailor and the wholesaler. The next three channels all utilize different sizes of ready-made clothing (RMC) firms and weavers, and have a less vital role for the wholesaler. Together they comprise the modern system. (The characteristics of each system are discussed in Section 3.6.) The fourth channel includes the public sector companies which are separate because of their size and because of their ownership by the government.

Many firm-groups in the subsector in fact operate in several channels, which is denoted by having the boxes overlap different channels. The most important of these groups are the medium-sized weavers, who provide cloth to firm-groups that sell piece goods as well as to RMC firms; the large wholesalers, who sell in both systems; and all sizes of clothing retailers, who sell products from any of the three channels that use RMC firms.

3.3.2 Sequences of Functions in the Subsector

In this section the alternative pathways through the subsector (shown by the arrows linking different firm-groups in Figure 3.1) are isolated to show that different channels use different sequences of participants and transactions in the raw product transformation. There are three basic sequences of performing the functions among the four channels, which are outlined in Table 3.2. The Table includes a function only when it is done by a separate entity (with the exception of

tailor

perfor

and wi

that

the

inc

fac

are

of

whi

deg

se

tailoring being noted.) However, functions such as wholesaling are still performed in the sequence using larger firms, but with fewer resources and without a separate organization being involved.

TABLE 3.2

Alternative Sequences of Production and Distribution in the Textile Subsector

Step #	Tailoring Sequence	Small RMC Sequence	Large RMC Sequence
4	Tailor*	Retailing (Clothing)	
3	Retailing (Cloth)	Garment Manufacture	Retailing (Clothing)
2	Wholesaling	Wholesaling	Garment Manufacture
1	Weaving	Weaving	Weaving

*Tailoring and dressmaking include two functions, garment making and retailing of clothing.

Source: Compiled by the Author

The three sequences include one that utilizes the tailor, and two that use ready-made garment firms. The latter two are differentiated by the size of the firms involved in the sequence. The two sequences that include smaller firms have more steps, generally in distribution. In fact, since tailors also perform a retailing function for clothing, there are five steps in that channel, including two retailing functions. Both of the sequences using the smaller garment makers require a wholesaler, while the sequence using larger firms does not. This last sequence describes both the large private sector channel as well as the public sector channel. (The variation in the functions performed has to do with

distrib

fixed s

differ

featur

unless

access

finish

firms

coord

spinn

thre

twis

segr

fibe

larg

twis

Als

cot

and

and

pp.

distribution and not production. The production steps must be done in a fixed sequence, but the distribution steps can vary to accomodate the different characteristics of the production units.)

The variation in these sequences have a number of important features. First, when there are more entities handling the product, unless there are offsetting economies of size or specialization, or access to cheaper resources, the costs of reaching the consumer with a finished product will be higher. Secondly, the sequence determines which firms are in contact with each other, and this has implications for the coordination of the subsector.

3.3.3 An Overview of the Functions and Participants in the Textile Subsector

3.3.3.1. The Spinning Industry. The basic function of the spinning industry is to convert various types of fibers into yarn and thread by straightening the fibers into parallel lengths and then twisting them together. Other functions done in a spinning firm include segregating fibers of different lengths or composition, and cleaning the fibers of debris. Spinning is a capital intensive operation involving a large number of interrelated steps.

The quality of the yarn produced is dependent on the number of twists, their consistency and the chemical composition of the yarn. Also, the yarn quality and cost is in part dependent on the length of cotton fiber that is spun. The specialty of the Egyptian farmer is long and extra long staple cotton, which is especially useful for fine fabrics and finishing threads, not for coarse, loosely spun fabrics (Ikram, 1980, pp. 235-236.)

that i

firms,

firms

the to

yarn

funct

famil

fabri

funct

wool-

moist

qual

the

prin

from

whic

stil

quar

mec

to

tha

sop

spe

The

The public sector firms spin all cotton, and most flax and wool that is not exported. The industry is comprised of relatively few large firms, both in terms of employment and capitalization, as twenty-one firms employ 103,000 workers. These firms processed about 60 percent of the total cotton production in 1979 into yarn.

3.3.3.2 The Weaving Industry. The weaving industry takes the spun yarn and weaves it into cloth. The two basic variations in the weaving function are between knitted and woven fabrics. The former has the familiar stretch quality of knit underwear or sweaters, and the woven fabric lacks it. Many of the qualities of a particular fabric are a function of the composition of the yarn in it. For example, a wool-cotton blend has a different feel, susceptibility to wrinkling, and moisture absorption than does an all-cotton or all-polyester fabric. The quality of the cloth and its cost are highly dependent on the quality of the yarn used, since that quality will effect the appearance of the printing or dyeing, and the cost of cloth by work stoppages resulting from yarn breaking on the looms.

The major piece of technology in the weaving process is the loom, which has existed for centuries as the hand loom. Some of these looms still exist in Egypt, but are not very important in terms of the total quantity of cloth woven in the subsector. Most of the looms are mechanical looms but of a fairly low-cost and simple technology relative to the existing weaving technology. There is now a wide variety of looms that vary by the amount of labor required, the speed of the loom, and the sophistication of the control devices used on the machine.

Weaving is done by nineteen firms in the public sector, with two specialized in knitting, and about 1,300 firms in the private sector. The public sector firms are much larger than those in the private sector,

and are

overlap

appear

There a

113,00

about

The pr

indust

p. A-5

spun y

essen

large

diffe

secto

secto

perc

A2.4

is d

whic

They

or

tim

for

pri

emp

and are often integrated spinning and weaving firms. While there is some overlap between the private sector knitting and weaving firms, they appear to be mainly small and distinct firms of about equal numbers. There are about 73,000 employees in the private sector in this stage, and 113,000 in the public sector. Historically, the public sector produced about 65 percent of the output versus 35 percent for the private sector. The private sector however has 40 percent of the employment in the industry versus 60 percent in the public sector (Arthur D. Little, 1982, p. A-5.) The weaving industry as a whole processed 83 percent of the spun yarn output of the spinning industry in 1979.

3.3.3.3 The Wholesaling Industry. These industries perform essentially an inventory management function for the system by holding large amounts of cloth for delivery to retailers. There are three different firm-groups in this industry. The first includes two public sector wholesaling firms, which handle all cloth going from the public sector weavers to private retailers and garment makers, amounting to 37.3 percent of all cloth woven in the public sector (See Appendix 2, Table A2.4.) The public sector wholesalers also insure that the rationed cloth is distributed and so control a large proportion of the inexpensive cloth which dominates the market in Egypt.

In the second firm-group are 540 small private sector wholesalers. They generally sell cloth in forty meter rolls to smaller garment makers or retailers, who only need a limited quantity of any one fabric at a time. They generally buy from small weavers, or in fixed bundles of forty meter rolls from the public sector weavers.

The last wholesaling firm-group shown in Figure 3.1 is the large private wholesaler. There are about ten firms and three-hundred employees in this group, but they are more important than those measures

would

public

have t

is ret

map ha

clothi

garmen

done

The m

or we

while

purch

with

emplo

The

1,05

the

priv

proc

proc

spec

fro

org

ret

would indicate. While they do not have the size and or importance of the public sector firms, they are more flexible, may be more progressive, and have the ability to influence whether cloth goes to the RMC industry or is retailed as cloth.

3.3.3.4 The Ready-Made Clothing (RMC) Industry. The subsector map has separated the tailor and dressmaking stage from the ready-made clothing function, while in fact they produce nearly the same product, garments. This is done to highlight the different place that the work is done in the subsector, and the groups that sell and buy from each other. The main difference is that the RMC firms purchase cloth from wholesalers or weavers, and produce for an inventory held by clothing retailers, while the tailor converts cloth into garments after the cloth has been purchased by the final consumer.

The ready-made garment producers are divided into a public sector with a relatively small number of large firms -- ten firms with 10,500 employees, and a private sector with 1,500 firms and 26,000 employees. The average firm size is obviously quite different between each group -- 1,050 workers per firm in the public sector, and 17 workers per firm in the private sector.

There are three different types of production organization in the private sector: a whole garment method, batch production, and line production. They differ mainly by the degree of worker specialization in producing a particular part of the garment, and the associated specialization of the machinery used. There is in essence a continuum from one worker tailoring the entire garment to a highly structured organization including up to fifty work stations.

3.3.3.5 The Retailing Industry. In most public and private sector retailing establishments, RMC products and fabric are sold together. All

textile

final c

were so

transac

garment

ready-

branch

privat

market

retail

in url

than

emplo

only

are f

urban

purch

reta

to t

vill

almo

some

est

so

are

textile products go through retailers, with more output sold as cloth to final consumers than as ready-made garments -- 118 thousand metric tons were sold as fabric, representing 67 percent of the tonnage of retailing transactions in 1979, while only 58 thousand metric tons of ready-made garment sales were made, which were evenly split between knitted ready-made clothing (KRMC), and woven ready-made clothing (WRMC.)

Retailing is done by six public sector firms with four hundred branches, and about 17,100 private retailers. Nearly 9,000 of the private firms are itinerant retailers who carry textile goods to weekly markets or rural or urban areas that are not easily within reach of retail outlets. The remaining 8,100 fixed-location stores are almost all in urban areas. Despite the fact that there are more itinerant firms than fixed-location firms, the latter are far more important in terms of employment and volume handled. The itinerant retailers generally can only carry enough to fill a cart or a small space in a central market.

Because of the density of population, even most of the villages are fairly near urban areas, so villagers can go to retail outlets in urban areas. Because of the seasonal and intermittent nature of the purchase of clothing, this structure imposes relatively little hardship.

3.3.3.6 Tailoring and Dressmaking. When cloth is purchased from retailers as fabric, the consumer has the option to tailor it herself, or to take it to tailors or dressmakers, who are widely dispersed in all villages and urban areas. Because of the traditional Muslim culture, almost all dressmakers are female and tailors male, with the exception of some male dressmakers who do fashion work in urban areas. There are estimated to be about 180,000 firms and 317,000 persons employed, which so these firms are the largest employers in the subsector. Many of them are part-time workers, but since they work on average more than 35 hours

per we

the ga
that m
by def
who sp

it is
on th
Each
which
38 pe
tailo

tailo
perce
propo
There
tail

func
are
reta
inte

per week, fewer are really part-time than might be expected.

The production process is well-known. The person who will wear the garment is measured, the garment is then cut from cloth according to that measurement, and then the parts are finally sewn together. Almost by definition, this work is done by one person, or at most a few workers who specialize to some extent.

Tailoring is entirely a private sector activity, and, of course, it is an age-old institution. Many tailors and dressmakers are dependent on the rationed-cloth distribution, called the Popular Supply Program. Each family is entitled to an annual allottment of subsidized cloth, which is purchased as piece goods. This amount represents approximately 38 percent of all cloth distributed and hence keeps up the demand for the tailors and dressmakers.

One of the most striking findings of this research is that the tailors and dressmakers, as extensive as they are, only process 37 percent of the piece goods sold in the system. (This is even after a proportion of piece goods going to non-garment uses is excluded.) Therefore, there are many people who may be too poor to afford the tailoring services and do the tailoring themselves.

3.4 Linkages in the Subsector.

The textile subsector in Egypt contains many participants and many functions that must be linked together. The majority of these linkages are markets, and all products go through markets at least out of the retailing stage. Other forms of linkages discussed below are vertical integration and administrative control.

anothe

diffe

affec

marke

these

firms

input

publi

1981

popu

38 p

Also

cont

cons

in a

maxi

pri

mar

the

the

one

mar

lar

3.4.1 Markets in the Subsector

The vast majority of transactions between one function and another are done through markets. However, these markets have quite different characteristics, primarily in the extent of regulation that affects them and in the need for long-term, stable relationships in some markets. The prices and competitiveness of the markets are affected by these variations between markets.

Yarn is allocated on a per loom basis from the public spinning firms to private sector weavers. Even with a high willingness to pay for inputs there is no guarantee that private firms will get them since the public sector gets first use of the yarn (Institute of National Planning, 1981, pp. 172-189.) Secondly, the fixed-price, quantity-allocated popular supply cloth is a major product in the cloth market, since about 38 percent of the cloth sold comes from the government subsidy program. Also, the allowed mark ups for wholesalers and retailers of cloth are controlled. Finally, the decisions of the public sector firms are constrained by regulations and an extensive administrative apparatus, and in addition these firms have mandates to pursue other goals besides maximizing profits.

Markets also differ in how close they approximate the price-auction model of economic theory. Without the regulation affecting mark ups, the small wholesalers might exist in a market that is close to the price auction market, since many firms are located near each other, the product can be inspected, and there are many potential purchasers in one location, all looking for the best price. On the other hand, the markets between the large wholesalers and large weavers, or between the large RMC producers and large weavers, are quite different. The

purch

numbe

exist

trans

with

long-

mark

tran

mark

diff

clot

mark

that

of

the

can

mad

con

in

ma

ar

fu

purchasers need a wide variety and large quantity, and must negotiate a number of months in advance. Therefore, a preference for stability exists, and the need to trust buyers and sellers is great. The other transactions are probably intermediate forms of these two situations, with some tending towards spot markets and others tending towards long-term contracts.

The third source of variety between markets is in the types of markets themselves, which are defined by the central features of their transactions (Shaffer, 1985, pp. 9-12.) Posted price markets, auction markets, and direct negotiation or private treaty markets all have different types of performance implications. The retail markets for clothing are all posted price markets, as are some of the wholesale markets. The rest of the system is generally made up of transactions that are private treaty, with only a few that resemble the auction market of economic theory. An interesting example of a private treaty market is the transaction between the tailor and the consumer, through which prices can be attached to the separate qualities in the garment, and allowances made in prices and terms of trade for special circumstances of the consumer.

3.4.2 Vertical Integration and Administrative Coordination in the Subsector.

Four areas are indicated on the map as having significant vertical integration. The tailors and dressmakers are retailers as well garment makers since they deal directly with final consumers. Accordingly, they are shown as being integrated with retailing and garment making functions. The small retailer who is also a producer of ready-made

garme

were

activ

weave

of th

ready

non-

show

exte

publ

othe

sect

whol

oper

adm

to

men

dif

gua

opp

ar

in

an

pa

th

garments is shown next to the tailor and dressmaker. Many of these firms were urban tailors who saw the benefits of retailing as a separate activity. There are also a small number of integrated wholesalers and weavers, who, although small in terms of numbers, are important in terms of their current and potential power and influence.

The public sector is shown as completely integrated in weaving and ready-made clothing. This is not strictly true because there are several non-integrated firms in each stage, but the presentation is simplified to show that the sector is highly integrated, and also to indicate the extent of administrative coordination by government ministeries in the public sector (See Chapter 6.) The integration of spinning firms with other functions is not shown on the map, but many firms in the public sector do have spinning, weaving, and RMC production facilities. The wholesalers and retailers are not integrated with the manufacturing operations nor with each other, but they are under the same administrative net.

In almost every stage some firms vertically integrate with others to create a unique source of inputs. The vertically integrated stages mentioned above seem to be systematically arising from a number of different pressures which will be examined later, including the need to guarantee quality of output and gain control over inputs. Also, the best opportunities to expand and to participate in a higher return business are often only possible through vertical integration.

The main questions arising from the study of markets and integration is whether vertical integration or long-term contracts make any difference. Do they offer a competitive advantage to the firms participating, or change the cost structure, or improve coordination through the system? Furthermore, do they affect the evolution of the

subsec

analyz

the r

volum

firm-

table

no se

knowr

numbe

3.3,

very

sixt

larg

indi

sub

inc

fig

usu

subsector, and the location of control in it? These questions are analyzed in Chapters 5 and 7.

3.5. Further Perspectives on the Subsector.

Three categories are examined in the following subsections to show the relative importance of different firm-groups: the employment, the volume of raw product, and the value added for each of the different firm-groups. The values for each of the variables are presented in tables that correspond to the firm-groups in Figure 3.1, except there is no separation of firms based on vertical integration. The values are not known with enough certainty to make that separation except by using the number of firms and employment, which would not add any new information.

3.5.1 Employment in the Subsector

The main sources of employment in the subsector, shown in Table 3.3, are in the large public sector spinning and weaving firms, and the very small tailoring and dressmaking firms. Remarkably, there are about sixty thousand more employees in the small tailoring firms than in the large public sector spinning and weaving firms. The retailing and RMC industries, with 39,000 and 35,000 employees respectively, are substantial if not massive sources of employment. Wholesaling is an inconsequential source of employment.

The number of firms is found in parentheses under the employment figure. Small firms generally have less than ten employees (and are usually in the tailoring channel); medium firms have between 10 and 100

FIRM-C

Dressm

-Rur

-Urb

Tailo

-Ru

-Ur

Retai

Read

Clot

Whol

Weat

Spi

CHAN

---

[1]The

Ch

[2]Th

[3]Th

Sou

TABLE 3.3

Total Employment and Number of Firms in the Textile Subsector
By Channel and Firm-group, Egypt, 1979

FIRM-GROUP:	CHANNEL[1] Tailoring	Medium RMC	Large RMC	Public Sector	Firm-Group Total
Dressmakers:					
-Rural	86,672 (58,869)[2]				86,672 (58,869)
-Urban	72,630 (34,182)				72,360 (34,182)
Tailors:					
-Rural	53,262 (28,791)				53,262 (28,791)
-Urban	104,375 (41,417)				104,375 (41,418)
Retailing	32,400 (16,800)[3]	2,600 (325)	x	4,000 (6)	39,000 (17,131)
Ready-made Clothing	3,666 (1,222)	9,375 (225)	11,250 (75)	10,500 (10)	34,791 (1532)
Wholesaling	1,080 (540)	x	300 (10)	300 (2)	1,680 (552)
Weaving	780 (130)	39,780 (510)	3,750 (10)	113,000 (19)	157,310 (669)
Spinning	x	x	x	103,000 (21)	103,000 (21)
CHANNEL EMP.:	354,865	51,755	15,300	230,800	652,450

[1]The "Tailoring" Channel is in the Traditional System, and the other Channels comprise the Modern System.

[2]The values in parentheses refer to the number of firms.

[3]This figure contains 9,000 itinerant retailers.

Source: Compiled by the Author from Appendix 1.

employees, and the largest firms have more than 100 employees.

This categorization is not done with a precise delineation in mind, although small firms in this research are often considered artisanal in other cases. Also, both medium and small firms usually are under the upper limit of 50 or 100 employees often used to define small firms in other research (Arthur D. Little, 1982, pp. II,4-9.) The table also shows how employment is distributed throughout the public and private sectors. There are no private spinning firms and the public sector dominates weaving as well; thus one of the main employment sources lies in the public sector. The private sector provides the greatest employment for the subsector in the tailoring firms. In retailing, the small firms in the private sector are by far the major employers in that function. The large RMC firms in the private sector are the largest garment employers, employing as many workers as the medium and small firms together, and about as many as the public garment firms.

Those firm-groups that most likely contribute or lose the most employment as the subsector evolves can be identified. It will be hard for a small industry, such as wholesaling, to be a major source of employment even with substantial growth. Conversely, it will be possible for large industries like the tailors and dressmakers to gain or lose much employment depending on how the changes in the subsector affect them.

3.5.2 Estimated Volume Handled in the Subsector

The next table, Table 3.4, shows the volume of product handled by the different participants. (See Appendix 2 for the basis of these calculations.) The data in the table are in metric tons, and are net of

FIRM-

Home

Fashi

Non-

Uses

Dres

-R

-U

Tail

-F

-T

Reta

-

-

Rea

Clo

Who

Wea

Sp

--

1

Cl

2

A

3

T

4

T

5

J

S

TABLE 3.4

Total Volume in the Textile Subsector
By Channel and Firm-group, Egypt, 1979

(Metric Tons)

FIRM-GROUP:	CHANNEL[1] Tailoring	Medium RMC	Large RMC	Public Sector	Firm-Group Total
Home Fashioned	51,025				51,025
Non-Garment Uses	28,000				28,000
Dressmakers:					
-Rural	13,982				13,982
-Urban	7,349				7,349
Tailors:					
-Rural	6,905				6,905
-Urban	11,120				11,120
Retailing:[2]					
-Cloth	47,044[3]	10,963	x	60,374	118,381[5]
-Clothing	17,119[3]	3,990	x	25,471	58,378
Ready-made Clothing	2,566	7,238	8,333	6,042	24,179
Wholesaling	7,114	x	5,784	45,480	58,378
Weaving	761	44,090	4,156	121,900[4]	170,907
Spinning	x	x	x	254,359	254,359

[1]The "Tailoring" Channel is in the Traditional System, and the other Channels comprise the Modern System.

[2]All retailers are assumed to sell 71% fabric and 29% RMC products.

[3]This figure contains the volume of 9,000 itinerant retailers.

[4]This figure contains the knitted clothing output of the public sector.

[5]Includes 46,463 MT of Rationed Cloth Production.

Source: Compiled by the Author from Appendix 2 and Appendix 3.

losse

there

tonna

count

firm-

publ

sect

thes

evid

roug

publ

fas

ton

39,

the

amo

by

wh

of

pr

a

a

losses in production at each stage and also of exports. The values therefore are not additive but give the output from each stage, minus the tonnage that leaves the system at that stage. There is also double counting as the product moves up through the subsector.

The volume figures generally indicate the same distribution of firm-group size as do the employment figures. All of the yarn is spun by public sector spinning firms, and most of the cloth is woven by public sector weavers. The control over volume by the public sector through these firms and also through the retailing and wholesaling firms is quite evident in this table. The volume handled in other firm-groups is roughly in proportion to their employment, except in retailing, where the public sector is more important than their employment would indicate.

The most striking point in this table is the amount of cloth fashioned into garments in the home. In 1979, there were 118,381 metric tons (MT) sold as fabric but tailors and dressmakers only processed 39,356 MT, or 33 percent. About 28,000 MT went into non-garment uses, so the tailors and dressmakers fashioned about 44 percent of this reduced amount. Thus 51,025 MT were purchased from retailers and then fashioned by home production. Another striking point is that rural dressmakers, who are thought of as part time producers, handled nearly the same volume of cloth as urban tailors. Finally, only 34 percent of the cloth produced was sold as RMC products (including knit and woven products), so a subsector which sells mainly ready-made garments is still far away.

3.5.3 Estimated Value Added in the Subsector

The format in Table 3.5, which shows the value added, is the same as in the previous tables and the conclusions are similar. The largest

FIRM

Dres
-P
-U

Tai
-H
-L

Ret
-
-

Rea
Clo

Who

Wea

Sp
--
CH
--

1.
(

2.
-

3.

4.

S

TABLE 3.5

Total Value Added in the Textile Subsector
By Channel and Firm-group, Egypt, 1979
(LE Thous.)

FIRM-GROUP:	CHANNEL[1] Tailoring	Medium RMC	Large RMC	Public Sector	Firm-Group Total
Dressmakers:					
-Rural	16,366				16,366
-Urban	28,029				28,029
Tailors:					
-Rural	18,598				18,598
-Urban	76,829				76,829
Retailing:[2]					
-Cloth	24,330[3]	5,670	x	33,500	63,500
-Clothing	27,168[3]	6,332	x	36,500	70,000
Ready-made Clothing	5,209	17,944	24,012	8,300	55,465
Wholesaling	1,375	x	1,132	2,508	5,015
Weaving	1,055	61,510	5,799	171,700[4]	240,064
Spinning	x	x	x	124,066	124,066
CHANNEL TOTAL:	198,959	91,456	30,943	376,574	697,132

[1]The "Tailoring" Channel is in the Traditional System, and the other Channels comprise the Modern System.

[2]All retailers are assumed to sell 71% fabric and 29% RMC products.

[3]This figure contains the value added of 9,000 itinerant retailers.

[4]This figure contains the knitted clothing value added of the public sector.

Source: Compiled by the Author

firm

term

the

volu

the

gene

act

fun

mak

Sec

goe

val

wic

ad

cl

re

ma

cl

wh

o

p

t

firm-groups in terms of employment also are the largest firm-groups in terms of value added, and small firm-groups contribute small amounts to the value added in the subsector.

There are some differences in proportions when compared to the volume statistics. The tailors and dressmakers transform 45 percent of the total product that is commercially made up into garments, but generate 72 percent of the total value added produced by garment making activities. However, tailors and dressmakers also provide a retailing function, so that the comparison is not a strict comparison of the making-up function. (This comparison is made in detail in Chapter 4.) Secondly, while rural dressmakers handle 36 percent of the cloth that goes through the tailoring firms, they only capture 12 percent of the value added. Thus the market segmentation is dramatic, and it leads to widely different returns within the tailoring industry itself.

Another divergence between the volume statistics and the value added statistics comes in the retailing stages. The volume of cloth (not clothing) sold by retailers was about 72 percent of the total volume from retailers, but the value added was only 48 percent, which implies there may be incentives for firms to sell ready-made clothing rather than cloth. However, the final determination is the relative profitability, which will be discussed in Chapter 4.

3.6 The Systems in the Subsector

The previous discussions have presented a variety of perspectives on the participants, linkages, and channels in the subsector. A further partition of the subsector is also shown on the map -- into the traditional and modern systems. Each system has unique participants,

force

evolu

compe

perh

gart

cent

pro

lar

who

at

sti

or

cl

co

Eg

us

sc

a

e

forces at work, and strengths which endure under certain patterns of evolution and not under others. This section presents an overview of the composition of the two systems and the forces which are at work.

3.6.1 The Traditional and Modern Systems

The pure traditional system has small firms in all stages except perhaps wholesaling, and also uses tailors and dressmakers to finish the garments, or the garments are made in the home. The wholesaler is a central actor in the traditional system because he can help the system provide variety at minimum cost. A pure modern system, in contrast, has large firms in weaving, RMC production and retailing, and there are few wholesalers because the firms have become large enough to produce variety at low cost by directly contracting with other large firms. (There is still the possibility of wholesalers existing to service discount stores or boutiques.) The final output of the system is exclusively ready-made clothes in contrast to the piece goods that are taken to tailors by consumers in the traditional system.

The traditional system is represented by one channel in the Egyptian subsector, which utilizes the tailor as garment maker and which usually has small firms in other stages as well. The wholesaler has in some cases become a large firm because of economies of size. In addition, the weavers and retailers may have become somewhat larger but are still considered to be in the traditional system as it actually exists in Egypt.

The three channels that make up the modern system are the two private sector channels with different-sized RMC firms and the public sector channel. All are based around RMC production, except for the

large amount of cloth produced for piece goods sales by the public sector. There are relatively large firms in most stages of production, although some small retailers and RMC firms are included and some of the smaller firms still use wholesalers.

There are several other divergences from the pure traditional model in the subsector as well. First, there are large weavers who sell to wholesalers. They operate in the traditional system because their output of cloth is ultimately sold as piece goods. Another instance of the diversion from the traditional system is the small retailers, who sell both cloth and clothing and are part modern and part traditional. (Their small size means that they are more traditional than modern.) The public sector has very large firms in all stages but still uses wholesalers because their final output is mainly piece goods, which are often sold to small retailers and thus require wholesalers.

The small RMC channel is put in the modern system because of its output. However, because of the small size of the RMC producers, the wholesaler is useful in that channel to aggregate orders for cloth from small RMC producers to give to weavers. That feature gives the small RMC channel some traditional elements. Finally, the very small RMC producers are traditional because they often come from urban tailors who have moved their production out of the shop to use it for retailing, and then have begun to produce ready-made garments.

3.6.2 Providing Variety and Minimum Cost Production in the Traditional and Modern Systems.

A fundamental tension exists in the textile subsector between the need to achieve minimum cost production and to provide variety and

fashion to consumers. This tension is handled quite differently in the traditional and modern systems. In the traditional system, the wholesaler has an extremely important role in understanding what quantities and qualities of cloth are required because they can see the extent of variety required as well as anyone. Their view of the system will improve with size, but even small wholesalers have a large number of small orders from retailers and can get some perspective. They also aggregate orders from retailers into sufficient sizes to allow weavers longer production runs, thereby reducing the cost of production.

The traditional system also handles the problems of variety and uncertainty differently than the modern system. First, changes in fashion are almost by definition rare, so producers know the fashions that will be in voque the following year. (They are the same as last year's!) Also, the sequence of steps running from the cloth retailer to the consumer, and then to the tailor, permits some control over the problems of variety. The consumer's preference is voiced before a garment is made, and further, a decision has been made about the color and pattern of the garment. This production-on-demand feature of the system makes it more conservative than the modern system and it reduces risk through the nature of the relationship between the tailor and consumer.

The traditional system also minimizes costs differently from the modern system. Tailors and dressmakers are locationally dispersed, so they are able to use pockets of underutilized resources, such as women who work part-time for low wages. While the traditional system has several sources of higher costs, they are offset in the low-cost garment firms. Also, the traditional system allows the option of home-fashioning the garment so the consumer can make a decision to save money or add

personal utility by making clothes. As will be shown in Chapter 4, this can add up to significant savings.

The modern system uses large firms in most stages to create adequate variety and reduce costs. These firms, especially garment makers and weavers, can produce variety with long production runs that minimize costs and cloth waste. Costs are further reduced through the direct contact between the RMC producer and the weaver, which allows the wholesaling activity to be done with fewer resources.

Most of the firms in the modern system are able to get a sense of the market because of their size. The large retailer has a good view of the market and they transfer their knowledge back through the system, with the result that variety can be provided with less risk of missing the market. Currently however, the use of low opportunity cost resources in the traditional system results in lower cost products than in the modern system.

3.7 Summary

In this chapter, the basic overview of the subsector has been given. The importance of the subsector in relation to the industrial sector of Egypt was first mentioned. The spinning and weaving industries are the largest in Egypt and the RMC firms have the third largest value added of any industry. (This figure probably excludes the value added of tailors and dressmakers.) The many industries in the textile subsector were then examined using the subsector map to show the different producing and distributing firm-groups that operate in the subsector and how they have been aggregated into channels for this research. Also, the nature of the linkages, including the types of markets and extent of

vert

the

and

firm

sect

lar

val

sta

pri

hal

the

pr

th

dr

ch

pr

us

vertical integration, was discussed.

Four variables were then presented for each of the firm-groups in the subsector: the number of firms, the employment, the volume of output, and the value added. The most employment was found in the tailoring firms, with about 317,000 employees, followed by all firms in the public sector, with about 231,000 employees. The public sector firms are much larger than most of their private sector competitors, and the volume and value added statistics showed the importance of the public sector in most stages of production and distribution. Only in RMC production did the private sector control a majority of the volume and generate more than half of the value added. The low value added for dressmakers relative to their volume of production was also striking, indicating low costs of production.

Finally, the subsector was shown to be comprised of two systems, the traditional and modern systems. The channel with the tailors and dressmakers makes up the traditional channel and the remaining three channels are in the modern system. The two systems deal with the main problems of variety and low cost of production in very different ways, use different resoures, and have different strengths and weaknesses.

CHAPTER 4

THE ECONOMICS OF THE TEXTILE SUBSECTOR IN EGYPT

4.1 Introduction

The economics of demand and supply for textile products are discussed in this chapter. First, the demand for clothing is examined, which is the final output of the subsector. The supply of final and intermediate products is then analyzed for each industry with respect to their main economic characteristics and the role that individual industries play in the channels that make up the subsector. Thus the subsector orientation is suspended for most of the chapter as the individual industries are examined, but it will be used to summarize the various analyses performed.

4.2 The Products and Demand in the Textile Subsector

4.2.1 An Overview of the Output of the Subsector

The output of a textile subsector goes into a variety of different uses, ranging from such exotic uses as coverings for artificial hearts and arteries to such pedestrian uses as coverings for bales of cotton. The major products of interest here are those that are used as clothing, particularly the clothing fashioned by tailors and dressmakers and the competitive products produced in the RMC channels. It is useful to view the array of industry output and then decide which products are important

for the issues under consideration.

The quantities of the major products produced by the textile subsector in 1976 are shown in Table 4.1. The primary separation is into two groups -- free fabrics and popular supply fabrics. The latter group, which accounted for 32.6 percent of total cloth disappearance in 1976, is the cloth in the government's subsidy program (See Chapter 6, Section 6.4.1.2.) Two columns of percentages are given in Table 4.1, one that relates product tonnage to the entire output of the subsector, and one that compares a product line to the total clothing output. The clothing output was 110,000 metric tons, or 80 percent of the total output of the subsector. Non-garment uses of the output of the subsector were estimated to be 20 percent of output, or about 28,000 MT. This estimation was simply based on the descriptions of the categories given in the table.

The relative proportions of Western and traditional garments can also be estimated from Table 4.1. The fabric that goes into gelabeyas clearly goes to a traditional product. In addition, most of the popular supply cloth ends up as traditional clothing. Therefore, at least 60 percent of the cloth is used for the production of traditional products. If summer suits, traditional vests, and some of the pajamas for men, women, and children are considered part of the traditional product lines, then probably 70-75 percent of the cloth tonnage is used for traditional products.

It is not clear from Table 4.1 whether the products are outputs of RMC firms or tailors. The skirts and blouses, lightweight dresses, knitted underwear, and perhaps school uniforms are probably made in the RMC channels. They account for 10.8 percent of clothing, or about 12,000 MT. This was about half of the estimated RMC production for 1979 (See

TABLE 4.1

Products of the Egyptian Textile Subsector

By type of Product

Egypt, 1976

(Millions of Sq. Meters and Metric Tons)

Type of Fabric	Millions of M^2	Total Metric Tons	% of Tot. Tons	Metric Tons of Clothing	% of Clothing Tons
Free Fabrics:					
Ready Made Sheets	55	8	5.8	-	-
Shirts / Blouses	45	4	2.9	4	3.6
Lightweight Dresses	30	3	2.1	3	2.7
Women's Outerwear	60	20	14.5	20	18.2
Men's Outerwear	70	21	15.2	21	19.1
Knitted Underwear	30	3	2.2	3	2.7
School Uniforms	10	2	1.4	2	1.8
Gelebeyas	70	12	8.7	12	10.9
Bedcovers	6	1	1.0	-	-
Terry Fabrics	4	3	2.1	-	-
Upholstery Fabrics	10	3	2.1	-	-
Other Fabrics	47	8	5.8	-	-
Popular Supply Fab.	251	5	3.6	45	41.0
Army Drill	23	5	3.6	-	-
Total	711	138	100.0	110	100.0

Source: A.D. Little, 1975

Appendix 2.) The remaining tonnage would be distributed through many of the other categories.

Finally, the problem of translating the products from square meters into tons is shown in Table 4.1. This can be seen by comparing the square meters used in the left column with the tons used, shown in the next column. The weight of cloth used in different products varies from a high of 750 grams per meter for terry cloth fabrics, to only 10 grams per meter in lightweight dresses, and shirts and blouses.

4.2.2 The Products of Tailoring Industry

The issue of demand is best introduced by showing the products that are produced by tailors and dressmakers since this represents the kinds of products in which most of the fabric is used. The products produced by tailors are shown in Table 4.2, and the products of dressmakers are given in Section 4.2.3 in Table 4.3. For each product, the number of items produced by the firms in the sample is shown for both rural and urban firms.

The actual garment making may be done by tailors or by the consumers themselves. It is assumed that the products made by the tailors and dressmakers are similar to those produced at home, which together absorb about 65 percent of the total fabric produced in the system.

Tailors produce two main product lines: the traditional and the modern styles. The types of products made in each of these categories and the quantities produced are given in the following sections. The data used is taken from the MSU Phase II survey.

4.2.2.1. The Traditional Tailoring Products. The traditional

products include a generally complementary set of clothes currently produced mainly for farmers and other rural inhabitants. (There are some alternative traditions, such as the conservative Muslim clothing, which are essentially variations on the style described here.) The main garment produced is the gelebeya, a gown that usually has long sleeves and hangs to the ankles. It also usually has buttons to the middle of the chest but there are some variations depending on the type of the gelebeya.

There are three types of gelebeyas that are commonly produced by tailors in Egypt. Two variations of balladi gelebeyas are shown in Figure 4.1. (Balladi means "country.") The men in the darker clothing are wearing a wool balladi gelebeya, which is worn like a dress suit. It is a relatively high-cost garment, with handsewn hems and handsewn silk trim at the neck, arm and chest openings of the garment. A lightweight, cotton version of the balladi gelebeya is also worn, with the same neckline, wide sleeves and chest opening, but with less trim and handsewing included.

The third variety of the men's gelebeya is the gelebeya afrangi, which is most similar to the cheaper balladi gelebeya in style, but resembles a Western shirt with very long shirttails. The collar and cuffs are similar to a European dress shirt, as are the front buttons and associated trim. An example of the gelebeya afrangi is shown in Figure 4.1. It is being worn by the men on the extreme left and right.

Figures 4.1 and 4.2 show the array of complementary products that are worn with the gelebeya. A large variety of scarves and hats are usually worn, as well as a quite heterogeneous mix of sweaters, other gelebeyas, shirts, and pajamas as undergarments. Many of these

TABLE 4.2

Products of the Sampled Tailors
(By Location of Producers, Number of Pieces, and Value)

Egypt, 1982

Product	Rural Pieces (#)	Rural Value (LE)	Rural % of Value	Urban Pieces (#)	Urban Value (LE)	Urban % of Value
Gele. Balladi I	149	2010	19.1	288	2952	8.9
Gele. Balladi II	1131	2850	27.0	366	1211	3.7
Gelebeya Afrangi	1910	3725	35.3	1167	2754	8.3
Trad. Vests	2008	1647	15.6	654	785	2.4
Shirts	26	22	.2	797	1522	4.6
Pants	44	28	.3	3848	11043	33.2
Summer Suits	-	-	-	594	7942	24.0
Winter Suits	-	-	-	145	4257	12.8
Pajamas/Other	87	261	2.5	584	692	2.1
Total	-	10543	100.0	-	33158	100.0

Note: Gelebeya Balladi I refers to the expensive Gelebeya Balladi.
Gelebeya Balladi II refers to the cheaper Gelebeya Balladi.

Source: MSU Phase II Survey Data

under

chann

under

worn

strip

of o

Phas

less

indi

proc

wer

The

rur

al

wh

ar

tr

ob

a

l

c

c

s

undergarments are knit, and are produced in the public sector or RMC channels. One product, however, is produced only by tailors and is used under gelebeyas -- the traditional vest. This is a classic vest that is worn with the expensive gelebeya balladi and has a silver and black striped silk front and a white cotton back. In addition, a wide variety of other cotton vests are made to go under gelebeyas.

The traditional products produced by the sample of tailors in the Phase II survey are shown in the first four rows of Table 4.2. The three less expensive products were produced in greater quantities, perhaps indicating some price sensitivity by consumers. The gelebeya afrangi was produced in the greatest quantity followed by vests. These two products were produced almost twice as often as the inexpensive gelebeya balladi. The vest, however, is more of a complement and is a minor product.

Table 4.2 also shows the proportion of the products produced by rural and urban firms. The sampled tailors in rural areas received almost 80 percent of their gross income from the three cheaper products, while these products only represented 15 percent of gross income in urban areas. This may mean that the primary location of demand for the traditional products is in rural areas, which is consistent with casual observation.

The traditional styles may be better adapted to the lower incomes and the quite possibly lower quality tailoring in rural areas. The looser-fitting traditional styles put less stress on the seams of clothing and do not require exact meaurements, and so may allow cheaper cloth to be used and poorer tailoring to be tolerated. The traditional styles may thus represent an efficient method of providing clothing which is consistent with the capability of the weaving and tailoring industries. The lower cost of tailoring in rural areas and

Figure 4.1: Traditional Tailoring Products: Gelebeas

Figure 4.2: Traditional Tailoring Products: Complementary Goods
Source: Photographed by the Author.

the abili

tradition

consumers

Ta

produced

that is

ability

populati

keep ful

exposure

these pr

4

products

clothing

there a

dress s

to dres

for exa

are als

or synt

in Egy

are mu

short

pants

the f

busin

the ability to use cheaper but poorer quality popular supply cloth in traditional products also helps make clothing more affordable for rural consumers.

Table 4.2 also shows that the more expensive gelebeya balladi is produced predominantly in urban areas. Since the consumer provides cloth that is relatively expensive for this garment, he must trust the tailor's ability to handle expensive cloth. Also, it may take exposure to a large population for a given tailor to gain a widespread enough reputation to keep fully occupied. To get both the reputation for quality and the exposure to a large enough population may require an urban location for these products, even though the consumers are perhaps mainly rural.

4.2.2.2 The Modern Tailoring Products. The modern garment products consist of clothes that are essentially identical to Western clothing and clothes that are more unique to Egypt. In the former group, there are shirts, pants, and winter suits. The shirts are similar to dress shirts worn in the West, and the pants are usually closer in style to dress slacks than to blue jeans or corduroy pants. (See Figure 4.3 for examples of the shirts and pants worn.) The tailored winter suits are also similar in style to Western suits and are made from heavy wool or synthetic cloth.

Summer suits and pajamas are two tailored products that are used in Egypt and are not found much outside that country. The summer suits are much like a safari suit, with a front-buttoned top which is either short or long sleeved and has four front pockets. A matching pair of pants similar to dress slacks is also part of the suit. These suits are the favored summer wear for government officals, professors and businessmen, and are distinctly Egyptian.

in the
boy on
for out
pajamas
the wir

in Tab
tailor
This f
produc
35 for

Figure 4.3: Modern Tailoring Products
Source: Photographed by the Author

Pajamas are unique to Egypt in the way that they are used if not in the style. Examples of pajamas are shown in Figure 4.2, in which the boy on the far left and the boy with his face covered are wearing pajamas for outside use. This is typical -- many children and grown-ups wear pajamas as casual street clothes, both during the winter and summer. In the winter, sweaters and long underwear are worn underneath them.

The purchases of each product from tailors in the sample are shown in Table 4.2. Pants are the most important product produced by urban tailors, and they far exceed the production of winter and summer suits. This fact appears to reflect the relative costs of the different products, which are about LE 3 for pants, LE 15 for summer suits, and LE 35 for winter suits, including only the cost of tailoring.

In contrast, the number of shirts and pajamas produced seems to be

less th

two shi

the num

the dur

product

of some

almost

signif

betwee

modern

rural a

the tw

of com

not ru

apropo

presen

of the

outfit

men's

tradit

usuall

conse

less than expected from the relative prices. It would seem that one or two shirts should be purchased along with each pair of pants. Similarly, the number of pajamas produced seems to be fairly small given the price, the durability of the product and its wide utility. These may be the product lines where RMC producers have made relatively larger in-roads.

The rural and urban dispersion of the modern product lines is also of some interest. As Table 4.2 shows, modern products are produced almost entirely in urban areas, with only pajamas being produced significantly in rural areas. Thus, there is a clear correllation between the product lines and the location of production, with most modern goods produced in urban areas and traditional goods produced in rural areas. This points to a substantial difference in the consumers of the two products. It also points to a difference in the initial points of competition by the RMC industry with the tailors, which are in urban, not rural, areas.

4.2.3 The Products of the Dressmaking Industry

The disaggregation into modern and traditional product lines is apropos for the dressmaking industry as well. Therefore, this presentation is made in the same two sections contained in the discussion of the tailoring industry.

4.2.3.1. The Traditional Dressmaking Products. The traditional outfit for rural women is usually produced by dressmakers. Like the men's outfits, they include an outergarment, the gelebeya balladi or a traditional dress, and a variety of undergarments. The gelebeya is usually the top layer with the other garments worn underneath. The more conservative and older women wear completely black outergarments. These

products

traditio

balladi.

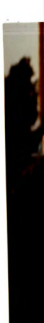

Figure 4

balla

4.3.)

rough

case,

more

fast

not m

may b

products are shown in Figure 4.4. The woman on the left is in a traditional dress, and the one on the right is wearing a gelebeya balladi.

Figure 4.4: Traditional Dressmaking Products: Gelebeas and Dresses

Source: Photographed by the Author

The garment most often produced by dressmakers is the gelebeya balladi, followed by underwear and behind that, by dresses (See Table 4.3.) One would expect that dresses and underwear would be produced in rough proportion to the gelebeyas. Yet this is not anywhere near the case, so dresses are either demanded less often than gelebeyas or are more often purchased as RMC products. Also, underwear should wear out as fast as gelebeyas and should therefore be purchased almost as often, if not more. This is not the case, which implies that underwear for females may be currently purchased as ready-made clothing.

TABLE 4.3

Products of the Sampled Dressmakers
(By Number of Pieces and Value)

Egypt, 1982

Product	Rural Pieces (#)	Rural Value (LE)	Rural % of Value	Urban Pieces (#)	Urban Value (LE)	Urban % of Value
Gelebeya Balladi	4754	4326	42.2	816	530	11.2
Dresses	1495	2512	24.5	348	1625	34.4
Blouses	134	1355	13.2	341	1125	23.8
Skirts	173	227	2.2	241	499	10.6
Underwear	2759	1048	10.2	538	630	13.3
School Clothes	418	272	2.7	145	96	2.0
Coats/Suits	29	61	.5	20	106	2.2
Pajamas/Other	860	456	4.4	97	116	2.5
Total	-	10257	100.0	-	4727	100.0

Source: MSU Phase II Survey Data

4.2.3.2 The Modern Dressmaking Products. The products of the modern dressmakers include blouses, skirts, coats, suits and pajamas. School clothes could also be included in this category. Examples of skirts and coats are shown in Figure 4.5. The pictures reveal a typical pleated skirt, usually worn (well) below the knee, and a women's suit coat. (Admittedly, the choice of colors and patterns thought to go well with one another may be somewhat unusual.)

Women's clothing is available either in the conservative or the more conservative styles. With the rise of Islamic conservativism, women have moved towards a more conservative dress, including long dresses and head coverings. They usually do not wear veils, and probably will not, since they have a style is that distinctly Egyptian but also conservative.

given

and sk

tradit

ballad

dresse

childr

dresse

takin

intui

espec

Figure 4.5: Modern Dressmaking Products

Source: Photographed by the Author

The quantity of production of the modern dressmaking products is given in Table 4.3. The most prevalent articles were dresses, blouses, and skirts, indicating that the modern dressmaker is more active than the traditional dressmaker in urban areas. (The underwear and Gelebeya balladi products are probably traditional products, as are some of the dresses. Many of the pajamas and gelebeyas are probably produced for children, based on the prices given in the Phase II survey.) The dresses, skirts and blouses seem to be in reasonable proportions, after taking out the traditional dresses included in that group. It also makes intuitive sense that more blouses would be purchased than skirts, especially because of the relative prices.

As with the tailors, the traditional dressmakers' products are

produced p
sampled fi
areas. Th
dresses ar
types of p
include bo
children's

The
dressmake
differenc
It probab
tradition
tradition
system ma
spend tim

Th
interest
discussio
market.
of estima
use for p

As
aggregat
implied
of proje

produced predominantly in rural areas, since over two-thirds of the sampled firms which produce gelebeyas, dresses and underwear are in rural areas. The modern products more are mixed in location -- skirts and dresses are usually urban products, but the data collection mixed several types of products together so these distinctions are not clear. Dresses include both traditional and modern styles, while pajamas often are children's clothes in rural villages.

The less dramatic distinction between rural and urban among the dressmakers as compared with tailors may indicate that there are fewer differences in the way that urban and rural women dress than with men. It probably also reflects a relatively larger dependence of women on the traditional system than for men since they purchase both modern and traditional goods in both areas. This dependence on the traditional system may reflect the lower opportunity cost of women's time, so they spend time going to dressmakers and trade time for spending money.

4.2.4 Trends in Consumption of Textile Products

There are two separate markets for textile products that are of interest in this section: the domestic and the export markets. The discussion focuses first on the domestic market and then on the export market. The major trends in each market are discussed with the intention of estimating, however roughly, the quantitative measures of demand to use for projections in Chapter 7.

Assessing trends in demand can be done at different levels of aggregation. To deal adequately with the varieties of clothing and the implied demands on the subsector, a fairly detailed understanding and set of projections is warranted. Table 4.1 made evident the data

require
differe
the cha
clothes
below,
detail
dynami

determ
the le
change
trends
of the
produc
is ea

texti
estim
were
uses,
into
piece
34 pe
produ
good

dema
fini

requirements to make that kind of detailed assessment: the quantities of different types of clothes, the determinants of demand for each type, and the characteristics of the consumers and producers of the different clothes. The need for detailed understanding is recognized and discussed below, but is left for further research. It is not clear how much this detailed understanding would change the picture of the subsector or the dynamics that are estimated in this research.

4.2.4.1 Domestic Consumption Levels and Trends. The basic determinants of demand are a product's price, the prices of substitutes, the level and growth of population, the level and growth of income and changes in tastes and preferences. This section examines the level and trends of these factors in the domestic market. The discussion of prices of the alternative textile products -- home-fashioned, tailored and RMC products -- is made at the end of the chapter in Section 4.4.4 because it is easiest to show the prices after the costs have been discussed.

The domestic market absorbed most of the products of the Egyptian textile subsector. The total disappearance of textile products was estimated in Appendix 2 at 164,961 metric tons, of which about 28,000 MT were for non-garment uses. Of the 136,961 MT that went into garment uses, 37 percent was purchased as piece goods and fashioned in the home into garments, another 29 percent was also purchased from retailers as piece goods and then taken to tailors and dressmakers, and the remaining 34 percent was purchased as ready-made gaments. Seventeen percent of the production was of woven ready-made garments and 17 percent was knit goods.

Population is clearly a positive factor in the growth of overall demand for textile products. The estimated average consumption of finished textile products in this research was 4.02 kilograms per person

in 197

A2.7.)

estima

kilogr

RMC an

finish

in Cha

for te

be est

for s

dwell

surve

expen

urban

per y

sligh

consu

cloth

the

to l

as i

capi

midd

of L

fami

in 1979 for each of the 41 million people in Egypt (Appendix 2, Table A2.7.) Other data are consistent with this calculation. A.D. Little estimated per capita fiber consumption at 5.4 kilograms in 1975 and 5.2 kilograms in 1976. This is higher, but may include waste and exports of RMC and woven fabrics. Thus a figure of about 4 kilograms per person for finished textile goods is probably a good approximation and will be used in Chapter 7 to estimate the effects of population growth on the demand for textile products.

The effects of income growth on the demand for clothing can also be estimated. The consumption of clothing is shown in Tables 4.4 and 4.5 for several categories of total expenditures for rural and urban dwellers. (These figures were derived from a major family expenditure survey done in 1975 (Ikram, 1980, pp. 90-93.) Incomes and clothing expenditures are very low, as 93.6 percent and 63.9 percent of rural and urban inhabitants respectively had total expenditures less than LE 100 per year. Urban dwellers spend considerably more on clothing, but only slightly more as a percentage of total expenditures. On the average, consumers spend 12.1 percent and 13.0 percent of total expenditures on clothing in rural and urban areas.

Less than 5 percent of total expenditures is spent on clothing by the lowest income classes in both rural and urban areas. This increases to 10 percent as income grows to average levels and almost to 14 percent as incomes increase to the top levels.

Family expenditures on clothing are 5.6 and 6.0 times the per capita figures given in the tables for urban and rural inhabitants. A middle class family of six in the rural areas, having total expenditures of LE 51 - 60 per capita, would spend LE 37.72 on clothing for the whole family. That would enable them to purchase roughly LE 22.20 worth of

cloth,

remain

get 22

pieces

exhaus

half o

tries

limite

Exp
Cla

(LI

3
4
5
6
7
8
9
G

Ave

Th

Sou

clot

cloth, or about 65 meters at LE .35 per meter. They would pay the remainder in tailoring services. At three meters per piece, they would get 22 pieces of clothing valued at LE 1.55 per piece, or less than four pieces per person in the family. One suit or one gelebeya balladi would exhaust the entire family budget, however, for even a family in the top half of the income distribution. It is clear why the average person tries to avoid the expense of tailoring, since this savings can extend a limited budget much further.

TABLE 4.4

Total and Clothing Expenditures of Urban Households
By Expenditure Class

Egypt, 1975

Expend. Class	Average Tot. Expend.	Average Clothing Expend.	% Cloth. of Total Expend.	% of Sampled Persons in Class
(LE/person)	(LE/person)	(LE/person)	(%)	(%)
LT 30	-	-	-	-
31 - 40	37.77	1.68	4.4	.5
41 - 50	47.05	3.49	7.4	11.2
51 - 60	57.57	5.88	10.2	7.6
61 - 70	64.46	7.26	11.3	15.4
71 - 80	72.26	9.44	13.1	15.7
81 - 90	87.56	12.31	14.1	13.5
91 - 100	-	-	-	-
GT 100	157.46	21.73	13.8	36.1
Average	99.85	12.97	13.0	100.0[1]

[1]This figure is the total, not the average

Source: Ikram, 1980, pp. 92-93

The income elasticity is a good summary measure of the increase in clothing expenditures related to increases in income. This has been

calcul

forms

The re

number

affect

Ex

C

(LE

I

3

4

5

6

7

8

9

(

Ave

1

So

in th

range

measu

The r

calculated using regression analysis with several alternative functional forms for data that is similar to that presented in Tables 4.4 and 4.5. The results are summarized in Table 4.6. The data is weighted by the number of persons in each expenditure class, so the larger groups will affect the measure of the elasticity more.

TABLE 4.5

Total and Clothing Expenditures of Rural Households
By Expenditure Class

Egypt, 1975

Expend. Class	Average Tot. Expend.	Average Clothing Expend.	% Cloth. of Total Expend.	% of Sampled Persons in Class
(LE/person)	(LE/person)	(LE/person)	(%)	(%)
LT 30	29.07	1.09	3.7	2.2
31 - 40	36.63	2.86	7.8	14.1
41 - 50	46.04	4.63	10.1	34.5
51 - 60	55.39	6.12	11.1	10.0
61 - 70	64.01	8.05	12.6	19.1
71 - 80	-	-	-	-
81 - 90	81.44	12.95	15.9	9.2
91 -100	97.98	13.90	14.2	4.5
GT 100	182.96	26.20	14.3	6.4
Average	62.97	7.65	12.1	100.0[1]

[1] This figure is the total, not the average

Source: Ikram, 1980, pp. 90 - 91

The elasticities in the rural areas were consistently higher than in the urban areas, which might be expected, but there is fairly large range depending on the functional form. The explanatory power in the R^2 measure is good for all forms, and the T-statistics are high in general. The main problem is that the Durbin-Watson statistic is poor for most of

the re

remain

chosen

both

elast

as in

proje

curre

elast

captu

exhib

estim

per

estim

give

perc

impo

in t

tail

to t

impa

in

pro

is

the regressions, perhaps indicating that the correct functional form remains to be discovered.

An elasticity toward the low end of the estimates, 1.25, was chosen for use in the projections for several reasons. The data include both clothing and footwear, so clothing alone might have a somewhat lower elasticity since more of it is presumably being purchased already. Also, as incomes rise and urbanization increases over the course of the projections, the elasticity should drop, and lowering it below its current average is a crude way of incorporating that change in the elasticity over time. Finally, this is still a high elasticity and captures the strong relationship to income that clothing purchases should exhibit at per capita incomes in this range.

In summary, some of the basic determinants of demand have been estimated in the previous analysis. Using the figures of 4.02 kilograms per person and the elasticity of 1.25 derived here, it is possible to estimate the domestic demand for clothing over the intermediate term, given population and income growth rates of about 2.1 percent and 2.0 percent. (These latter figures are estimated in Chapter 6.) An important additional part of the story is the kinds of clothing purchased in the rural and urban areas and the dependence of rural and urban tailors and dressmakers on different clothing items. Thus, in addition to the quantitative measures, the composition of demand will also have an impact on which firms will supply what products. This must be considered in a more informal way, although it is quite important. The validity of projecting quantities when the products are as heterogeneous as clothing is discussed in Chapter 7, where the projections are made.

4.2.4.2 A Preferred Demand Analysis and Its Uses. With the

Funct

Linea
Log-
Log-
Log-

Func

Linea
Log-
Log-
Log-

Note

* No

** E

TABLE 4.6

Extimated Expenditure Elasticities for Per Capita Consumption of Textile and Footwear (by Rural and Urban Location) Egypt, 1975

RURAL ELASTICITIES

Functional Form	$\hat{\beta}_0$	$\hat{\beta}_1$	$\hat{\beta}_2$	$\hat{R}^2$	DW	Elasticity**
Linear	-384.38*	.14	-	.89	.69	1.14
Log-Log	- 6.06	1.38	-	.98	.61	1.38
Log-Inverse	8.04	-4,367.96	-	.76	.88	1.53
Log-Log Inverse	- 6.80	1.45	278.00*	.98	.68	1.44

URBAN ELASTICITIES

Functional Form	$\hat{\beta}_0$	$\hat{\beta}_1$	$\hat{\beta}_2$	$\hat{R}^2$	DW	Elasticity**
Linear	1,075.39	.14	-	.99	.79	1.17
Log-Log	- 4.43	1.20	-	+.00	.80	1.20
Log-Inverse	8.68	-2,227.37	-	.64	.55	.03
Log-Log Inverse	- 5.48	1.30	252.15	1.00	2.02	1.29

Note: Dependent variable is clothing expenditures, $\hat{\beta}_0$ is the constant term, $\hat{\beta}_1$ is associated with total expenditures, $\hat{\beta}_2$ is associated with the inverse of total expenditures in the log-log inverse functional form.

* Not significant at $\alpha = .05$.

** Estimated at the mean of the expenditure series.

what

consu

would

each

inhab

diffe

adver

tailo

the

are

part

incor

comp

inco

summ

matr

clot

grou

The

dema

pref

on t

the

Clo

Egyp

rep

what kinds of data would be most preferred. Different groups of consumers probably have different images of an ideal wardrobe. Thus it would be best to know what the meaningfully different groups are and what each of their wardrobes would be. Young urban males, rural elderly inhabitants, and the neo-conservative Muslims probably have very different ideas of an appropriate wardrobe; their responses to advertising, changes in prices and incomes and their impressions of tailors and dressmakers differ greatly as well.

A great amount of detail would be required to do this correctly: the numbers, qualities and composition of the many items in the wardrobe are important; and the details of the types of groups and their particular preferences, including the effects of price changes and income, should be known. More precise knowledge of what goods are complements or substitutes and the degree of own-price, cross-price and income elasticities by disaggregated product line would be a useful summary of this detailed data. A construction of a demand elasticity matrix as has been done for food products would be appropriate for clothing as well. In the best of all worlds one would be done for each group. Anticipated changes over time should be incorporated as well. The purpose of this study would be to enable prediction of the changes in demand as income, population groups, prices of products and changes in preferences occur. Then this response must be translated into its impact on the subsector, and the reactions of the different firm-groups within the subsector must be assessed as well.

4.2.4.3 World Production, Consumption and Trade in Textile and Clothing Products. The domestic market affords the textile industries in Egypt a primary source of demand. However, trade opportunities also represent important markets for some Egyptian producers, depending on the

demand

activi

factor

sale:

matchi

relati

supply

how th

1980,

mater

cotto

of wo

demand and supply situations of many different countries and the trade activity that those situations encourage. In addition to these basic factors, the exporter must overcome several difficult hurdles to make a sale: negotiating government regulations on exporting and importing; matching quality and fashion of products demanded; and cultivating relationships with foreign buyers. This section summarizes the basic supply and demand for textiles and clothing over the post war years and how they affect the opportunities open to Egyptian producers.

Data on the production of natural and man-made fibers from 1950 to 1980, shown in Table 4.7, illustrates the longer term trend of raw materials used for the textile industries. Since 1950 the production of cotton, the most popular natural fiber, has tripled, while the production of wool has grown more slowly at 60 percent.

TABLE 4.7

World Fibre Production, 1900 - 1980
(Millions of Metric Tons)

	Natural Fibres		Man-made Fibres	
	Cotton	Wool	Cellulosic fibres	Synthetic fibres
1900	3 162	730	-	-
1950	4 647	1 057	1 608	69
1960	10 113	1 463	2 656	702
1970	11 784	1 602	3 579	4 818
1973	13 738	1 432	3 856	7 744
1980	14 039	1 610	3 554	10 673

Source: GATT, 1984, p. 29

incre

fiber

was c

remai

to gr

perce

that

refle

price

from

1981

consu

cour

worl

1953

manu

prod

(LDC

tota

198(

cor

mov

The

use

Within the classification of manmade fibers, cellulosic fibers increased 120 percent from 1950 to 1980, and the production of synthetic fibers literally exploded, so that in 1980 the use of synthetic fibers was close to that of cotton, historically the most used fiber.

During the 1970s, the production of wool and cellulosic fibers remained static, while the production of cotton and synthetics continued to grow. Cotton production grew only modestly during the 1970s, at 1.6 percent a year, but synthetics more than doubled in production during that decade, with an annual growth rate of 7.5 percent. These increases reflect increases in population and income and a decrease in the relative prices of synthetics compared to cotton, as the cost of polyester dropped from about five times that of cotton in 1960 to an identical price in 1981 (GATT, 1984, App. 3, p. 37.) These trends also reflect a change in consumer preferences towards synthetics, a change that may have run its course.

In Table 4.8, the location of production and employment in the world textile and clothing industries is given for selected years from 1953 to 1980. For comparison, the location of production of all manufacturing is also included. In 1953, the developed countries (DCs) produced 82 percent of textile products, while the developing countries (LDCs) had only 18 percent of total world production. The DCs' share of total production decreased from 82 percent to 65 percent from 1953 to 1980, while the LDCs' share correspondingly increased to 35 percent. The corresponding shift in clothing production was more rapid, as the LDCs moved from 8 percent of total production in 1953 to 25 percent in 1980. The relative difference in the labor intensity of production techniques used is also inferred. For example, it required 52 percent of total

TEXTIL

Devo
Ne
Ja
We
EC

Devo
So
Ar
La
Ar

CLOTH

Dev
N
J
W
E

Dev
S
A
L
A

MANU

Dev

De

TABLE 4.8

EMPLOYMENT IN TEXTILES, CLOTHING AND MANUFACTURES[a], 1953-1980

(Percentages: all market economies = 100)

	PRODUCTION					EMPLOYMENT				
	1953	1963	1970	1975	1980	1953	1963	1970	1975	1980
TEXTILES										
Developed countries	82	75	70	66	65	48	34	34	31	27
North America	36	30	27	20	21	10	6	7	7	7
Japan	5	7	10	9	9	9	10	9	9	8
Western Europe	40	35	32	34	32	28	18	16	14	11
EC (9)	36	32	29	31	29	26	16	14	13	10
Developing countries	18	25	30	34	35	52	66	66	69	73
Southern Europe	5	5	6	8	8	6	5	5	6	6
Asia	6	10	11	12	13	36	50	52	51	55
Latin America	6	8	10	11	11	7	7	5	6	6
Africa	1	2	3	3	...	2	4	4	6	...
CLOTHING										
Developed countries	92	86	80	75	75	67	52	49	44	39
North America	59	49	41	31	33	23	16	15	14	14
Japan	1	2	6	9	8	2	6	6	7	6
Western Europe	29	32	31	33	30	40	29	26	21	16
EC (9)	25	27	27	29	26	35	26	24	19	15
Developing countries	8	14	20	25	25	33	48	51	56	61
Southern Europe	2	4	5	9	8	6	7	7	7	8
Asia	3	5	6	8	8	19	31	35	38	40
Latin America	3	4	8	7	7	7	8	6	7	8
Africa	-	1	1	1	...	1	2	3	3	...
MANUFACTURING										
Developed countries	93	90	88	84	83	69	60	61	58	55
North America	59	49	41	32	32	23	17	18	16	18
Japan	2	6	10	2	13	7	10	11	11	11
Western Europe	30	33	34	38	35	37	32	30	28	25
EC (9)	27	29	30	33	31	33	28	27	25	22
Developing countries	7	10	12	16	17	31	40	39	42	45
Southern Europe	2	2	3	4	4	5	5	5	6	6
Asia	2	3	3	4	5	19	27	26	26	29
Latin America	3	4	5	7	7	6	6	6	7	8
Africa	-	1	1	1	...	1	2	2	3	...

[a]All manufacturing excluding food, beverages, tobacco, non-ferrous metals and petroleum refineries.

Source: GATT, 1984.

employment in the LDC textile industries to produce only 18 percent of production in 1953. Apparently there has been a movement towards more capital intensive methods in LDCs, evidenced by the fact that they doubled their share of production while only increasing their share of employment by fifty percent. The output-labor ratio has risen in LDCs over the post war years, either by the application of more capital or other productivity improvements or, most likely, some of both.

Similarly, in clothing it took 33 percent of total employment to produce only 8 percent of the total production in 1953 in the LDCs. A tripling of production required only a doubling of employment. As implied by these proportions, the LDCs require substantially more labor to produce clothing than do the DCs. This, however, is expected given the relative scarcities of capital and labor in the two different categories of countries.

The importance of this change in production location is indicated by observing the final set of data in the table, which covers all manufacturing industries. Not surprisingly, most production is still done in the DCs, although there has been a movement of 10 percent of production from DCs to LDCs since 1953. The importance of textiles in the early stages of industrialization is indicated by the fact that employment and production has been added in the textile industries more quickly than in manufacturing in general.

This growth in production and consumption has been accompanied by an increase in trade as well. The world trade in clothing products went from about $8 billion in 1970 to $28 billion in 1982, representing an enviable 10 percent annual increase in the value of clothing trade. Textile products grew less quickly but still adequately, from $21 billion to $36 billion, at an annual increase of 4.2 percent.

This observation leads to the question of which groups of countries have been involved in the increased textile and clothing trade, which is answered in the last two tables of this section, Tables 4.9 and 4.10. These tables show the pattern of trade among the DCs, LDCs, and Eastern bloc countries. Most exports of both textiles and clothing are imported by the DCs. In 1980, $34.6 billion of textiles and $31.5 billion of clothing went to the DCs from all areas. The LDCs imported some textile products, probably synthetic textile products that could not yet be produced locally or perhaps products for re-export. The Eastern bloc exported and imported relatively little outside its own area. (However, Egypt had a strong dependence on Eastern bloc markets in the early 1970s due to her political affiliations.) The bulk of trade in textiles was DC to DC, although the DC to LDC, LDC to LDC, and LDC to DC components are substantial as well. In contrast, the clothing trade seems to be much more uni-directional, from DC to DC and from LDC to DC. To export clothing, therefore, it is critical that the quality and fashion of the DC markets be understood.

4.3 The Economics of Supply in the Textile Subsector

In these sections, the production and distribution processes are examined, and then their economics are presented in terms of financial and economic budgets. Finally, some of the more consequential factors that emerge from the financial and economic analyses are presented in the last two sections.

TABLE 4.9

TEXTILE EXPORTS BY MAIN AREAS, 1980

(Billion dollars)

Origin \ Destination	Developed countries	Developing countries	Eastern trading area
Developed countries[a]	25.1	8.8	2.2
Developing countries	7.7	6.2	1.2
Eastern trading area	1.6	1.9	1.0

[a] If intra-EC trade is excluded, mutual trade among developed countries is $10.9 billion rather than $25.1 billion.

Source: GATT, 1984

TABLE 4.10

CLOTHING EXPORTS BY MAIN AREAS, 1980

(Billion dollars)

Origin \ Destination	Developed countries	Developing countries	Eastern trading area
Developed countries[a]	15.7	2.1	0.4
Developing countries	13.8	2.8	0.5
Eastern trading area	2.0	0.7	2.3

[a] If intra-EC trade is excluded, mutual trade among developed countries is $6.3 billion rather than $15.7 billion.

Source: GATT, 1984

4.3.1 The Production of Cloth and Garments

This section presents several extensions to the overview of the production processes given in Chapter 3. It is organized around three topics for each of the manufacturing steps. (The distribution functions are discussed in Chapter 5.) First, the basic processes and major variations are presented and then some of the characteristics of the output and inputs at each stage are discussed to illustrate the dimensions of variety that occur in the different stages. The distribution requirements -- the handling, nature of purchasing, major problems and transactions needs -- associated with each stage can then be inferred from the presentation of the first two points.

4.3.1.1 Raw Material Sources for Cloth Production. The textile industries are based on fibrous raw materials, coming from either natural or man made sources. The Egyptian textile subsector utilizes three main raw materials: cotton, wool, and synthetic fibers. The bulk of the raw material stock is cotton fiber, which comprises 81 percent of the raw materials used in 1979, or 179,367 MT out of 221,872 MT used that year. The remaining materials were wool, which totaled 8 percent of usage, and artificial fibers, which made up about 11 percent of the raw materials used. There was almost no imported cotton, but 4,129 MT of wool and 10,139 MT of synthetic fibers were imported in 1979. These values represented 1.9 percent and 4.5 percent of the total raw material usage in the subsector (Appendix 2, Table A2.3.) Cotton is clearly the key raw material input that goes into the textile industries.

In the early 1960s, cotton dominated all agricultural crops in terms of acreage, with 17.1 percent of the cropped acreage devoted to

cotton. Cotton declined in the subsequent 20 years by about 33 percent, to 10.7 percent of the cropped area. Over this period, yields increased and so the production of cotton increased slightly from 487,700 metric tons to 513,200 metric tons (World Bank, 1983, p. 115.) The pattern of yields has been erratic, increasing in the 1960s and stagnating during most of the 1970s, but beginning in 1977 yields for cotton have increased again. The World Bank reports that some of the reasons behind these gains might be: "elimination of marginal areas with lower yields as the total crop area has progressively fallen, an excellent breeding program, more effective pest control, and signficantly improved crop incentives since 1978" (World Bank, 1983, p. 114.) With increased yields and slower growth in the use of cotton, more acreage has been diverted to other crops, as acreage has dropped from 1,600 feddan in 1973 to 984 feddan in 1984 (National Bank of Egypt, Economic Bulletin (hereafter NBE-EB,) p. 335.)

There are indications that the cotton crop would be smaller if there were not mandatory deliveries required by the government. A berseem and corn rotation yielded LE 210 per feddan per year, wheat and corn yielded LE 139, while a cotton and berseem rotation yielded only LE 132. (NBE-EB, 1985, p. 327.) Thus farmers would prefer to grow other crops besides cotton without government intervention. Wool is shorn from local herds of sheep that are shepherded throughout Egypt. The usual sheep is a fat-tailed animal that apparently has fairly greasy wool. The wool is processed by local textile firms who also spin it into yarn. The raw materials for synthetic fibers are a variety of chemicals used in making nylon and polyester and also some cellulosic products derived from wood pulp. Thus inputs for synthetic yarn are drawn from the petroleum subsector and perhaps from imported wood products. The exact sources are

not f

eithe

stap

fila

type

proc

clea

impo

bale

open

in p

fibe

give

comb

crea

card

sliv

funa

twis

imp

imp

det

com

of

app

not important for this research.

4.3.1.2. Spinning Yarn. The raw material for yarn is produced either as staple, short pieces of fiber, or as continuous filament. The staple must be wound together to form a yarn, whereas the continuous filament may be given a crimp or twist only if it is required for certain types of yarn. Thus the manufacture of filament yarn is a different process than that of staple yarn. The prevalent system in Egypt is quite clearly the system for manufacturing spun yarns, given the major importance of cotton.

Staple fibers arrive at the backdoor of the spinning mill in bales, which are cleaned and mixed by being fed through an opener/blender. This loosens the staple as well. The rest of the steps in producing spun yarn involve straightening the staple so that the fibers are all going in one direction and then twisting them together to give them strength. The first part of this process is carding and combing. A carding machine aligns the fibers in one direction, which creates a sheet of drawn and cleaned fiber. As it comes out of the carding machine, it is drawn together in a funnel and emerges as a sliver. These sheets of fiber are stretched and twisted in a series of functions - combing, roving, and finally spinning -- until the fiber is twisted into yarn (Smith, 1982.)

While yarn is always the output of this process, there are several important associated qualities. The raw material composition is important. Also, the tightness of the yarn, or count, is important in determining the characteristics of the fabric that comes from it. The combination of the type of yarn and the type of weave affects the quality of the garments, including comfort, ease of maintanence, durability and appearance (Smith, 1982.) For this research, it is important to realize

that

depe

take

garm

is t

tech

coun

cent

4.6,

yarn

onto

clo

are

yar

ano

and

to

yar

are

ger

yar

dow

of

ch

ma

that the types of fabric and clothes that come from the subsector are dependent on decisions made in the spinning function.

4.3.1.3 Weaving Cloth. The well known objective of weaving is to take spun yarn and weave it into cloth, the basic raw material for garment making. The central, but not only, machine used in the process is the loom. Hand looms have been in existence for many centuries, but technological improvements are still being made to their modern counterparts. Nonetheless, the basic process has remained the same for centuries.

The weaving process can be briefly explained by the use of Figure 4.6, which shows a simple hand loom. The loom is first strung with warp yarns, which are a series of yarn lengths wrapped parallel to each other onto a warp beam so they run parallel through the entire length of the cloth. They are bound together by fill yarns, called weft yarns, which are passed through the warp above some yarns and below others. The fill yarns, after being passed through the warp, are pushed up against one another so that the there are no spaces, and the cloth is formed by warp and weft.

In Figure 4.6, the warp yarns run from the warp beam, (A,) through to the cloth beam, (E,) on which the finished cloth is rolled. The fill yarn, not shown, is inserted at point F in Figure 4.6a. The warp yarns are pulled apart by the heddles and the weft yarn is passed through them, generally on a shuttle that contains a pirn, a spool that holds the weft yarn. Certain yarns can be pulled up at the same time others are pulled down by using different heddles. This represents one of the main sources of variation in the weaving process, because there exists a variety of choices of which yarns to raise and which to lower. The process can be made more complex by the use of a great number of harnesses.

The complete weaving process includes several other steps as well. The warp and weft are transferred from purchased spools onto beams and pirns so they can be used on the loom. The heddles must be cleaned on occasion and the yarn must be immersed in size, which is a starchy solution used to reduce the friction during weaving.

The amount of cloth produced in a given time period is a function of how fast the weft is inserted. Modern looms often use rapiers or fluid jets to help insert the weft more quickly. It is estimated that even in the U.S., only 30 percent of the looms are shuttleless (Schmidt, 1985, p. 23) At this time, only a small number are of this variety in Egypt. Automatic pirn changers, which change the weft yarns when a pirn is empty, and double-width looms are two innovations that are more compatible with the traditional shuttle loom. However, it appears that most of these technological improvements are not cost-reducing in less developed countries, where labor costs are low and high technology products are difficult to maintain (ILO, 1983.)

The weaving process affects the characteristics of the cloth through the colors used, the particular weaving pattern and the tightness of the weave. The pattern and appearance of the cloth are controllable by changing the yarns that are inserted between the warp and how tightly they are pushed together. The choice of colors to use in the warp and weft creates the pattern of colors. The fineness of the yarn determines how many wefts can be inserted. All of these variables add different qualities to the cloth.

A final characteristic of the output is the length demanded by garment makers or wholesalers, which is normally 40 meter bolts. Therefore, the quantity in the basic unit of sale is too small for an efficient run of a loom. The warp yarns on a loom will be around 1,000

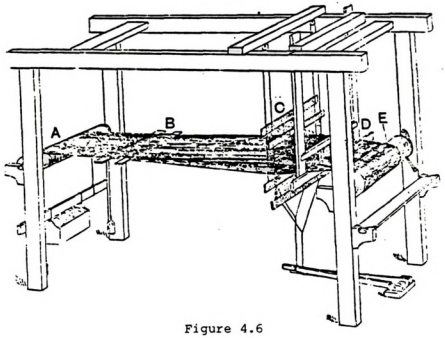

Figure 4.6

Simple Frame Loom

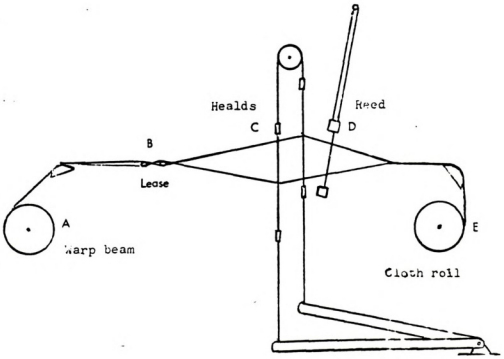

Figure 4.6a

Loom Elements at Time of Weft Insertion

mete

bolt

cont

labo

runn

volt

wea

har

Aft

thr

can

(ab

ord

mat

per

At

or

la

me

va

le

on

ad

ec

mo

meters, so an average run would create the production of twenty five bolts in the amounts sold to wholesalers.

To keep the weaving costs low, it is best to run the looms continuously (provided that there are no extreme costs for overtime of laborers or supervisors.) Less labor is required when the machines are running and the relatively large fixed costs are spread over a higher volume. However, there are several normal breaks in the continuity of weaving. The warp beam runs out of yarn and must be changed. The harnesses for the warp yarns have to be cleaned after every five beams. Afterwards the harnesses have to be restrung, which is similar to threading several thousand needles.

This sets the limit to economies of size in weaving. If a firm can get a cloth order for the amount required to use five weavers' warps (about 5000 meters,) it can produce near the lowest possible cost. The order, however, must be for the exact specification of color, weave, raw material composition and width. (If a loom produces about 24,000 meters per year, this would be ten weeks of production at 500 meters per week. At 133 grams per meter, this is about .67 tons, a large order for small or medium-small ready-made producers or small retailers, and a moderately large order for the small wholesalers. This order is not large for the medium or large firms.) Ultimately, how costs change will depend on the variety of colors and patterns ordered, raw material composition, and the lengths and widths demanded (ILO, 1983, p. 94.)

Thus, in the basic process a moderate economy of scale exists, but one that is not unmanageable by even a system of small firms with an adequate wholesaling industry in place. There are probably other economies of size in maintenance and space utilization, but these can most likely be captured in a relatively moderate-sized firm.

text

fund

the

is t

prod

by m

The

leng

size

numb

layo

On

cut

fro

gar

ple

is

cut

por

ma

of

mu

cu

cl

4.3.1.4Making Garments. The final step in the production of textiles is most often making garments. The production process has two fundamental steps: cutting the garment from a bolt of cloth and sewing the cut pieces together to form the garment. As shown in Chapter 3, this is the function of tailors and dressmakers as well as the factory producers who make up ready-made products.

The cutting process described here refers to that procedure used by most ready-made garment firms with more than seven or eight workers. The process includes spreading out, on top of each other, a number of lengths of cloth. The number of pieces in each garment and different sizes of garments must be known so that optimal length of cloth and number of layers can be determined. The key problem is to lay the cloth layer by layer so that it is stretched neither too loose nor too tight. On the top layer, cut-out templates of each piece are laid to guide the cutting and to minimize the excess cloth required to make the garments.

In contrast, the tailors and dressmakers cut each garment directly from the bolt of cloth brought by the customer. Since the future garments to be ordered and their sizes are unknown to the tailor, each piece must be cut individually after the order has been received.

Setting up the markers especially, but also cutting the garments, is apparently a fairly complex effort. The general objective of the cutting is to get the most pieces out of the smallest amount of cloth possible. However, the pattern of the cloth affects where to put the markers; the thickness of the stack of cloth will affect the difficulty of cutting as will how close markers are laid; and also a calculation must be made about the thickness versus the length to make the quickest cut with the least possibility of error. For all of these reasons the cloth cutter's job requires a very skilled laborer.

After the cloth has been cut, it is sewn. Three production systems are identified by Solinger, which differ by the degree of labor specialization and capital use: the whole garment production system, the subassembly production system, and the progressive bundle system (Solinger, 1980, pp. 441-445.) In the whole garment system, most of the garment is completed by one individual. This is the system used by almost all tailors and dressmakers. In the second system, the subassembly line system, different parts of the same garment are processed at the same time with several work stations or assembly lines making pieces of the garment at the same time. Relative to the whole garment method, this method allows greater specialization of labor and requires more use of capital, such as conveyors, carts and more specialized sewing machines.

In the third system, the progressive bundle system, different operations or jobs are never done simultaneously. The most important distinguishing feature is the fact that one garment is produced in sequence and that there is no backtracking.

In the second and third systems, the amount of specialization differs according to the type of clothes being made and the specialized machinery available. As Solinger puts it, "(N)o definite answer can be given as to which production system is best unless the garment style(s), specifications, working force, and manufacturing policies are known" (Solinger, 1980, p.445.)

As a generalization, the smallest firms use the whole garment production methods; the medium firms often use some version of the sub-assembly system, and the largest firms seem to use the progressive bundle system most often. These are the best systems for each size of firm because the smallest firms cannot specialize; the medium firms often

use

prod

for

into

iron

spe

wid

imp

The

tim

inv

dro

cut

res

50

a

to

re

mi

in

un

in

co

co

use several rooms in an older building and find it is better to spilt the production into separate parts, and the largest firms have fixed lines for long production runs and can use the very specialized and capital intensive progressive bundle systems.

Two other functions included in the production process are the ironing and packing of the clothing according to the retailer's specifications. The output of these processes is obviously clothes, of a wide variety of styles, colors, quality and prices. An additional important but almost inscrutable quality is the label of the product.

Several economies of size exist in the production of garments. The cutting process has substantial economies of size, at least in the time involved per unit. Since few people and little machinery are involved even in the larger firms, the cost per unit for cutting probably drops dramatically as well. Because the skilled labor involved in cutting is scarce, larger firms are able to make better use of that resource. A tailor cuts one garment in 20 minutes, and in two days about 50 pieces could be cut if cutting was his only activity. In contrast, in a medium sized firm about two people could cut nearly 1,000 shirts in two to three days, using LE 1,000 of equipment.

There are also economies of size in the cloth useage in the ready-made cutting process because the amount of extra cloth required is minimized. Some of these advantages were assumed in the budgets created in this chapter. How large a firm must be to minimize the losses is unknown. An indication is that firms in the U.S. are finding the savings in labor time and cloth losses significant enough to invest in computerized design of the cutting markers, and they claim that the extra cost is recovered in three to five years.

In the sewing process, there is a hypothetically fixed lower limit

in t
sewi
beca
One
to s
faci
need
econ
hand
dep
giv
be

fun
pro
can
For
use

fi
ta
cr
gu
it
in

in the production of a garment, which is a function of the speed of the sewing machine and the number of stitches. The limit is never approached because the garment must be repositioned and reinserted into the machine. One RME production manager remarked that 85 percent of the time required to sew a garment was taken up by handling, and this was in a modern line facility. The tailor using the whole garment production process must need several times the handling as in the modern facility. There are economies of size because the production can be reorganized to reduce handling and labor costs. Whether this results in an economy of size depends on the cost of the additional capital and the labor saved, but given the prevalence of the line system in modern firms it is likely to be the case.

As with the weaving firms, the economy of size mainly occurs as a function of the size of a uniform order. The set-up time for a line production operation is quite long, so down time between production runs can be long, especially if the products being made are quite different. For small orders, it is less costly for the whole garment method to be used.

4.3.2 The Financial Budgets for Firm-groups in the Subsector

This section presents the financial budgets for the main firm-groups in the subsector. These budgets, with the exception of the tailoring and dressmaking budgets, are synthetic budgets because they are created from a number of sources. The various sources offered partial guides to the construction of the budgets but no one was sufficient in itself. The data sources are shown in Appendix 3. The data sources include statistical surveys, secondary data sources about actual Egyptian

cond

econ

is p

wher

clo

exa

hor

of

fir

and

ana

in

App

rep

agg

eco

eff

pro

bud

ave

fi

the

ou

so

so

conditions, personal interviews with manufacturers and distributors, and economic-engineering studies.

The objectives of creating these budgets are several. First, it is possible to identify the major components of total costs to determine where reductions have the greatest possibility of decreasing the cost of clothing. Second, some of the incentives to vertically integrate can be examined. Finally, it is possible to see the costs of and potential for horizontal expansion by examining the fixed assets and relative profits of different firm-groups. Thus, the liklihood of expansion by different firm-groups can be analyzed.

There are a number of limitations in using these budgets. First, and most obvious, it is not possible to say that a statistically valid analysis has been done, because the budgets used do not represent firms in the system specifically. However, extensive efforts were made in the Appendices to correlate the budgets with aggregate figures, so they represent prices, technologies, and firm sizes that make sense in the aggregate. Also, it is not possible to do the standard tests that economists do with enterprise data -- tests for economies of scale, the efficiency of pricing and resource use, and the proper allocation between product lines -- because there are not the usual statistical series of budgets from which to estimate production functions, and because many averages were used so differences in factor prices and the impacts on firm size and technology use cannot be observed. It is contended that the dynamics of reinvestment and of market changes will determine the outcomes to a larger extent than will the fine gradations in efficiency sought in the usual analyses, and these dynamics have been assessed to some degree.

The budgets in the following sections represent a hybrid between

economic and financial budgets. Market prices are used without adjustment, but the capital costs reported are the flow-costs, which represent foregone interest and depreciation, regardless of whether these are actually counted or paid by the firm. Interest on working capital is likewise an opportunity cost rather than the actual interest paid. No account of the possibility of minimizing taxes through accounting methods is included either. Finally, the wages are for all employees in the firm, regardless of whether they are unpaid family labor or not, so the actual cash flow and profits of the firms may be greater than stated here.

4.3.2.1 The Financial Budgets for the Private Weavers. The financial budgets for the weaving firms are contained in Table 4.11. The major cost is for intermediate raw materials, mainly yarn, which amounts to about 60 percent of the total sales value. The second highest component is wages, which is considerably less than intermediates, at about 18 percent of sales for the smaller firms. This figure then drops to 16 percent for the largest firms. The third largest category is the cost of capital, which is 6.5 percent of sales for the smallest firms, and 9.4 percent for the largest firms. Interest and utilities are small proportions of costs. The net profit before taxes ranges from 12-15 percent, with the medium firms having the lowest profits and the small firms having the highest returns.

There is a relatively fixed amount of yarn required to make a meter of cloth, so the possibilities for reducing costs from better management of yarn use are limited. The quality of the yarn determines the costs associated with breakage, which affects the capital costs through downtime and the amount of labor required (ILO, 1983, p. 49.) Variations in these factors have not been assumed.

TABLE 4.11

Financial Budgets for Private Weaving Firms
By Size of Firm

Egypt, 1979

(Egyptian Pounds)

Cost Category	Firm Size Small	Medium	Large
SALES	19,800	292,500	1,406,250
INPUTS:			
-Intermediates	11,685	171,893	826,406
-Wages	3,600	46,800	225,000
-Utilities	180	2,652	13,662
-Interest	73	1,432	10,330
-Capital Cost	1,287	33,188	132,872
TOTAL COSTS	16,825	255,965	1,208,270
NET PROFIT BEFORE TAXES	2,975	36,535	197,980
-Taxes	268	11,691	63,354
NET PROFIT	2,707	24,844	134,326

Source: Appendix 3

cos

red

hav

fur

sec

up

13.

li

se

re

th

The cost of production may also be controlled by reducing the flow costs of capital, either by running the plant at a higher rate or by reducing the downtime of machinery. Relatively high utilization rates have already been assumed, at 14.3 hours per day for six days a week. To further decrease the costs of capital would require a greater use of second shifts. Given the small proportion of total costs that are made up of capital, from 7.6 percent of total costs for the smallest firms to 13.0 percent for the medium firms, the possible gains seem to be modest.

TABLE 4.12

Budget Analysis for and Public Private Sector Weavers
By Firm Size

Egypt, 1979

Ratio	Small	Medium	Large	Public Sector
(1) Value Added/Employee	1,353	1,546	1,546	1,493
(2) Profit/Employee	496	468	528	x
(3) Value Added/Kilogram	1.39	1.40	1.40	x
(4) Profit/Kilogram	.51	.42	.48	x
(5) Profit/Total Assets	.25	.12	.17	x
(6) Total Assets	11,800	299,760	1,185,700	x
(7) (Working Capital)	(730)	(14,324)	(103,300)	x
(8) Investment/Worker	1,967	3,843	3,161	x

Source: Compiled by the Author from Appendix 3.

Inventory management and management of utilities also offer limited potential for cost reduction. Further reductions in costs would seem to come mainly from the increased use of second shifts, the reduction of lost time due to breakdowns or electric power shortages, and the use of higher speed looms (See Section 4.3.1.3).

In Table 4.12, the value added and profits of each firm are

mea

and

of

few

uni

for

inv

dic

pur

On

in

ow

th

ar

as

sc

fi

ap

st

va

fi

4,

th

m

t

measured relative to the total investment, the total output in kilograms, and the total number of workers. Much of what they show are the results of the assumptions that went into the budget calculations. Relatively few economies of size were assumed in these budgets, so most of the per unit figures remain fairly constant throughout the range of firms, except for the return on investment.

The smaller firms have a higher profit relative to total investment than do the larger firms because of the assumption that they did not have a complete set of pirning and beaming equipment. They purchased a pirning and beaming service rather than owned the equipment. On the other hand, the smallest firms paid a higher cost for inputs to include the purchase of these services. If it were assumed that they owned the equipment, their utilization rates would have been low and their return to investment lower than for the other firms. The profits are also lower in the smallest firms because their productivity was assumed to be slightly lower to reflect a less rigorous maintenance schedule on equipment and a higher percentage of work stoppages.

The value added per employee is very consistent with the same figure for the public sector, which was calculated using a very different approach. Thus the prices faced, the technology used, and the cost structure may be fairly similar. (Many combinations of different variables can lead to a similar value added, however.)

4.3.2.2. The Financial Budgets for the Private Wholesalers. The financial budgets for the wholesaling industry are contained in Table 4.13. The industry has two types of firms, small and large. For both, the intermediates represent 94 percent of sales, reflecting the allowed mark up of 6 percent. Thus, the remaining costs must be small compared to the cost of intermediates if the firms are to be profitable. However,

as the budgets show, they are not small enough for the small firms to have positive profits. The profit rate, as a percentage of sales, is small also for the large firms, at 1.6 percent of sales. Interest costs are the largest cost after intermediates and the net profit will be quite sensitive to the actual interest paid.

TABLE 4.13

Financial Budgets for Wholesaling Firms
By Size of Firms

Egypt, 1979

(Egyptian Pounds)

Item	Small (LE)	Large (LE)
SALES	45,000	2,000,000
INPUTS:		
- Intermediates	42,453	1,886,792
- Wages	1,200	18,000
- Utilities	90	1,200
- Interest	1,061	47,170
- Capital Cost	302	4,017
- Others	200	10,000
TOTAL COST	45,305	1,967,178
NET PROFIT BEFORE TAXES	-306	32,821
- Taxes	-	10,503
NET PROFIT	-306	22,318

Source: Appendix 3

The sales figures given in the budgets reconcile with the macro figures computed in Appendix 2. However, they do not lead to profitable micro constructions. Probably, more product goes through the private wholesalers than is calculated here, or they are able to get higher mark ups on certain kinds of cloth. Whatever the revision, it still seems

that the wholesaling is a low profit business and requires a substantial volume to break even.

The budget analysis ratios are presented for the wholesaling industry in Table 4.14. The profit related figures are not calculated for the small firms because of their negative profits. Evidently, large economies of size exist with respect to the labor required, as seen in line 1. The public sector estimates show that the value added per laborer goes up dramatically as the size goes up.

TABLE 4.14

Budget Analysis for Private and Public Sector Wholesalers
By Firm Size

Egypt, 1979

Ratio	Small	Medium	Large	Public Sector
(1) Value Added/Employee	1,274	x	3,774	25,667
(2) Profit/Employee	-	x	1,094	x
(3) Value Added/Kilogram	.19	x	.19	.17
(4) Profit/Kilogram	-	x	.056	x
(5) Profit/Total Assets	-	x	.064	x
(6) Total Assets	13,613	x	511,698	x
(7) (Working Capital)	(10,613)	x	(471,698)	x
(8) Investment/Worker	6,807	x	17,057	x

Source: Compiled by the Author from Appendix 3

Unfortunately the profits are not known for the public sector, but it might indicate that for very large wholesalers, a 6 percent markup is more than adequate. In the private sector that mark up is constraining for both the small and large firms because they have either negative or small positive returns.

4.3.2.3 The Financial Budgets for the Private Ready-made Garment

Fir

give

calc

wher

of i

firm

labo

the

Sal

Firms The financial analysis of the ready-made clothing industry is given in Table 4.15. There are four sizes of firms, corresponding to the calculations made in Appendix 2, not to the channels in the subsector, where the medium and medium-small firms are grouped together. The cost of intermediates is high, at almost 70 percent of sales for the small firms, but it drops to 59 percent for the larger firms. The cost of labor is 11-13 percent for all firm sizes, with the smallest firms having the highest costs.

TABLE 4.15

Financial Budgets for Ready-made Clothing Firms

Egypt, 1979

(Egyptian Pounds (LE))

	Small (LE)	Med-Small (LE)	Medium (LE)	Large (LE)
SALES	13,703	130,500	391,500	783,000
INPUTS:				
- Intermediaries	9,440	87,000	293,250	462,840
- Wages	1,800	15,000	45,000	90,000
- Utilities	108	900	2,700	5,400
- Interest	39	725	1,994	5,786
- Capital Costs	617	7,118	26,283	67,349
TOTAL COSTS	12,004	110,743	315,227	658,375
NET PROFIT BEFORE TAXES	1,699	19,757	76,273	124,625
- Taxes	153	6,332	24,407	39,880
NET PROFIT	1,546	13,425	51,866	84,745

Source: Appendix 3

Capital charges also increase with firm size, from 4.5 percent of sales to 8.6 percent of sales. The other cost items are minor. A quite

diff

emer

the

15.9

and

dif

int

inc

pur

cap

wor

be

str

sh

fi

pe

in

ot

pe

co

ir

ha

Th

o

P

different picture from either of the other two industries viewed so far emerges with respect to profits. Profits before taxes are larger than in the other industries, being 12.4 percent, 15.1 percent, 19.5 percent, and 15.9 percent as percentages of sales for the small, medium-small, medium, and large firms respectively.

All of the variations between sizes of firms occur because of differing assumptions in the budget estimation. The cost of intermediates drops because cutting the cloth becomes more efficient with increased size, and because the smaller firms must pay the cost of purchasing through a wholesaler, while the larger firms do not. The capital cost increases through the assumption of a higher capital per worker as the firm size increases. Finally, the labor cost is assumed to be higher for the largest firms because they have a larger management structure, so the average wage increases.

The ratio analysis is presented in Table 4.16. Most of the ratios show increasing values to the medium-sized firm, with the largest firm-groups being somewhat lower in some cathegories. The value added per kilogram is interesting because it gives a measure of the cost added in each stage. The RMC stage has far more value added than any of the other stages considered so far. Weaving had about LE 1.40 of value added per kilogram, and wholesaling had only about LE .18 per kilogram. This compares with the value added between LE 2.03 and LE 2.88 in the RMC industry. (The value added is high for the larger firms because they have a lower cost of intermediate inputs and have the same output price. The savings in inputs reflects an increased value added, but this is offset by increased capital and labor costs, so that the profit percentages are smaller.)

4.3.2.4 The Financial Budgets for the Private Retailing Firms.

The small firm with three employees and the medium firm with eight employees are the two representative firms in the retailing industry. The financial budgets for these firms are shown in Table 4.17. The cost of intermediates is high, at 83 percent of sales for all firms, because the provision of inventory is the main function of retailing. The budgets

TABLE 4.16

Budget Analysis for the Private and Public Ready-made Garment Firms By Size of Firm

Egypt, 1979

(Egyptian Pounds (LE))

Ratio	Small	Med-Small	Medium	Large	Public Sector
(1) Value Added/Employee	1,421	1,740	2,030	2,134	690
(2) Profit/Employee	566	790	1,017	1010	x
(3) Value Added/Kilogram	2.03	2.25	2.63	2.88	1.14
(4) Profit/Kilogram	.81	1.02	1.32	1.36	x
(5) Profit/Total Assets	.29	.29	.32	.25	x
(6) Total Assets	5,943	68,500	241,186	613,000	x
(7) Working Capital	(393)	(7,250)	(19,936)	(58,000)	x
(8) Investment/Worker	1,981	2,740	3,216	4,087	x

Source: Compiled by the Author from Appendix 3

were created by reconciling the product flow through the industry, the number of employees estimated to exist in the different sizes of firms, and an estimated mark up.

Wages are 5.5 percent of sales in the smaller firms, but only 2.2 percent in the larger firms. Capital costs are 2.8 percent of sales in the smaller firms and 2.7 percent in the larger firms. Interest on working capital, because it is directly tied to intermediates that

TABLE 4.17

Financial Budgets for Retailing Firms
By Size of Firm

Egypt, 1979

(Egyptian Pounds)

Item	Small (LE)	Medium (LE)
SALES	32,529	220,923
INPUTS:		
- Intermediates	27,051	183,720
- Wages	1,800	4,800
- Utilities	150	300
- Interest	676	4,593
- Capital Cost	901	6,009
- Other	500	2,000
TOTAL COST	27,734	201,422
NET PROFIT BEFORE TAXES	1,451	19,501
- Taxes	131	6,240
NET PROFIT	1,320	13,261

Source: MSU Survey, Special Questionnaire

generate similar percentages of sales, remains the same in both sizes of firms at 2.1 percent of sales.

The result of the reconcilation points to substantial economies of size. As a result of these derived economies of size, profits are higher in the large firms, at 8.8 percent of sales, versus only 4.5 percent in the smaller firms.

TABLE 4.18

Budget Analysis for Private and Public Sector Retailers
By Size of Firm

Egypt, 1979

(Egyptian Pounds)

Ratio	Small	Medium	Large	Public Sector
(1) Value Added/Employee	1,826	4,650	x	17,571
(2) Profit/Employee	484	2,438	x	x
(3) Value Added/Kilogram[1]	.52	.52	x	.56
	1.59	1.59	x	1.43
(4) Profit/Kilogram	.22	.43	x	x
(5) Profit/Total Assets	.09	.18	x	x
(6) Total Investment	15,763	105,930	x	x
(7) Working Capital	(6,763)	(45,930)	x	x
(8) Investment/Worker	5,254	13,241	x	x

[1]Top Figure is for Cloth and the Bottom is for Clothing

Source: Compiled by the Author from Appendix 3

The set of financial ratios used to analyze the retailing firms is shown in Table 4.18. The economies of size are reflected here as well, since the value added and profit per employee are larger for the medium firms than for the small firms. The value added per kilogram is broken into the gains on the sales of clothing and cloth, with the value added being over twice as much for clothing than for cloth.

In both of the distribution functions, wholesaling and retailing, economies of size appear to be quite substantial. Larger firms should thus be able to operate with smaller margins and reduce the cost of the final product. The level of inventory is another source of cost reduction that was not included but logically appears to be important. In retailing there is a minimum amount of inventory required for a firm to make a sale, and this may be relatively large compared to the level of sales in the smallest firms. The level will increase but at a decreasing rate, so that the ratio of inventory to sales should drop as the firms get larger. The inventory costs are determined by the working capital requirements, and from the budgets given here, a ten percent decrease in the level of inventory required would only yield a moderate cost reduction. In the aggregate, perhaps, the more important implication is that the space required for retailing in a system of small firms would be higher.

The space required for selling clothing versus cloth may be quite a bit higher. If it is assumed that the amount of cloth going into the system is the amount necessary to clothe the population, more retailing space may be required to maintain an inventory that offers the variety demanded by consumers. This increase in space needed might occur because of the increased varieties that must be stocked.

4.3.2.5 The Financial Budgets for the Tailoring and Dressmaking Firms. The financial budgets for the tailoring and dressmaking firms are shown in Table 4.19. These budgets were created using data from the MSU Phase II surveys, so they reflect a sample survey rather than a synthetic compilation of diverse sources. The composition of costs is somewhat different than for any of the other firms. First, the intermediates are

TABLE 4.19

Estimated Financial Budgets for
Tailor and Dressmakers

By Rural and Urban Producers

Egypt, 1979

(Egyptian Pounds)

Cost Category	Dressmakers		Tailors	
	Rural	Urban	Rural	Urban
SALES	375	912	889	2,147
INPUTS:				
- Intermediates	97	92	243	292
- Wages	11	109	23	384
- Rent	3	9	27	62
- Capital Cost	27	27	25	25
TOTAL COST	138	237	318	763
NET RETURN TO FAMILY LABOR	237	675	571	1,384
- Taxes	-	-	-	125
NET RETURN	237	675	571	1,259

Source: Compiled from Appendix 3

far less important than in the other industries, at 26-27 percent of sales for the rural producers and much lower, at 10 percent and 14 percent, for urban dressmakers and tailors respectively. The differences in these costs between locations has to do with the styles of products produced. In the rural areas there is much use of silk and lace trim, which is not found in the urban areas. Wages are a very small proportion of costs in rural areas, at less than three percent of sales, while in urban areas they are 12 percent and 18 percent for tailors and dressmakers respectively. Most labor is done by households and the returns above costs are usually the returns to the primary worker.

The returns are not profits, but rather the returns to family labor and management. This return has not been broken down farther mainly because determining the value of family labor was difficult. One idea would be to use the LE 50 used in the other budgets as the average wage. Then the urban dressmakers and rural tailors would be just about breaking even, after taking out LE 600 for the value of the manager's labor. The urban tailor would be doing well and the rural dressmaker

TABLE 4.20

Budget Analysis for Tailoring and Dressmaking Firms
By Rural and Urban Producers

Egypt, 1979

(Egyptian Pounds)

Ratio	..Dressmakers.. Rural	Urban	....Tailors.... Rural	Urban
Value Added/Employee	189	386	349	736
Value Added/Kilogram	1.17	3.81	2.69	6.91
Total Fixed Assets	182	182	334	334

Source: MSU Survey, Special Questionnaire

would lose money. However, the opportunity cost of different producers varies, so there may be better adjustments than LE 50, but this exercise does show the returns relative to a fulltime industrial laborer.

4.4 Special Considerations

Several analyses are performed in this section using the results from the financial budgets presented before. They include an analysis of the potential for vertical integration and the possible expansion of different firm-groups in the subsector. The impacts of productivity and price changes on profits are then discussed, and finally, a comparison between channels is made for the costs as they accumulate through the stages of production.

4.4.1 Incentives for Vertical Integration in the Subsector

Firms vertically integrate to increase profits and assure a source of supply, among other things. If a firm wants either an assured outlet for its product or an assured level of inputs (for whatever reasons), then it would consider buying another function only if the firm being purchased (or started) is of appropriate size. Thus the first analysis is how well the product flows match between different stages and sizes of firms. This is however, only a necessary and not sufficient condition. The impact of variety will be discussed later.

In the second analysis, the profitability figures are reconsidered to see which firm-groups might integrate into other stages to achieve

---

DRE

TAI

RMC

RET

WHC

WEA

SPI

---

[1]No

Sou

TABLE 4.21

Estimated Volume per Firm
By Size of Firm

Egypt, 1979

(Metric Tons)

	Private Sector			Public Sector
	Small	Medium	Large	
DRESSMAKER				
- Rural	.24	x	x	x
- Urban	.21	x	x	x
TAILOR				
- Rural	.24	x	x	x
- Urban	.27	x	x	x
RMC	2.1	32.2	111.1	604.2
RETAILING				
- Cloth	4.4[1]	33.7	x	10,062
- Clothing	2.2[1]	12.3	x	4,245
WHOLESALING	13.2	x	578.4	22,740
WEAVING	5.9	86.5	415.6	6,416
SPINNING	x	x	x	12,112

[1]Not Including Itinerant Retailers

Source: MSU Survey, Special Questionnaire

higher re

afford t

investme

The aver

in the p

of volum

Reta	
RMC	
Whol	
Weav	

[1]Comp

[2]Numb

Sourc

in the

the sma

alone

the me

higher returns. Finally, the question of whether a certain firm can afford to buy another firm is addressed by looking at the total levels of investment required and the resources available to different firm-groups. The average volume by firm-group is presented in Table 4.21 for all firms in the previous budgets. Some combinations are quite compatible in terms of volumes used. The potential points of integration

TABLE 4.22

Total Investment and Available Resources[1] Per Firm
By Function

Egypt, 1979

(Egyptian Pounds)

Function	Small	Medium-Small	Medium	Large
Retailing	15,763 (5,359)[2]	x	105,930 (79,448)	x
RMC	5,943 (12,480)	68,500 (100,010)	241,186 (373,838)	613,000 (539,440)
Wholesaling	13,613 (-)	x	x	511,698 (51,698)
Weaving	11,800 (21,112)	x	299,760 (98,921)	1,185,700 (877,418)

[1]Computed as ((ROA - .05)*Total Investment)* 5 years * 2. See Text

[2]Numbers in parentheses are Available Resources

Source: Computed from Appendix 3

in the subsector based on volume alone are in the following combinations: the small RMC producer and the small retailer (if the clothing volume alone is considered); the small and large weavers and wholesalers; and the medium and large RMC producers with medium retailers, although there

will be s

Tw

producer-

(See Chap

medium or

of the la

argued la

will have

Th

small wh

problem

small RM

variety

too high

small re

quite at

T

the issu

producer

-- so mo

are larg

the othe

RMC pro

for bot

to uniq

explain

play ca

will be some excess production by the RMC firms.

Two of these combinations were quite evident, the small RMC producer-retailer combination and the large wholesaler-weaver combination (See Chapter 5, Section 5.1.1.) Combinations of medium retailers with medium or large RMC producers are not yet as prevalent, perhaps because of the large amount of cloth still sold by retailers. But, as will be argued later, there are many reasons for this combination to occur and it will have consequential impacts on the evolution of the subsector.

The problems of achieving variety at reasonable cost makes the small wholesaler and weaver an unlikely combination. This is not a problem for the small RMC-retailer connection because the strength of the small RMC producer's production technique is the ability to produce variety in small lots at a reasonable cost, if the labor costs are not too high or if the clothing is high fashion and low volume. With many small retailers looking for unique products, this combination is often quite attractive.

The wholesaling function seems to be a breaking point regarding the issue of variety. The variety required by wholesalers, ready-made producers and retailers is tremendous -- and different for each function -- so most integration may come between wholesalers and weavers, if they are large enough, because the variety required is moderate; and then on the other side of the wholesalers there may be integration between the RMC producers and retailers. Finally, there appears to be an incentive for both RMC producers and retailers to own small weavers to have access to unique inputs, although the variables in this section do not really explain this phenomenon.

The question of the role that differing rates of profitability play can be addresed quickly. The rank of return on total assets (ROA)

after ta

wholesal

small re

11.4 per

producer

with gre

included

operatio

that fi

firms w

but wou

analysi

expansi

4.4.2

subsect

firm a

is done

for ex

profit

in its

the fo

after taxes in the different functions was, from lowest to highest: small wholesalers, with losses; large wholesalers, with a 4.4 percent ROA; small retailers and medium weavers, about 8.3 percent ROA; large weavers, 11.4 percent ROA; medium retailers, 12.5 percent ROA; large RMC producers, 13.8 percent; and all other RMC producers and small weavers, with greater than 17 percent ROA. The tailors and dressmakers are not included in this table because their volume produced and mode of operation makes them different. This ranking indicates the functions that firms probably will buy or start and the ones they will avoid. Most firms would like to integrate into a RMC facility or a large retailer, but would not consider a small wholesaler.

The final question that remains is who can afford whom ? The analysis of this question pertains to both vertical and horizontal expansion, and is included in the following separate section.

4.4.2 The Potential for Expansion by the Firm-groups in the Subsector

The potential for expansion by the different firms in the subsector is assessed in Table 4.22, which shows the total assets per firm and the available resources. The calculation of available resources is done to give a feeling for the possible resources a firm might have for expansion into another function. This calculation takes into account profits, the requirement that the firm has to maintain its market share in its original business, and the role of credit. The formula used is the following:

$$AR = ((ROA - .05)*TI)* 5 \text{ years} * 2$$

and is

The val

assumed

distrib

finance

percent

percent

financi

the pro

investm

every $

multipl

get fir

generat

quite

weavers

the lar

they wo

could

in effe

functio

attract

Where: AR = Available Resources (LE)
ROA = Return on Assets
TI = Fixed and Working Capital Investment

The return on investment is the starting point for this analysis, and is computed as profits after taxes as a proportion of total assets. The values were given in the earlier paragraph for most firms. It is assumed that about 5 percent of that return is required to meet distributions to investors and laborers (3.25 percent) and also to finance expansion to meet the anticipated growth of their market (1.75 percent.) The growth in the market is estimated in Chapter 7 to be 3.5 percent. The firms are all assumed to be able to gain leverage through financial arrangements up to a 1:1 ratio, so they only require half of the profits each year to finance the increment needed.

The excess of ROA above 5 percent is available for other investments. It is assumed that the firms only makes these decisions every five years and so the total available resources for a year are multiplied by five years. Finally, the firms are assumed to be able to get financing at the same 1:1 ratio for other acquisitions.

The major observation is that the RMC firms of all sizes seem to generate the most resources and hence can expand into other functions quite rapidly. The wholesalers are struggling at any size, and the weavers and retailers have moderate ability to expand. It is clear that the largest firms could expand into any of the other functions, although they would not be interested in most of them. Weavers and retailers could defer expansion several years and then move into the RMC function, in effect buying a "cash cow." The RMC firms would choose other functions based on strategic interests. The retailers are most attractive in this regard since they have good profits and can be

"influe

final n

oversta

expense

adequat

with th

profits

Also, t

problem

inevita

Investm

availab

the bar

access

assets

to cred

profits

the ab

investm

costly

impacts

also t

given

missed

increa

"influenced" through ownership to move into the sale of RMC products. A final note is that the available resources for the small firms may be overstated since they use most of their returns for family living expenses and have probably more trouble getting outside finance.

The ability to expand takes more than just these figures being adequate. Access to credit is important because the firm can then expand with the market and as it earns profits, rather than waiting for the profits to accumulate to be able to afford the increased investment. Also, there are many institutional, regulatory, and general development problems in trying to expand at this rate constantly. There will be inevitable slowdowns, mistakes, and problems in obtaining financing. Investment may not be the only constraint either, so that its availability may only be a necessary but not sufficient condition.

The access to credit will certainly be uneven, given the state of the banking community at this time (See Chapter 6, Section 6.4) The access will be better for the firms that are larger, have easily saleable assets to finance, or are more profitable. Those firms that have access to credit will gain market share more rapidly than others with similar profits but less access.

The frustrations of doing business in Egypt will certainly affect the ability of firms to expand. Supplies do not arrive on time, investment permits may be denied, access to foreign exchange can be costly, and the visibility of a rapidly expanding firm can have negative impacts. Underneath these average rates of expansion assumed here is also the fact of uncertainty. Growth cannot be assured, especially for a given firm, so there will be both overinvestment resulting in losses and missed opportunities. The RMC firms cannot anticipate with certainty the increase in that market and weavers cannot be sure they will get the

necessa

always

Egypt.

4.4.3 T

for mos

of firm

to beat

prices

assess

illustr

factors

moderat

output

prices,

.01 dr

weaver

only s

Howeve

the ma

interv

conser

budget

from 1

necessary allocation of yarn from the public sector. While this is always true in business, the situation is arguably more difficult in Egypt.

4.4.3 The Impacts of Different Prices and Productivity Changes on Profits

The budgets calculated in this chapter have assumed average rates for most costs and have been adjusted mainly to account for the effects of firm size and changes in the technologies used. Firms that are able to beat the averages are able to gain extra profits or charge lower prices (or both.) The budgets that have been constructed are useful to assess what changes will make a difference. This is done in an illustrative fashion in the following paragraphs, which consider the main factors that might change in each of the industries and the results of a moderate change.

The weavers can improve productivity or can try to get better output or input prices. They appear to have little latitude to drop prices, given their modest returns at this point, and the fact that a LE .01 drop in the price would decrease profits by 16% for the large weavers. The inverse move is quite important. Those firms that can get only slightly higher prices on average can get quite good profits. However, with the increase in prices comes the increase in the risk in the market, because it is a thin and erratic market,according to interviewed weavers.

The main possible productivity improvements are in labor and yarn conservation. Losses of 10 percent on the yarn were assumed in the budgets; reducing that to 7% would increase before tax profits to 14.1% from 12.7%, a moderate improvement. A 10 percent gain in the

product
3.0, wo
one loo
countri
profits
the two
Thus th
spinnin

improve
about 1
not rec
improve
Also, a
much be
firms
they m
to mak

prices
cause
They a
weaver
raw ma
per ga
10.3%,
produc
by one

productivity per laborer, decreasing the laborers per loom to 2.7 from 3.0, would result in almost a 11.4 percent increase in profits. Since one loom operator tends many looms weaving sheds in the developed countries, the number of laborers per loom could be much lower, and profits could increase. Well-maintained looms and high quality yarn are the two most important ingredients in getting high labor productivity. Thus the competitiveness of the weaver will depend on the quality of the spinning function as well.

A 3 percent decrease in the price of yarn (about LE .05) would improve profits as much as a drop in the losses of yarn in production, about 10.4%, and would probably be an easier effort and one that would not require constant vigilance. Getting prices down appears to require improved productivity, which is highly dependent on the spinning firms. Also, access to better markets with slightly better prices can lead to much better profits. From this sketch, it is easy to see how the weaving firms might be looking for connections to avoid the wholesaler because they might get better prices of output which could improve prices enough to make a dramatic impact on the bottom line.

Similar pressures exist in the RMC firms as well. Dropping the prices by LE .05, from an average price of LE 2.25 to LE 2.20, would cause a decrease in profits of LE 8,700, or 11.4% drop before taxes. They are not quite as sensitive to small changes in prices as are the weavers, and they are about as sensitive to a reduction in the losses of raw material inputs in production. Decreasing the amount of cloth used per garment from 2.5 meters to 2.4 meters would increase profits by 10.3%. Just as with weavers, big gains can come from improving the productivity of labor. Increasing the average production of each laborer by one garment, from eight to nine garments per day (a 12.5% gain in

product

prices
product
lose on
careful
supplie
Avoidin
markets
should
these c

Their m
their i
working
at 6%,
invento
to 2.5
their

turnov
margin
cloth
produc
23.6%,
small
would
firms

productivity), would increase profits by 25% before taxes.

For the production firms in the subsector, the need for good prices of outputs and inputs and the need for improving labor productivity is clear. It also appears to be clear that the firms win or lose on quite small advantages or disadvantages. Thus management must be careful, search out the best prices and relationships with customers and suppliers, and must constantly push for better labor productivity. Avoiding wholesalers, getting discounts, or selling to higher-priced markets can all be methods to increase profits from small advantages. It should be assumed that most firms are in fact searching constantly for these opportunities.

For the distribution firms, the situation is somewhat different. Their main avenue for improved profits is to increase the mark up on their inputs or increase the turnover of their inventory to decrease working capital costs. Since the margins are fixed for the wholesalers at 6%, their main avenue for improved profits is to get the costs of inventory down. If the time on hand of the inventory drops from 3 months to 2.5 months, profits would increase by 24%. Dropping 10 percent of their workers would only increase profits by 6% before taxes.

Retailers with higher markups are less sensitive to inventory turnover, but can manipulate their margins to improve profits. The margins in these budgets assumed some sales were made of popular supply cloth at only a four percent mark up. Avoiding the sales of these products would increase the margins of the small retailers from 20.25% to 23.6%, and would increase profits by 26% before taxes. Because of the small number of laborers in the smallest firms, dropping one laborer would give a big increase in profits, of 41 percent. Many of the small firms have already taken this step by using unpaid family labor.

TABLE 4.23

Value Added in the Channels of the Subsector

(LE/Kilogram of Clothing)[1]

Function:	....TRADITIONAL... Channel A[2]	Channel B[2]	.....MODERN..... Channel C[3]	Channel D[3]
Spinning	.57	.57	.56	.57
Weaving	1.47	1.47	1.46	1.47
Wholesaling	.20	.20	-	.20
Cloth Retailing	.55	.57	-	-
Tailor[4]/RMC	-	2.69	2.88	2.63
Clothing Ret.	-	-	1.59	1.59
Total Cost to Consumer per Kg.	2.79	5.50	6.49	6.46

[1]Figures are Adjusted for losses - 5% in Cloth Retailing; 5% in home production, tailoring and RMC production (except 4% for the large RMC producer); 10% in weaving.

[2]Channel A is the cost of Home Garment Making; Channel B gives costs for a consumer using a Rural tailor

[3]Channel C is the cost to a consumer purchasing a garment produced by a Large RMC producer and no use of a Wholesaler

Channel D is the cost to a consumer purchasing a garment produced by a Medium RMC producer who uses a Wholesaler

[4]The tailoring Figure in Channel B is for the rural tailor. Using the other tailoring figures, the total delivered costs would be: Rural Dressmakers, LE 3.98; Urban Dressmakers, LE 6.62; Urban Tailors, LE 9.72

Source: Compiled by the author from Chapter 4, Section 4.3.2; Appendices 2 and 3

of the

where f

the ret

clothin

trainin

Channel

stage b

that ch

involve

many di

involv

wholes

that u

made c

A, the

utiliz

capabl

for ta

RMC pr

substa

might

the RM

4.4.4 The Total Delivered Cost of Garments in the Channels of the Subsector

Table 4.23 shows the value added per stage of production for each of the channel types. The two on the left represent the fabric channels, where final consumers purchase cloth. In channel A, the cloth goes to the retailer directly from the weaver, and is then home-fashioned into clothing. This is the cheapest channel, if the consumer's time and the training costs to become a seamstress are not taken into account. Channel B utilizes the tailor, with the particular value added for that stage being represented by the rural tailor's value added. The cost of that channel varies depending on whether a tailor or dressmaker is involved and whether they are rural or urban.

The other two channels are RMC channels, and vary according to how many distribution stages are included and the size of the RMC firm involved. In Channel C, the costs of the large RMC producer without a wholesaler are considered. The final Channel shows the costs for a firm that uses a medium RMC producer and a wholesaler. A comparison can be made concerning the total delivered cost to the consumer. After channel A, the tailoring channel is the least costly, if the rural producers are utilized. If urban tailors are utilized, then the RMC channels are capable of delivering the product at lower costs. However, the figures for tailors and dressmakers were taken from 1982, while the costs for the RMC producers were constructed for 1979 and there may have been substantial price inflation between those two years. A safer conclusion might be that the urban tailoring channel is just about as efficient as the RMC channels, and it is less costly with rural producers. The RMC

product

product

conclus

garment

certain

use of

wholesa

tailor

their p

reviewe

analysi

were ar

product

product

income

tradit

produc

for pr

ratio

budget

integr

the bu

production is currently far below its potential to deliver inexpensive products, but some of the better firms are probably earning rents. These conclusions will also depend on the product lines compared.

To see the final delivered costs to the consumer, the wholesaling, garment making, and retailing stages must all be considered, since certain firms will be more efficient at one stage but will require the use of another stage to exist. Thus the large RMC firm can "skip" the wholesaling function, but must use clothing retailing. Similarly, if the tailor and dressmaker could somehow "skip" the cloth retailing stage, their products would be cheaper. A suggestion to help them do this is reviewed in Chapter 8.

4.5 Summary

This chapter has presented the results from the basic economic analysis done during the research. First, several dimensions of demand were analyzed, which included the relative proportions of different products sold in the subsector, the sales of tailors and dressmakers by product line, and estimates of quantities demanded as population and incomes change. The major conclusions were that the subsector is still traditional, that tailors and dressmakers are dependent on fairly narrow product lines, and that an elasticity of 1.25 is a good measure to use for projecting demand.

In the second part of the chapter financial budgets and elementary ratio analysis were presented for all firm-groups. The results of these budgets were further used to analyze the incentives for vertical integration, the potential for expansion by different firm-groups, and the build up of costs through the different channels in the subsector.

subsec

was th

compar

compar

each s

are di

implic

interv

reache

observ

autho

than

condu

firms

attem

CHAPTER 5

COORDINATION ISSUES IN THE EGYPTIAN TEXTILE SUBSECTOR

5.1 Introduction

In this chapter the traditional and modern systems of the subsector are analyzed with respect to the issues of coordination, which was the second comparison outlined in the methodology. Most of the comparison is between the modern and traditional systems, with comparisons between channels within each system done as necessary. For each system, the techniques used for discovering and influencing demand are discussed, followed by a discussion of the techniques and implications of the mechanisms used to coordinate supply.

The chapter begins with a discussion of the sample of firms interviewed beyond the MSU Phase II survey. Most of the conclusions reached in this chapter are based on these interviews and also on observations and interviews with the tailors and dressmakers done by the author during the Phase II survey.

5.1.1 The Subsector Interviews Outside the Phase II Survey

To learn about the other functions in the textile subsector, more than 20 additional interviews with firms and government agencies were conducted. The preferred sample would have been to find a list of all firms in the industry and to take a random sample by size of firm. An attempt was made to get lists of retail and wholesale firms from the

Trade
clothi
Egypti
Indust
contac
governm

"cold"
Commer
there
prospe
or bec
prospe
retail
consid
the "p
larger

interv
well-d
interv
unders
that

each
were
inter
quali

Trade Registry and other Ministries. In addition, lists of ready-made clothing (RMC) firms and weavers were solicited from the Federation of Egyptian Industries (FEI) and from the Government Organzation for Industry (GOFI.) A list was provided by FEI and several firms were contacted from it, but it was impossible to get a list from the government agencies in the time allotted for this extra research.

Therefore, the sample was created by walking into establishments "cold" and by contacts from associates, the FEI and the Chamber of Commerce. While the firms who were interviewed were not chosen randomly, there were no particular biases implied except that they were often prosperous firms, either because the researcher's contacts were wealthy, or because those who knew the FEI and the Chamber of Commerce were prosperous, or because most of the walk-in discussions were with retailing firms in central Cairo. Nonetheless, there was still a considerable amount of diversity in the sample and it is not clear how the "prosperity" of the firms would make them atypical of the other larger firms in the subsector.

The distribution by type of function and size for the 20 firms interviewed is shown in Table 5.1. The firms interviewed were well-distributed across the major functions, with a slightly larger group interviewed in the RMC function. This latter fact reflects the desire to understand the competition of the tailor and dressmaker and also the fact that many retailers had associated RMC operations.

Table 5.1 also shows that the number of interviews conducted for each function is higher than the number of firms interviewed because they were so extensively and variously integrated. Thus, while 20 firms were interviewed, 29 examples of functions were included. However, the quality of each interview differed substantially in the information

given, an

function.

Funct

Total

Sourc

Th

shown in

medium w

importan

to reall

number o

a basic

values o

practice

the econ

presente

Th

is summa

given, and in the amount of time and information devoted to each function.

TABLE 5.1

Number of Subsector Interviews
By Function and Size of Firm
Egypt, 1982

(No. of Interviews)

Function:	Firm Size			
	Small	Medium	Large	Total
Weaving	1	1	3	5
Wholesaling	3	x	3	6
RMC	4	5	2	11
Retailing	2	4	1	7
Total	10	10	9	29

Sources: Subsector Interviews, MSU Rural Non-Farm Employment Project

The interviews a·so covered a good range of firm sizes, again shown in Table 5.1. Perhaps the most deficient coverage was of the medium weavers, who were not interviewed nearly enough given their importance. Also, in none of the categories were there enough interviews to really understand the diversity within a group. Despite the limited number of interviews, enough discussion and observation occurred to give a basic picture of the operating practices of the firms and approximate values of the economic variables. The results of studying the operating practices are summarized in this chapter, while what was learned about the economic values was used in the Appendices to construct the budgets presented in Chapter 4.

The varieties of vertical integration found in the sampled firms is summarized in Table 5.2. It shows that the diversity of relationships

in the weaving industry is large. Only two of the weaving firms were initially interviewed because they were weavers; the others were found while looking at firms who did other functions. Also there is a pronounced incidence of RMC/retailing integration. There seems to be some rationale to these patterns, which will be discussed at the end of this chapter and in Chapter 7.

TABLE 5.2

The Vertical Integration of Firms
in the Subsector Interviews
By Functions Integrated and Size of Firm

Egypt, 1982

(No. of Interviews)

Functions Integrated:	Firm Size			
	Small	Medium	Large	Total
Weaving/Wholesaling	-	-	2	2
Weaving/Retailing	-	1	-	1
Weaving/RMC	-	1	-	1
Retailing/RMC	1	2	1	4
Wholesaling/RMC	-	-	1	1

Source: Subsector Interviews, MSU Rural Non-Farm Employment Project

5.2 Coordination Issues: A Restatement

In a well-coordinated subsector, costs are controlled and needed information moves from one function to other relevant functions. That information includes an assessment of consumer preferences and communication between functions about expectations of needed capacity, the details of specifications of products and the impact of innovations.

Internal reductions in costs occur when economies of size are

achieve

correct

firms i

provisi

has ind

positio

can rec

with ex

functio

contra

betwee

differ

them a

main p

demand

accomo

other

produc

betwee

all of

Chapte

with

achieved and risk is reduced because firms in other functions communicate correct information. Transactions costs can be reduced if the sizes of firms in different functions are appropriate to achieve minimum cost provision of adequate variety. Risk can also be reduced if the system has industries or firms as points of control that are in the best position to make decisions. Adequate communications about expectations can reduce the costs of overbuilding, duplication and losses associated with excess capacity.

The alternative mechanisms used to coordinate the different functions in a channel are markets, vertical integration, a variety of contractual arrangements, and the standard operating procedures existing between the different participants. Each of these mechanisms have different strengths and weaknesses depending on the participants using them and the character of the product and transaction involved.

The consumer's need for variety at a reasonable cost creates the main problems in coordination. On one hand, many small retailing firms demand small quantities but want a relatively large variety of cloth to accomodate a variety of human shapes, sizes, and preferences. On the other hand, weavers need to get relatively large orders to lower production costs through the length of run, resulting in a tension between the need for variety and the need to reduce cost. Furthermore, all of this must be done in real world conditions of uncertainty.

5.3. Coordination in the Traditional System.

The traditional system's essential features were discussed in Chapter 3: a prevalence of small firms in weaving and cloth retailing, with the making-up function done either at home or by tailors (Chapter 3,

Section 3.3.) The only major variation occurs if the making-up is done by a very small RMC producer-retailer, who was perhaps originally a tailor who included a retailing function explicitly in his operation. (In the following discussions the term "tailors" will be used to denote both tailors and dressmakers, unless there is a meaningful difference between the two groups, when both terms will be used.)

5.3.1 Influencing Demand in the Traditional System

5.3.1.1 The Consumer's Preferences. "Coordination" in part means producing products that meet the needs and desires of the consumer as well as possible, given the current resources and industrial structure of the subsector. Determining the consumer's preferences was not part of this research project, but some comments and reflections can be offered. First, most consumers are poor and need cheap clothing to simply have enough clothes to wear. The middle-income rural family was able to purchase about four or five pieces of clothing per person per year, without purchasing any major items such as a suit or high priced gelebeya. One of these latter items would exhaust the entire budget of the family. Nonetheless, most families would try to have some good clothing for important events, thus constraining an already tight budget even more. (See Chapter 4, Section 4.2.4.)

In addition to making their clothing budget go a long way, most consumers want variety in clothing, a feature of textile consumption for many centuries (Braudel, 1981.) The variety is in terms of colors and styles and, with the rise of the modern system, in terms of branded products. Finally, the consumer also might like a quick and clean transaction, a preference that will probably increase with income.

consum

budget

to get

money

are al

dressm

good g

adjust

does c

seen a

by con

since

in the

to tak

are re

RMC pr

about

They m

relati

tailor

becaus

proble

indust

produc

The traditional system offers the greatest possibility for consumers in Egypt to maximize the quantity of clothing from a given budget. They are able to choose very cheap cloth and do home fashioning to get the greatest quantity from their budget; or they can spend more money on cloth and do home fashioning; or they can utilize tailors. They are also able to add variety through a discussion with the tailor or dressmaker, although this was not done often if casual observation is a good guide.

The modern system does not allow for as much flexibility in adjusting quantity for a given budget as the traditional system, but it does cater to other preferences of the consumer. More variety can be seen and tried on before purchasing, so that less imagination is required by consumers. Also, the time involved in the transaction is reduced since clothes can be purchased in one stop rather than the three required in the traditional system. (One stop is necessary for buying cloth, one to take it to the tailor, and one to pick it up, assuming no alterations are required.)

If a consumer is accustomed to using a tailor, the transition to RMC products may be somewhat trying at first. Consumers need to learn about sizes and how to choose styles by observing packaged products. They may become frustrated and move away from RMC products when a relatively expensive piece of clothing does not fit correctly. One tailor claimed that he did not fear the transition to RMC products because people would always have to come to him for adjustments! This problem will also be exacerbated by the generally poor quality in the RMC industry at this time.

When a consumer uses a tailor, she is willing to wait for her product, a fact which is key in the conservative orientation of the

tradit

produc

each o

consum

set ch

increa

final

influe

Since

consum

tailor

could

price

are di

by the

owners

prese

that

is su

the a

numbe

walk-

impor

of cl

traditional system. With the rise of the modern system, she demands RMC products immediately, perhaps with harmful external consequences. Thus, each of these systems offer certain advantages to the consumer. The consumer's preferences for the two systems will change as her opportunity set changes -- as her income increases, as herdemand for variety increases, and as her affinity for brand name products increases.

5.3.1.2 Advertising and Coordinating Demand. The producers in the final stages of production can coordinate existing supplies by influencing demand so that it is predictable and fits the supplies. Since the firms in the final stages have the most contact with the final consumer, influencing demand is largely the domain of cloth retailers and tailors in the traditional system. While not observed, other stages could offer incentives to influence these firms to advertise or offer price discounts. The retailer's methods are similar in both systems, and are discussed in a later section.

Some data was collected regarding the advertising mechanisms used by the tailors and dressmakers. In Table 5.3, the responses of firm owners to the question asking "How did customers hear about you" is presented. All producers made use of relatives. It is not surprising that rural dressmakers relied mainly on their family for contacts, but it is surprising that the urban tailors did as well. (This figure is not the amount of production referred by the particular method, but the number of firms using that technique.) Also, there are not very many walk-ins, perhaps indicating that knowing the quality of the tailor is important and that one does not trust an unknown with an expensive piece of cloth.

TABLE 5.3

How Customers Heard About the Sampled
Tailors and Dressmakers

By Rural and Urban Producers

Egypt, 1982

(% of Respondents with Affirmative Answers)[1]

	Dressmakers		Tailors	
How Did Customers Hear About You?	Rural	Urban	Rural	Urban
Through Relatives	92	67	69	71
Walked In	8	33	23	7
Through Advertising	-	100	8	29
Don't Know How	17	33	38	50
Number of Respondents	12	3	13	14

[1]Multiple Answers Allowed

Source: MSU Survey, Special Questionnaire

higher

practi

is tha

there

extens

used,

to the

centra

of the

since

other

raw m

and c

whole

small

retai

point

minim

produ

contr

the c

The amount of advertising, probably in local newspapers, was higher than expected for the urban producers, and, predictably, it was practically non-existent for rural producers.

The conclusion about influencing demand in the traditional system is that there are passive efforts at most. Varieties stay the same, so there is not the enticement of fashion, and advertising is not extensively used. Perhaps the main effort is in the pricing tactics used, which involve manipulation to improve profits but also to respond to the individual characteristics of the consumer (See Section 5.3.2.2.)

5.3.2 Coordinating Supply in the Traditional System

The following sections discuss the role of the wholesaler as a central coordinating entity in the traditional system. Then the nature of the transaction between the tailor and the final consumer is examined, since it has several distinct coordinating features. Finally, several other sections discuss the mechanisms used to coordinate the supply of raw materials across functions and to coordinate the system as it grows and changes.

5.3.2.1 The Wholesaler's Role in Coordination. The need for the wholesaler arises from the need to get low-cost production from fairly small weavers, while at the same time giving adequate variety to small retailers. An illustration based on the data from Chapter 4 depicts this point. The smallest weavers can produce about 20 varieties per year near minimum cost. (Their output is 44,000 meters, and a reasonable production run to achieve low costs is about 2,000 meters or more.) In contrast the small retailers may require around 1,650 bolts of cloth over the course of the year. Even with duplication of cloth as inventories

turn ov

many sm

wholesa

cost, r

variety

require

aggrega

at a r

the fi

how th

that t

wholes

larger

reduce

at mi

Alter

subco

view

about

marke

exper

whole

produ

thus

turn over, they would require 300-500 varieties. Thus they must contact many small weavers to get their inventory.

Even the medium and large weavers can in many cases profitably use wholesalers, since they can produce about 300 and 1,000 varieties at low cost, respectively. However, as the weavers are able to produce enough variety to satisfy small retailers, they produce much more quantity than required. Therefore, selling the product again requires a wholesaler to aggregate the small firms' orders.

The wholesaler, then, has a key role in providing adequate variety at a reasonable price as long as there are small firms in retailing and the final good is cloth. There also appear to be several differences in how the wholesaler functions depending on its size. Chapter 4 made clear that there are economies of size in the wholesaling function, so the wholesaler could perform its function at lower cost if the industry had larger firms. Also, a larger wholesaler could help the small weaver reduce costs by giving him larger orders and thereby allowing production at minimum cost and purchases of inputs at reasonable discounts. Alternatively, the wholesaler might purchase yarn at discounts and subcontract the production to the small weaving firms.

Given the relatively large volume, the wholesaler has a better view of total demand in the system, and he can make the best decision about the composition of production and how to react to trends in the market. Also, this view makes the wholesaler most able to take risks and experiment with changing patterns and yarns. For example, several large wholesalers indicated that they jobbed cloth -- they coordinated the production and printing and dyeing of large runs of cloth -- and were thus deciding what the system needed and coordinating it.

Up to a point, the larger the wholesaler the better they will be

able t

Chapt

large

probal

It ta

is ne

inven

size

depar

large

The t

recon

coord

consu

and q

discu

the s

witne

impli

secti

tradi

purch

the t

garme

the c

produ

able to undertake this coordination activity. If the figures reported in Chapter 4 are accurate, there are labor economies of size, so that a larger wholesaler can much more effectively use labor. There is also probably relatively less inventory that needs to be held sales increase. It takes a minimum variety to achieve one sale, but only a finite variety is needed to make any sale, and the larger the firm, the closer the inventory held may approach the optimum "portfolio," both in terms of size and in terms of the varieties offered. The size of individual departments in a department store suggest that this level is not too large.

5.3.2.2 The Transaction between the Tailor and the Final Consumer. The transaction between the tailor and the final consumer also helps to reconcile several of the fundamental tensions in the subsector. The coordination mechanisms in the transaction between the tailor and consumer that are analyzed include the methods of determining quantity and quality, how prices are formed, and the terms of trade. The discussion in this section is based on an examination of the details of the standard operating procedures, which was done by the author witnessing this transaction many times. The resulting performance implications of that transaction are then discussed in a following section.

5.3.2.2.1 The Features of the Tailor-Consumer Transaction. In the traditional system, a customer enters the tailor's shop having already purchased the quality and pattern of cloth he desires and negotiates with the tailor about the specifications of style, size, and price of the garment. Thus, several decisions regarding the quantity and quality of the garment are made by the customers prior to the beginning of production. Also, the timing of production is driven by demand as well

since

and s

tailo

certa

produ

betwe

excep

somet

may h

Few

limi

(Thi

pric

loca

the

sepa

kulf

that

gela

onto

the

"ex

han

goi

thr

since the consumers tend to demand greater production during the feasts and seasonal high points, and they purchase cloth and take it to the tailor near those peak periods. Tailors and dressmakers specialize in certain groups of products, so that consumers are directed to different producers as their needs vary (See Chapter 4, Table A4.3 and A4.4.)

The price of the garment is settled upon through negotiation between the consumer and the tailor. Table 5.4 shows that, with a few exceptions, many of the tailors and dressmakers bargain at least sometimes. The high percentage shown of urban tailors who never bargain may be explained by the fact that some urban products had price controls. Few rural dressmakers bargain appear to bargain because the market is limited, and that may require good contacts and unalienated customers. (This data is somewhat contradicted by the Phase II survey, in which the prices for the products of each tailor and for tailors in particular locations tended to be fairly stable. Perhaps simply trying to maintain the going price requires substantial negotiation.)

The finishing pieces used in the garments are often negotiated separately from the base price of the garment. These pieces are usually kulfa in the traditional garments, which is a "piping" on the garment that corresponds to lace ribbon in women's dresses, while for men's gelabeyas it is a silk or synthetic silk braided ribbon that is sewn flat onto the garment. As Table 5.5 shows, adding the cost of the kulfa to the base price of the garment was the only pricing method generally used.

The tailor knows that the customer can ask for any amount of "extra" trim and it will not damage his profit margin. On the other hand, the customer can identify exactly what his special preferences are going to cost. The costs of consumer preferences are thus made clear through this detailed negotiation and offers advantages to both parties.

TABLE 5.4

Extent of Bargaining By Tailors and Dressmakers

By Rural and Urban Producers

Egypt, 1982

(% of Respondents with Affirmative Answers)

	Dressmakers		Tailors	
Frequency of Bargaining with Customers	Rural	Urban	Rural	Urban
Always	17	14	38	12
Usually	9	15	6	6
Sometimes	13	43	18	35
Never	61	28	6	47
Total	100	100	100	100
Number of Respondents	23	7	16	17

Source: MSU Survey, Special Questionnaire

TABLE 5.5

Pricing of Finishing Pieces by Tailors and Dressmakers
By Rural and Urban Producers

Egypt, 1982

(% of Respondents with Affirmative Answers)

	Dressmakers		Tailors	
How are Finishing Pieces Priced?	Rural	Urban	Rural	Urban
Included in Base Price	5	-	2	13
Added to Base Price	77	57	81	75
Customer Supplies Them	53	-	-	-
All of the Above	13	43	6	-
No Finishing Pieces Used	-	-	-	12
Total	100	100	100	100
Number of Respondents	22	7	16	16

Source: MSU Survey, Special Questionnaire

lear

char

resp

is h

of t

pric

occu

in t

stra

prod

pay

it w

elas

barg

most

dres

The

lose

cons

prod

betw

the

paym

capi

cons

Some aspects of the tailor's strategy in this negotiation were learned from the special questionnaire. In Table 5.6, the reasons for charging different prices to consumers are presented. The possible responses included differences in the production process when the cloth is harder to work or requires extra sewing and differences in the ability of the customers to pay. Almost all of the producers charged different prices for all reasons, implying that a fairly detailed discussion occurred for some transactions. While this did not come through clearly in the Phase II data, these time- and location-specific pricing strategies may add considerably to the profits of the producer and also produce more equitable access to clothing services since poorer consumers pay less for the product.

The tailors were also asked why they did not raise prices, whether it was due to the consumer's knowledge of prices, the perceived price elasticity of demand, or whether it just seemed to be the outcome of the bargaining process. The consumer's knowledge of prices was the reason most producers did not raise price. The main outlier is the urban dressmaker, which may reflect a small sample size as much as anything. The impression left is of a competitive market where the producers will lose many customers if they raise prices above the going rate. The consumer appears to be fickle, at least through the eyes of the producers.

Two aspects of the terms of trade that accompany the transaction between the tailor and the final consumer are noteworthy. The first is the provision of cloth by the consumer, so that, in effect, a partial payment is made in advance. This procedure reduces the tailor's working capital needs and also provides a form of credit reference because the consumer has shown that he can at least afford the cloth.

TABLE 5.6

Reasons Different Prices are Charged
By Tailors and Dressmakers

For Rural and Urban Producers

Egypt, 1982

(% of Respondents with Affirmative Answers)[1]

	Dressmakers		Tailors	
Do you Charge Different Prices to Customers Because:	Rural	Urban	Rural	Urban
The Cloth is Harder To Handle	76	100	94	86
The Cloth Requires Extra Sewing	62	86	69	57
The Customer is Wealthier	67	71	69	50
Number of Respondents	21	7	16	14

[1]Multiple Answers Allowed

Source: MSU Survey, Special Questionnaire

garm

tail

tail

to t

unti

pers

some

part

pref

also

The

reas

coor

labo

prod

garm

exte

arti

prefe

finis

consu

enabl

margi

affor

as we

The payment for the tailoring services is usually made when the garment is completed. The consumer thereby has some leverage since the tailor must perform adequately before receiving payment. Also, the tailor can, and apparently quite often does, offer extended payment terms to the consumer, partly because he retains possession of the garment until the consumer can pay. Knowing the customer's financial and personal situation allows him to extend terms when it is necessary (and sometimes inevitable.) Through this mechanism, risk is spread across participants, and a bilateral balance exists that allows the consumer's preferences to be taken into account but the implications of costs are also imposed on the consumer.

5.3.2.2.2 Coordination Aspects of the Tailor-Consumer Transaction. The consumer wants a substantial amount of variety but also needs reasonable costs. Several features of the tailor-consumer transaction coordinate these diverse needs in the context of a resource-scarce and labor-surplus economy. (See Chapter 6 for this context.) First, production on demand means quite clearly that the aggregate quantities of garments demanded and supplied match. In addition, because of the extended negotiation, the qualities demanded by the consumer are articulated well and the consumer has some leverage to make sure his preferences are taken into account by paying after production is finished. Because of the price discrimination based on qualities of the consumer and the separate pricing of finishing pieces, the transaction enables the tailors to increase profits, the consumers to know the marginal costs of their preferences and poorer consumers to be able to afford some tailoring services.

Supply is coordinated through several aspects of this transaction as well. The tailors are dispersed and they exist in appropriate numbers

to s

to b

prob

tail

qual

tran

pric

in p

be m

is k

thro

peri

unde

char

mach

poss

conn

exis

cons

5.3.

are

syst

abl

prep

to service a particular locality. Within these localities prices appear to be transparent and information about the quality of the tailor is probably sufficient. In this way the markets coordinate the supply of tailors relative to the quantity demanded and to some extent to the quality demanded (See Section 5.3.5.) Furthermore, the nature of the transaction helps to reduce the risk of non-payment so that tailors' prices require less of a risk premium. The transaction procedure stands in place of raising prices to absorb risk.

Finally, some of the negative aspects of this relationship should be mentioned. Because the production is not undertaken until the demand is known, and the demands are fairly seasonal, there is excess capacity throughout most of the year and probably some shortages during peak periods. However, this problem is mitigated by the low costs of underutilization of capacity. Also, despite the good communication about characteristics demanded, most producers do not have access to specialty machines and bulk cutting of cloth, so there are limitations on the possible variety and some higher costs as a result. In addition, the connection between the clothing producer and the cloth producer does not exist, so feedback from the tailor's extensive discussions with the consumer do not reach the lower part of the subsector.

5.3.3 Other Observations on Coordinating Supply in the Traditional System

The basic problems of providing variety and low-cost production are addressed also through several additional features of the traditional system. Besides receiving orders from wholesalers, the small weaver is able to rely on traditional patterns and varieties, so they can preprogram their production to anticipate orders for reliable products.

For
as b
"tra
fewe
tota

prim
eith
reta
few
not
they
weav
whol
powe
reta
mode
deve

coor
need
the
the
make
whol
thou
exis
prob

For instance, a weaver may always sell a certain percentage of production as black, low-cost cotton cloth. This production can be planned "traditionally." Stable varieties thus permit advance production with fewer inventory losses when most of the industry has a poor view of the total market.

Another important feature of the system is that it is coordinated primarily through markets, and there appear to be few incentives for either longer term contracts or vertical integration. The weavers and retailers are too small to integrate into the wholesaling stage and have few technical or transactions reasons to do so. The wholesalers would not integrate while the average size of the adjacent firms is small since they gain little from integrating with a much smaller entity. A small weaver may want a long-term contract with a wholesaler, but the wholesaler would prefer to be able to pick and choose firms and has the power to do so if they are larger and deal with many weavers and retailers. (As the weaving firms get larger -- in the transition to the modern system -- the incentives grow for the wholesalers to integrate or develop long-term relationships with larger weavers.)

The existence of small firms also poses another problem for coordination in the subsector, one which is not handled very well. The need for a wholesaler means that the cloth must be handled twice through the distribution stages, in effect adding a layer of cost. Also, because the decision to purchase cloth is made separately from the decision to make clothing, there are extra losses because the cloth is cut first into wholesale-sized bolts, and then into individual-sized bolts without much thought given to reducing the cloth through the system. Thus, the existence of small firms in the traditional system appears to cause problems in coordinating raw material usage to minimize its requirements

throu

impor

less

many

toler

garme

the s

accep

5

face

adap

outl

effe

the

than

bene

larg

redu

Also

larg

ente

char

throughout the system.

The style of clothing produced by tailors and dressmakers is an important instance of slack in the system which permits a tolerance for less than optimal performance. Clothes are extremely loose-fitting and many are worn underneath other layers, so poor tailoring can be tolerated. It is possible to resew without changing the look of the garment. Also, loose-fitting garments do not put stress on the cloth or the stitches, so simple single needle stitching and inexpensive cloth is acceptable in the production of these products.

5.3.4 Some Dynamic Issues of Coordination in the Traditional System

While the system is termed "traditional," it still evolves and faces a set of changing demands and supplies that require some adaptation. That adaptation needs to be coordinated. This section outlines the forces of change and how coordination of that change is effected and where it breaks down.

5.3.4.1 Coordinating Growth and Change in Wholesaling. Many of the weavers and wholesalers have already achieved a larger average size than is associated with the "pure" traditional system. A variety of benefits occur as the wholesaler grows, including reduced costs through larger orders, which create internal production and overhead cost reductions for weavers and reductions in the costs of raw materials. Also, the amount of overcapacity in weaving may be reduced because of the large wholesaler's perspective on the market.

These factors increase the tendency of wholesalers and weavers to enter into long-term informal contracts as the firm sizes grow, thus changing the nature of the coordination mechanisms between those two

firm-

long-

tradi

this

the h

and

pres

have

garm

more

quan

tail

The

For

cust

feat

lim

cap

con

gro

anc

dif

mak

Thi

dre

firm-groups. There is little incentive for wholesalers to enter into long-term contracts when both of the entities are small, although tradition may make it seem that long-term contracts exist. Because of this interdependence firms must communicate and trust each other to gain the benefits described above. This encourages more long-term contracts, and in some cases vertical integration.

5.3.4.2 Coordinating Growth and Change in Tailoring. Demand has presumably grown and contracted over the years. Certainly tailors have have attempted to increase their production and enter the ready-made garment market. Using several questions in the special questionnaire and more general speculations, the adaptabliity of the tailor to change in quantity demanded and in costs of inputs is assessed in this section.

First, a long-answer question was asked about the expectations of tailors and dressmakers, and they gave two basically different answers. The first group of producers was comfortable with the current situation. For this group, the profit was seen as adequate for the work and the customer base was perceived as solid and, by implication, a permanent feature. The second group saw only constraints. They felt there was limited demand in their town, and, in any case, they did not have the capacity or working capital to produce for their "own account." The conclusion is that the individual producers are not particularly growth-oriented. They see constraints or appear satisfied.

One way of responding to competitive pressures was to work for another firm, either as a subcontractor or as an employee. The difficulties of communication and transport were cited several times as making it not worth trying to produce for another firm or go work in one. This factor made working outside the village particularly hard for dressmakers, who have many other duties in the home. The result is that

these

compe

tailo

there

22 p

that

With

resp

ente

appr

bega

beca

prob

tail

Whil

grow

gene

inc

lea

con

get

the

are

wil

these producers will move out of the subsector when they face competition.

As demand or supply pressures restrict the opportunities for tailors, many will exit the system. When opportunities increase, will there be a problem in expanding capacity? The MSU study showed that only 22 percent of tailors in the sample had fathers who were tailors, and that only 10 percent of dressmakers had mothers who were dressmakers. With regard to grandparents, the percentages were zero and five, respectively (Davies, 1984, p. 43.) The producers in general did not enter the business through family tradition, but learned by being an apprentice. Eighty percent of tailors and 61 percent of dressmakers began as trainees. An additional 16 percent of dressmakers got started because they "saw or heard from neighbors" about the business and probably learned from them, in effect as a trainee. Only 11.1 percent of tailors and 8.5 percent of dressmakers had a "long family tradition." While hardly conclusive, it does suggest that these industries might be growing and that considerable expansion can take place over several generations. This suggests that entry and exit can be fairly dynamic.

In summary, the industry has probably grown with population and income increases through a fairly simple replication of tailors who learned as apprentices. The traditional system seems to expand and contract well in response to changes in income and demand. If work loads get large, tailors will take on apprentices, who will often go out on their own after training unless the demand is so strong that the firms are able to pay better wages. If demand decreases, some of these tailors will go into other work.

5.4. Coordination in the Modern System

In the following sections the coordination mechanisms used in the modern system are presented, again focusing on demand first and then on supply. Some aspects of the traditional system are discussed in these sections as well. In the demand section, all retailers are considered together whether they are selling cloth or clothing. Also, the points of control in the modern system are presented with a comparison of the location of control in the traditional system.

5.4.1 Influencing Demand in the Modern System

In this section the mechanisms used to influence demand are discussed. These mechanisms occur mainly in the retailing industry, although some activity is undertaken by RMC producers as well. The small cloth and clothing retailers are considered together in this section because while the small cloth retailers are in the traditional system, they are often the same firm as the small clothing retailer in the modern system. Moreover, the strategies used by small retailers and the resulting coordination issues are similar whether they are selling cloth or clothing.

5.4.1.1 The Role of the Retailer. In both systems the basic coordination task for the retailers is to assess the consumer's demand and to communicate the information to other producers and distributors. A second objective is to influence consumer demand so they are enticed to buy what is in fact available to move currently existing supplies.

In the traditional system the retailer sells cloth to the final consumer and a garment is produced by a tailor or at home. The

cons

diff

mixe

cons

need

use

choi

adve

stra

infl

comp

must

they

is i

disc

ofte

sepa

appe

firm

will

rela

adap

piec

Sect

cons

consumer's preferences for cloth and clothing are thus discovered by two different firms, which are both small. In contrast, the qualities are mixed in a ready-made garment, so the clothing retailer thus sees consumer's demands for the composite product.

To discover demand, retailers use several strategies. First, they need to attract the nearby customer traffic to the store. All retailers use a mix of inventory to attract customers. In addition, they make choices about pricing practices, terms of trade, and merchandising and advertising techniques. By varying these components to create strategies, they discover consumer's preferences and also attempt to influence consumers to purchase what is available. Each of these components are discussed below.

5.4.1.1.1 The Retailer's Choice: Cloth Versus Clothing. Retailers must choose whether to stock cloth or clothing, or in what proportions if they decide to stock both. The question about which commodity to stock is important for a number of reasons. The retailer has few means of discriminating between potential cloth versus clothing buyers and so often maintains an inventory of both goods, reflecting the difficulty of separating consumers. However, in the main shopping districts there appears to be enough demand for ready-made garments so that specialized firms can be supported. Second, the mixed inventory indicates a willingness of retailers to be in either system, and presumably to adjust relative proportions as demand shifts. They are therefore passive adaptors to system changes.

About 71 percent of the quantities sold through retailers were piece goods, which go through the traditional system (See Chapter 3, Section 3.5.2.) Whatever retailers desire, they must realize that most consumers can minimize costs by home-fashioning or by using tailors to

fin

and

pur

whi

som

a s

pro

var

pro

and

tra

not

fa

of

Ce

mo

cu

st

tr

th

pr

th

ma

on

ty

finish the garment. Most sales will be for cloth rather than clothing, and firms must stock accordingly and realize that if they choose to pursue RMC sales, they are after a smaller market. A typical strategy, which was often observed, was for a retailer to sell some piece goods, some RMC products from the public sector or from large private firms, and a special line of clothing with a special label.

The retailers prefer to stock products that earn the highest profit. This entails making a complex decision and comparing several variables, such as: the mark-up versus turnover potential; the value of promotion and sales efforts; the proportions devoted to different stocks and their impact on economies of scope; and the nature of the customer traffic near the business location. Thus, what the retailers demand will not only reflect their assessment of consumer preferences, but also the fairly complex requirements associated with their business strategy, all of which is made more complicated by the existence of uncertainty. Certain strategies will make coordination easier, and others will make it more difficult.

Since the small retailer is predominant, the "sample size" of customers will be small and the variance high if the implications of statistical theory hold. Larger retailers will be able to identify trends more accurately and will probably stock an inventory that reflects the actual population better.

5.4.1.1.2 Pricing Practices in the Retailing Industry. The pricing practices of retailers are not known with great precision, except that many are familiar to consumers in the West. The retailer generally marks up the price of the garment a variable percentage. For instance, one retailer marked up shirts from 25 percent to 40 percent, while he typically marked up suits 100 percent. The range is wide, and is usually

set a

The p

litt

garm

an u

qual

than

gain

in t

if

clo

nei

the

rep

Adv

inj

for

cr

en

st

te

in

pr

me

set strategically, based on how well a particular product is selling. The prices are usually posted on each garment, so there is generally little negotiation between the consumer and the retailer.

The shirt retailer indicated it was difficult to determine why one garment could sell at a particular price and another could not, implying an uncertainty about setting relative prices to reflect different qualities. This is complicated by the fact that consumers exit rather than remain to voice their displeasure. Therefore, the information gained about the value of certain qualities is not nearly as complete as in the traditional system.

Customers can be charged the wrong price for a particular garment if they do not possess the knowledge to determine the composition of the cloth. In addition, poor printing or dyeing is not obvious because neither the customer nor the retailer can tell until it is washed; therefore, it is difficult to determine quality except by brand name or reputation of the retailer.

5.4.1.1.3 Advertising and Merchandising in the Retailing Industry. Advertising and merchandising strategies affect coordination because they influence consumers to buy what is in fact available. The extent of formal advertising is generally limited to posting sales prices and creating displays in store windows. The larger public sector stores engage in some newspaper and television advertising, but, since these stores are department stores, only some of the advertising is directed at textiles. However, any advertising that works will attract some people into the stores and will increase the number of people who see textile products.

It is logical that advertising makes economic sense only when the medium used and people reached fit the firm's output capacity. Relative

to the sizes of many retailing firms in the textile subsector, advertising in many mediums (television, radio, or a "noticeable" space in a newspaper) can reach a more than sufficient population, but it is a large cost not compatible with their output and distribution network.

The retailers themselves have preferences about where the system should be going, and use advertising to promote that image. An important goal of the public sector retailing firms may be to emulate the Western department store in their store layout and product lines. Cloth is the main item sold, but, in some of the visible "flagship" stores, mannequins with fashionable dresses are in the window. One RMC producer mentioned that the whole movement towards ready-made production was being driven by the public sector retailers. Also, two private RMC producers made remarks about the backwardness of the tailor and how tailoring was a dying system. (One of these producers also was a medium sized retailer.) This image is important because retailers will create advertising and other business strategies based on it. This in turn affects the nature of the information they pass to the rest of the system and what composition of products they demand.

The main merchandising practices are labelling and packaging the garment, which have an advertising dimension as well. For the large quantity of cloth sold as piece goods, the label is stamped or woven along the edge of the cloth. Since the large public sector and the largest private weavers are well known, these labels may indicate different levels of quality. The small and medium weavers are not known by their label. The label is simply contained on a piece of paper that shows through a clear cellophane wrapper while the bolt of cloth is in the wholesaler's shop. On the retailer's shelf the name of the company would not be evident since the wrapper has been taken off.

Impa
adap
cust
size
of t
dema
fixe
the
abl
have
impa

tra
of
the
inc
pro

Whi
sys
vie
pro
can
of
who
cor
RMC

5.4.1.1.4 Current Practices in the Retailing Industry and their Impacts on Coordination. The smaller retailers appear to be passive adaptors of whatever products are demanded since they have a small customer base and most advertising forms are not compatible with their size. The small customer base means that they face uncertainty because of the small sample and resulting larger variance in their customers' demands. Advertising is not as useful because of its relatively high fixed cost, and therefore the small retailers are less able to influence the demands of customers. This is not true for the large firms, who are able to influence demand to have it match their supplies, and who also have a more representative customer base with a smaller variance, which implies that there will be less uncertainty faced by the larger firms.

There is a great deal of uncertainty in the system due to the transition from cloth to clothing as the main product and the difficulty of interpreting consumer demand through posted price markets. This means the retailers can be influenced to provide a particular product if the incentives are right. Many RMC producers may have the resources to provide those incentives.

5.4.1.2 Demand Influences from Other Firm-Groups in the Subsector. While the retailers play an important role in the coordination of the system by influencing demand, they are often small and have a limited view of the market. They also have little ability to experiment with new products because they are small buyers of cloth or clothing and usually cannot influence the product lines of RMC producers, with the exception of the smallest producers. Therefore, weavers, RMC producers, or larger wholesalers may be in a better position to choose products that appeal to consumers and to see what has worked in the market before. The smaller RMC producers are well-matched with small retailers, so that some

small-scale experimentation exists. However, they cannot see the larger market well and therefore probably make more mistakes.

In the RMC industry, labels are used to influence demand by increasing consumer loyalty. Most small RMC producers attach labels or have insignias embroidered in shirts, dresses, and suits. However, to really develop brand loyalty may require a well-known label and production of a certain volume, since people often wear branded clothing to show others they can afford it and to create an image. On the other hand, there is clearly loyalty to tailors and dressmakers, so the truth of this observation may depend on the relative size of the market.

5.4.2 Coordinating Supply in the Modern System

The following sections discuss how the modern system handles the problems of coordinating the supply of products. First, the decline of the wholesaler as the central coordinating entity is examined. Next, the rise of the interface between the RMC producer and the weaver is considered, along with the changes in coordination mechanisms. A discussion then follows about the firms whose decisions impact heavily on the subsector. Finally, several other sections discuss the mechanisms used to vertically coordinate the supply of raw materials and to coordinate the system as it grows and changes.

5.4.2.1 The Reduced Role of the Wholesaler. In the earlier discussion of the role of the wholesaler, several examples illustrated the retailers' need for variety in small quantities and, in contrast, the weavers' need to produce relatively few varieties to achieve minimum cost. Small retailers might need ten times more variety for a given volume than the small weavers can produce at minimum production costs.

The

they

so

give

act

at

who

proc

weav

cert

dec

only

ret

dir

sys

per

rea

bes

the

mod

man

use

RMC

ris

tra

The illustrations further showed that the medium sized weavers, while they could produce adequate variety for the small retailers' needs, did so in such large quantities that they could use a wholesaler.

As weavers grow (in part based on the ability of the wholesaler to give them large enough orders to produce at low cost,) they are able to act either as a wholesaler because they can produce a substantial variety at low cost, or they can find large firms in retailing or RMC production who give them large enough orders so they can achieve low-cost production. (An extraordinary example was the relationship between one weaver and RMC producer, in which the weaver had permanently allocated certain looms to the RMC producer. The RMC producer, therefore, made decisions about what products to make, while the weaver was concerned only with production decisions.) The larger the average size of retailers and RMC producers, the more likely it is that weavers can make direct contacts with them for large orders to be produced at low cost.

Another reason small firms use wholesalers in the traditional system is to take advantage of the wholesaler's size and consequent perspective on the market. With the rise of large firms, each firm has a reasonable view of the market or is able to connect with other firms besides wholesalers to get that perspective. Thus what used to be one of the wholesaler's distinctive advantages becomes more common as the system modernizes, and the wholesaler loses as a result.

As a firm grows, it has to discuss and coordinate the purchases of many varieties of inputs, and it can save on transactions costs if it uses a small number of suppliers. This increases the dependence of ane RMC producer or retailer on several input suppliers and increases the risk of loss due to poor performance. Firms on both sides of the transaction will try to find reliable suppliers or customers, and

lon

wit

Thu

wil

the

hav

som

com

con

int

who

are

and

or

the

who

mix

a w

sub

pro

dec

qui

ple

ind

who

long-term informal contracts will increase. Furthermore, larger firms with more complicated orders and inventories will demand inputs earlier. Thus the time frame associated with the transaction will increase and will require a higher level of trust as well.

A related issue influencing the increase of long-term contracts is the rise of fashion in the modern system. The increased importance of having unique inputs to add special qualities to products may require some secrecy and certainly trust of suppliers not to sell those inputs to competitors. This is a further factor that leads towards long-term contracting. In several cases RMC or retailing firms vertically integrated into small weaving firms, apparently for these reasons.

The importance of the development of long-term contracts to the wholesaler is that, with the emergence of these contracts, the weavers are more likely to try to deal directly with RMC producers or retailers and leave out the wholesalers. Wholesalers cannot guarantee the quality or timing as well as the actual producing firm can, nor is it as easy for them to develop special styles. The improved profits from bypassing the wholesaler are additional incentives, which were discussed in Chapter 4.

5.4.2.2 The Current Situation. Currently the subsector exhibits a mixture of systems. There is a predominance of small retailers who need a wholesaler. Also, RMC products are not the major outputs of the subsector, so weavers have less opportunity to directly contact the RMC producers than if there were more firms. The private wholesaler has declined in significance, but the public sector wholesalers are still quite influential because they distribute a majority of the cloth sold as piece goods in the private sector. In addition, firms in the weaving industry are still small enough so that many find it useful to work with wholesalers.

sub
spi
of
in
and

act
who
the
req
dec
sti
seq

who
the
cha
imp

ass
dec
ass
lar
its
aff
her

Thus the wholesaler still functions in both systems, because the subsector has evolved to larger firms in the earlier functions of spinning and weaving but still remains traditional in the upper functions of retailing and garment making. However, because of economies of size in wholesaling there has been competitive pressure on the smaller firms, and the private wholesalers that remain will be larger.

Large wholesalers can use the production-on-demand method by acting as jobbers for retailers or RMC manufacturers. As a jobber, the wholesaler accepts a large order and/or unusual set of specifications and then contracts with weavers and printing and dyeing firms to produce the required product. In this manner, wholesalers concede the production decisions to those who are in a better position to make them, but they still use their contacts, capital and knowledge to coordinate the sequence of transactions.

5.4.2.3 The Changing Role of the Weaver and RMC Producer. As the wholesaler declines in importance and the system moves to RMC products, the needs of the weaver and RMC producer change. Some of the characteristics of these changes and some reflections about the implications for coordination are made in this section.

The weaving firms in the traditional system use the wholesaler to assist in determining what quantity and quality to produce. With the decline of the wholesaler, they must take more aggressive action to assess the market, which is accomplished by using several tactics. The larger weavers can preprogram some of their production with assurance of its saleability because of the view of the market their large output affords them. The smaller firms will have more randomness in orders and, hence, a more difficult time committing early to a product line.

Weavers alternatively can enter into contracts with retailers or

RMC
wea
a c
reg
was
det
dec
set
pro
rec
rel
res
or
6.4
fa
of
wi

fi
ce
ac
RM
se
at

re
tw
is

RMC producers to make use of their better sense of the market. The weaver mentioned above who allocated specific looms to an RMC producer is a case in point. In addition, this weaver also had standing orders for regular delivery of a particular quantity to another RMC producer. (He was also integrated with a large wholesaler, so he had a third method of determining market potential.) The RMC firms also need to coordinate decisions about quantity and quality. The first method is to produce a set of samples and promote them with various retailers. The RMC producers can also use the retailer's better view of the market and receive advance orders and other information through long-term relationships. One special possibility is to produce on demand by responding to tender offers put out annually by public sector retailers, or by participating in the Worker's Project (See Chapter 6, Section 6.4.1.) Some production for inventory can be done, but this involves a fair amount of risk relative to the other mechanisms and was not seen often. (Any order will require specific sizes and styles so it is risky without considerable brand recognition to produce without prior orders.)

Using sales efforts to generate demand is another way that RMC firms get feedback from the retailers and influence retailers to buy certain products as opposed to others. There were indications of an active sales effort by RMC producers directed at retailers. All sizes of RMC firms, from small producers with only a few employees to large public sector RMC producers, sent someone to retailers to peddle their products at least occasionally.

Several strengths and weaknesses exist in these procedures relative to the traditional system. In the traditional system there are two contacts with the consumer, the tailor and the cloth retailer, so it is difficult to coordinate information about preferences for cloth and

clothing together. Also, the large number of small firms in the traditional system further causes fragmented information about and control over both cloth and clothing demands. The transition to the modern system has closed this gap, so that coordinated decisions about cloth and clothing are made, but the use of posted price markets has made the information flow between the retailer and the consumer less complete.

Both weavers and garment makers, without good contacts with wholesalers or retailers, have potential problems in designing the appropriate mix of product lines because they have relatively little contact with the market. One of the principal informants in this study referred to the decline of the jobbers, which occurred when the textile firms were nationalized, and remarked that the result had been the loss of direct contact with the market by manufacturers.

Several reflections on the implications for coordination may be offered. First, it is clear that with the development of long-term contracts the markets have changed so that prices are less transparent and harder to interpret. The long-term relationships do, however, allow for the possibility of balancing risk across the different participants. One weaver remarked that he "got even" with his customers over time and thought that the level of trust was such that there were few problems. The direct connection between the weaver and the RMC producer also reduces distribution costs. Cloth is not lost because the "rests" are not left on the cloth retailer's shelf. Also, neither a wholesaler nor a cloth retailer handle the cloth, so the costs of distribution are reduced. The third observation is that the role of the retailer becomes more important. As RMC firms and weavers get large, they need better information about the market, and they come to rely on the retailer to act in their behalf. As retailers gain size and sophistication, they

als

inf

who

rel

and

of

of

oth

mar

mak

goo

mos

mar

the

ret

mar

con

cla

req

The

cla

Var

wh

Ve

also can make use of advertising and modern management techniques to influence the market.

5.4.3.4 The Points of Control in the Modern System. The wholesalers -- mainly the larger private and public ones -- have relative control in the traditional system because they have high volume and relatively large capital resources, and they also have a better view of the market than the smaller firms in the other functions. The sources of control are similar in the modern system except that they rest with other firm-groups.

The retailer in the modern system has become large and controls many resources. He is well-positioned to influence demand, and he also makes the decisions about the composition of the inventory of final goods. This characterization refers mainly to the public sector, since most of the private sector firms are still too small to act in this manner.

Currently the RMC firms also have considerable control because they are relatively large and profitable. Therefore they can encourage retailers to sell more ready-made clothing by providing concessions and market information, thus moving the subsector towards a more modern composition. Furthermore, the RMC firms are becoming large users of cloth and can influence weavers to produce the types of cloth they require, usually of a higher quality than that which the tailor uses. The growth and increasing influence of the RMC firms could "cut off" cloth from the traditional system, resulting in higher costs and less variety of cloth going to the traditional system.

The final control point in the modern system is the public sector, which uses its significant market share in most stages, its extensive vertical integration, and its administrative coordination to influence

the subsector. The public sector firms are able to influence what mix of products "should" be in the market and then coordinate that production through regulations and vertically integrated decisions. In addition to being influenced by the need to maximize profits and meet consumer demand, the public sector firms are probably influenced by political objectives, including the need to utilize local raw materials, the need to meet quantitative targets for the rationing program, and the need to employ their personnel actively.

All private sector firms face potential supply disruptions or competitive pressures from the public sector. The fact that cotton yarn is allocated to private sector weavers in apparently inadequate quantities is an example of the control that rests with the public sector (See Chapter 6, Section 6.6.3.1.) Some firms also experienced a lack of adequate attention from public sector dyers, who dyed their own cloth prior to working on contract work. Finally, the public sector retailers can introduce RMC products to the market using their knowledge and control over other functions.

5.4.3.5 Other Observations on Coordinating Supply in the Modern System. In this section three special aspects of coordination are discussed -- the role of credit, the search techniques used to find new suppliers and customers, and the use of research and development in different parts of the subsector. How each of these topics affects coordination is discussed in the following sections, along with some of the more interesting observations found during this research.

5.4.3.5.1 The Role of Credit in Coordinating the Subsector. In a subsector that functions well, credit would be advanced to firms that need it and taken from the banking system by those who are the most creditworthy; certain firms will need credit due to the functions they

per
for
acc
sta
it
mir
cre
abo

and
cap
add
by
the
Th
so

si
cl
st
sl
re

On
l,
on
in
sl

perform, and others will be "cash cows" -- they will generate extra cash for the rest of the system. Furthermore, some firms will have better access to credit due to the nature of their inventory or their size and standing with banks. The ability of the firms to transfer credit where it is needed is important to allow for adequate growth and cost minimization throughout the subsector. (This research has not focused on credit, so what is offered here are some observations and speculations about credit needs and sources of capital within the system.)

Since the storage function is generally performed by wholesalers and retailers, it would appear that they require the most working capital. In addition, these functions would need financing for additional space as the subsector grows. Some financing is also needed by RMC firms and weavers for durable assets, but Chapter 4 indicated that they generate sufficient internal funds to cover much of the investment. This would suggest that the RMC producers and the weavers might be sources of credit within the system, especially those that are larger.

Discussions revealed that some larger weavers did extend four to six month payment terms, generally to their larger customers. Smaller clients generally paid cash. The credit terms were part of the pricing strategy, since the length of the term varied with the market. During slow periods, the weavers would lengthen the payment period, in effect reducing their prices, and vice versa when demand was higher.

There was evidence of RMC producers providing credit as well. In one case, a large RMC producer gave a small retailer a credit line of LE 1,000, with a transaction fee of 1 percent based on each transaction, <u>not</u> on the length of time that it took to sell the inventory. Fast-moving inventory could be replenished up to the credit limit, while the cost of slower-moving inventory was carried by the larger producer. Also, the

ac

se

no

be

pa

su

ba

ma

pr

af

az

az

th

te

do

ab

fa

no

su

re

Su

co

at

th

actual turnover of particular products is thus known to the producer, who sells to many retailers and so learns which products move well.

Consumer credit through credit cards or charge cards is almost non-existent, although the extent of informal credit offered is not known beyond the tailor's situation. Most the consumers in the modern system pay on a cash basis, a decidedly non-modern procedure.

In addition to using funds generated by firms within the subsector, the subsector needs access to the financial resources of banks. The banks appear to act quite conservatively and make loans mainly to large firms and then usually on a short-term basis. The prevalence of the public sector means that its banking relationships affect the firms that purchase from it or sell to it. While the details are not known, it appears that most transactions with the public sector are on cash terms, or require payments in advance. That in turn means the private firms must either have good relations with banks to provide terms to their customers, or must offer tight credit terms because they do not have trade credit to use as a financing mechanism.

Therefore, the largest actors in the modern system, who should be able to offer credit to those in the subsector who most need it, are in fact net users of credit from the rest of the system. This, however, is not unlike the relationships that Sears and Roebuck has with its suppliers, in which it uses them for credit based on the power of its relationship. The public sector may be using some of the same tactics.

5.4.3.5.2 The Role of Research and Development in Coordinating the Subsector. Research and development can be an important means of coordinating the introduction of new products and processes: consumer attitudes towards products and prices are articulated back to producers through research and development; and preferences are incorporated into

products, sales techniques, or production processes based on research and market assessment.

In brief, the subsector seems to engage in little formal research. Most of the firms in the subsector are not large enough to maintain full research and development facilities, except in the public sector, and how much research they undertake is not known. There are several support organizations that assist in textile chemistry and machinery improvements, but they also work on many other products so their impact is likely to be small for textiles.

Many informal research and development procedures are used in the modern system. The larger RMC firms and weavers appear to get many ideas for cloth patterns and colors from European samples. For the firm owners with some sophistication, contacts with Europe are important sources of new styles and machinery. In addition, machinery suppliers from Germany, Switzerland, and Japan actively sought out even medium-sized firms, presumably offering updated machinery embodying new techniques. They also regularly appeared at the Cairo International Trade Fair, which included many firms from different countries.

Education in textile chemistry or engineering is another method of informally getting access to research. Often children of firm owners go to Europe for schooling, and afterwards they can understand and implement new techniques in the family business in Egypt. This is used mostly by larger and more prosperous firms with family traditions in the textile business.

Some retailers reported that they could combine ideas with small garment producers to do market research and make product innovations. Thus, coordination of styles and product lines is worked out through discussion and mutual experimentation even among the smaller producers.

Finally, in many stages the output can easily be imitated so that new products are spread throughout the system. The prevalence of similar patterns in the cloth market attests to the fact that a weaver can see and easily analyze another weaver's cloth. Garment makers can easily take apart clothes and observe how the garment was constructed. Retailers can observe what seems to be moving in competitors' shops and -- if they can find the right producers -- are able to add that product to their inventory. All of these activities were confirmed indirectly by observing the products in Cairo shops.

5.4.3.5.3 Dynamic Coordination Issues in the Modern System. In a true modern system firms have adopted a growth orientation. They face fewer barriers to expansion because they have more capital, and they face fewer lumpy investments because of their size. They may be multi-plant or multi-store operations. Retailers can add stores in a chain, and other firms can add factories that capture most economies of size. Furthermore, modern accounting practices and management approaches highlight profits and growth, so that firms, as they become large and modern, also become more growth oriented.

The modern system in Egypt is only beginning to reach this stage in most industries. Most firms appear to be single plant or store operations, with most of the large chain stores being in the public sector. Weavers with multiple weaving sheds are also mainly in the public sector. Nonetheless, the growth orientation of the modern system may be beginning to take hold.

The basic problem associated with this growth is to make sure that expansion matches the change in demand. A real possibility of over-building exists in the system, which may result in swamped markets, low prices and underutilized capacity. This is an important

co

i.

li

an

ca

ca

ca

Se

a

ca

no

ra

st

at

th

ca

of

ov

or

La

ma

op

ma

f

in

consideration because, with excess capacity, those with "staying" power, i.e., those that have previously been larger and more profitable, will likely win a battle of attrition. Also, development capital is scarce and should not be wasted.

Five points might be relevant to Egypt in a discussion of the causes of overbuilding in an industry. If the conventional units of capacity require a lumpy purchase, optimistic expectations regarding capacity needs can lead to excessive purchases of additional capacity. Second, long lead times encourage overcapacity. An extended duration of a shortage signalled by high prices may lead too many firms to add capacity. Also, with long lead times there is an excessive penalty for not having capacity available, so firms will gamble on having too much rather than not enough.

If firms need to integrate into another industry to achieve a stable source of supply, they may gain the supply but not give sufficient attention to the resulting capacity within a particular industry. If there are significant exit barriers in the form of large sunk costs, then capacity will probably remain in an industry for a relatively long period of time beyond its need. Finally, fluctuating demand leads to overbuilding in anticipation of peak periods but leaves excess capacity on average.

Some of these factors apply to the textile industries in Egypt. Long lead times will be experienced by any firm trying to use imported machinery and equipment, to build where a new infrastructure is required, or who has to go through complicated liscensing procedures. The larger manufacturing firms will tend to face more of these problems than small firms will. One special situation to watch is where RMC producers are integrating forward into retailing to assure that retailers promote RMC

products as much as possible, and may force an oversupply of RMC products on the market.

5.5 Summary

This chapter has outlined the essential features of the coordination mechanisms used in the traditional and modern systems. The essential problem is to coordinate the need for variety in the face of production economies of size, especially in weaving and garment making. The techniques used to discover consumer demand and coordinate the product supply as it moves vertically through the subsector were outlined.

The traditional system used the wholesaler as the central coordinating entity since weavers and retailers are small. Also, the tailor plays an important role in the traditional system in discovering consumer demand and making sure that production matches demand. The system is organized to be risk adverse, but has positive features regarding access to garment making by relatively poor consumers. The retailer is a small and passive actor in the traditional system, who will sell whatever seems to be demanded. Assessing the proper portions of different inventories is difficult for them, however.

In the modern system, RMC firms often deal directly with weavers and are able to achieve economies of production runs through large orders. Larger and active retailers in the modern system are able to assess and influence demand, in contrast to the more passive role in the traditional system.

The nature of growth and change and how it is coordinated in each system was also analyzed. The traditional system matches quantities

fairly well because it can adjust incrementally to changes in demand. The modern system may have several tendencies toward overcapacity and excess production. Finally, the roles of research and development and finance were discussed as they affected coordination, and some of the issues in those areas were outlined.

CHAPTER 6

THE ENVIRONMENT OF THE SUBSECTOR

6.1 Introduction

The environment of a subsector differentially imposes constraints on and offers opportunities to the firm-groups in the subsector. In turn, the firm-groups perform in ways that either contribute to the solution of problems in the environment or exacerbate them. Good performance by the subsector should be positively reinforced by actions in the environment, while poor performance should result in negative actions. Thus it is important to know the basic characteristics of the environment, the major problems experienced by actors in the environment, and the ways that the environment influences the subsector.

This chapter is broken into two parts. The first examines the characteristics of the environment and its main problems as they affect the textile subsector, and the second identifies the important regulations and support groups in the environment and their impact on the subsector.

6.2 Characteristics of the Environment and Major Issues Affecting the Subsector

The environment affects the subsector in several ways, which are discussed below: through the resource endowment of Egypt, several historical episodes and their enduring consequences, the performance of

the macroeconomy, and the government's impact on the economy. The performance of the macroeconomy is evaluated in terms of growth, employment generation and exports, while the government's impact on the economy is assessed in terms of its use of savings, its role in the production of commodities and its financial position. Prior to these discussions, the major issues in the environment are discussed to give a summary of and introduction to the following subsections.

6.2.1 Major Development Issues in the Environment of the Subsector

Like many lower middle income developing countries, Egypt is trying to make a transition from an economy dominated by agriculture to one with a modern industrial dynamic. That transition is complicated by several factors that increase its uncertainty, and it is made more difficult by several resource issues and historical factors.

Egypt is a lower middle income country by the World Bank definition, with the following basic characteristics: an income per capita of US $720.00, a life expectancy currently at 60 years, an adult literacy rate of 44 percent in 1977, and an access by 46 percent of the population to electricity in 1976 (World Bank, 1986; World Bank, 1983.) Real economic growth per capita has been nearly two percent or more for many years. Eighty-eight percent of children were in primary school in 1983, so literacy should improve over time. Improving access to electricity is a major developmental goal which should succeed because of the existence of the Aswan Dam. Therefore, many of the trends are in a positive direction.

Underneath these statistics are several disturbing trends. A persistently high population growth rate exists, and that means the

economy must grow more quickly to improve per capita income. During the 1970s the revenues gained from tourism, Suez Canal operations, the remittances of workers in the Gulf States and petroleum sales fueled the economy (The "Big Four" Sources of Growth), and real incomes increased quickly. These sources of growth appear to be exogenous and not related to internally generated and sustainable sources. They may be reversing quickly. At least it is clear that the gains from these sources have peaked while the need for income growth keeps rising.

There are other issues related to the population growth rate as well. Only 4 percent of the land is arable in Egypt, and that 4 percent is where the bulk of the growing population live and work. This has quite clearly created a scarcity of agricultural land. Also, the increasing population has resulted in an even greater increase in urbanization. The conversion of agricultural land to urban uses was between 30,000 - 40,000 acres per year during the 1970s, out of a total cropland of about six million acres (Parker, 1980, p. 28-29.) Under adverse scenerios this might rise to about 100,000 acres per year (Parker, 1980, p. 33.) At the latter rate all cropland in Egypt would be lost within 60 years! Also, it is not clear that these figures include the expansion of rural villages as populations grow.

A second issue is that the growing population demands more food. Even though the productivity of agriculture has grown, the need to import food has increased because the population is too large for the existing agricultural base. Also, much cropland is lost to urbanization and the forced growth of cotton consumes much of the available land. As a result, Egypt is now the fourth largest importer of grains in the world, following the large or prosperous countries of China, Japan, and the USSR (World Bank, 1986, p. 190-191.)

The need to import large quantities of food means that less foreign exchange is available for purchasing imported capital goods for development. Exports were high during the latter 1970s because of the "Big Four" sources of growth mentioned above, and foreign exchange was adequate (Bruton, 1981, pp. 13-15.) The Gordian knot is that these exports are decreasing just when their need is increasing. Therefore, a major goal must be to earn enough foreign exchange to import the capital needed to assist the transition to a dynamic industrial economy. Finding exportable products should be a major concern in the environment of the textile subsector.

The transition to an industrial economy is further constrained by a large government deficit which limits the amount of investment that can go into development. Egypt's geopolitical position has required large defense expenditures that contribute to the government debt and deficits. Also, socialist policies under Nasser brought into being an extensive array of subsidies on basic commodities, which have become large costs and political liabilities for subsequent regimes. Rising debts increase interest payments and the proportion of foreign exchange that is devoted to payments on it. This situation further complicates the transition by limiting foreign exchange and leaving Egypt a poor credit rating in the international markets.

6.2.2 The Natural and Human Resources in Egypt

The effects of location, resource endowments and population pressures are some of the current issues in Egypt. Some additional details of these issues are presented in the next two sections.

6.2.2.1 The Land and Natural Resources. Egypt is located in the

northeast corner of Africa bounded by Libya to the west, the Sudan to the south, the Mediterranean Sea to the north, and it includes the Sinai peninsula to the east (See Figure 6.1.) This location has given Egypt two main features: a hot and arid climate with little or no rainfall and unique political circumstances from the location near Europe and at the gateway to the Far East through the Suez Canal (Mabro, 1974, p. 45-46.) The former has allowed multiple cropping under irrigated conditions and created some tourist appeal, while the latter has caused Egypt to endure many years of foreign domination.

Egypt is a large country, about the size of Spain and France together, with 386,000 square miles. However, only 4 percent is made arable from the water of the Nile River. That 15,000 square miles provides the living, working, and agricultural land for 98 percent of the quickly growing population of Egypt (Ikram, 1980, p. 3.)

The habitable land is only several miles wide through most of the country, following the banks of the Nile. At Cairo the Nile splits into several branches and has created the Delta, where most people live and work. After the Camp David accords were negotiated between Israel and Egypt, Egypt received (or was returned?) the Sinai Peninsula, which is also arid and only able to support a very small population. Between the Sinai and the main geographical area of Egypt is the Suez Canal, which links the Mediterranean Sea to the Red Sea.

The vast amount of uncultivated and arid land has offered a few resources, mainly a variety of mineral resources (Mabro, 1974, p. 41.) By far the most significant mineral resource is petroleum, the impact of which will be shown in later sections.

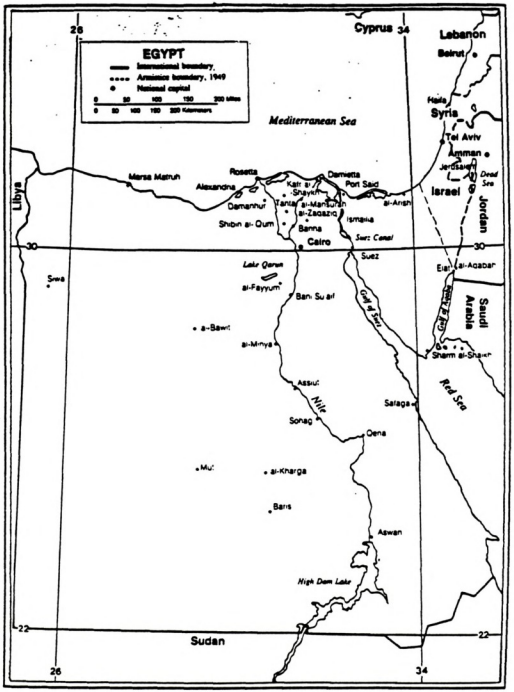

Figure 6.1

The Map of Egypt

With extensive infrastructural development, the currently uninhabitable land could support residential and commercial areas and, with irrigation and other investments, might provide land for agriculture. The debate over the viability of these options has extended over several decades, and experimental cities and land reclamation projects have been and will continue to be made, given the population pressures. Of the 6.5 million feddan of agricultural land, 900,000 has been reclaimed from the desert, but there is considerable controversy surrounding the future role of reclaimed land in agriculture (Ikram, 1980, p.169.) There have been a number of urban areas developed in the desert, but their costs are high and the demand is great if any significant part of the expanding population is going to live in the desert rather than on prime agricultural land (World Bank, 1983, p. 166-172.) The need for the new land was indicated dramatically in the earlier statistics on the loss of agricultural land.

6.2.2.2 Human Resources in Egypt. While located in Africa, Egypt's people, culture, and religion are much more akin to the Middle East and the Arab World, so much so that the most ancient Islamic university, Al-Azhar, is located in Cairo. The population is predominantly Sunni Muslim, but a significant minority, somewhere between 10 and 20 percent, are Coptic Christians. The statistics on literacy given in the previous section show a population whose human capital is increasing, but also one for which the requirements of a modern economy may be excessive at this point.

The demographic trends are familiar to observers of the developing world: a rapid population growth with an even more rapid urbanization (Ikram, 1980, p. 117.) Thus far in the 20th century the population of Egypt has increased over fourfold, which is shown in Table 6.1 under the

column labelled "Population."

TABLE 6.1

GROWTH OF POPULATION AND OF CULTIVATED AND CROPPED AREAS, 1897-1975
(thousands)

		Cultivated area		Cropped area	
Year	Population	Feddans	Per capita	Feddans	Per capita
1897	9,715	4,943	0.53	6,725	0.71
1907	11,190	5,374	0.48	7,595	0.67
1917	12,715	5,309	0.41	7,729	0.60
1927	14,178	5,544	0.39	8,522	0.61
1937	15,921	5,312	0.33	8,302	0.53
1947	18,967	5,761	0.31	9,133	0.48
1960	26,085	5,900	0.23	10,200	0.39
1966	30,076	6,000	0.20	10,400	0.34
1970	33,200	6,000[a]	0.18	10,900	0.33
1975	37,772	6,500[a]	0.17	10,800	0.29

Note: Some figures differ from census data because they do not include Bedouins.
a. Approximate.

Source: Ikram, 1980, p. 17

The population has increased since the final year shown in the Table (1975) to 44.3 million in mid-1982 (World Bank, 1984, p. 218.) The numbers in the Table represent a 2.2 percent annual compound rate of growth from 1950 to 1975. From then until 1984, the rate of growth increased to 2.6 percent per year (World Bank, 1986, p. 228.) That disturbing trend may have reversed itself as recent estimates are closer to 2.2 percent (Rosewicz, 1986, p. 40.)

Pressures on the agricultural land has also come from an increasing urban population, which has grown from 38 percent of the population in 1960 to 44 percent in 1980, and it is expected to increase to 55 percent by 2000 (World Bank, 1984, p. 218; Table 6.2.)

The future population estimates are given in Table 6.2. They are estimates from a set of projections by the United Nations, which fall slightly above the average of 16 different cases reported by the National Urban Policy Study for Egypt (PADCO, 1983, p. 107.) The range in these

TABLE 6.2

Demographic Projections, Medium Variant (000)

(in Millions)

Year	Total Population	Urban Population	Labor Force
1980	42.1	18.7	12.6
1985	47.7	22.5	14.3
1990	53.8	26.6	16.3
1995	60.3	31.4	18.6
2000	67.5	37.0	21.2

Source: PADCO, 1982

studies was from a low of 57.0 million persons in 2000 to a high of 72.6 million, with an average estimate of 64.2 million. Because almost all of the projections assumed a decreasing rate of fertility, the differences in projections were generally ascribed to differences in the estimated rate of decline. The estimates in Table 6.2 indicate that the population will increase 38 percent by the year 2000.

Returning to Table 6.1, the major issue associated with this growth in population is shown to be the continuing pressure on the land. While land reclamation has added arable land, the man-land ratios have declined consistently. The table shows both per capita cropped and cultivated areas, which have shown steep declines over this century. The cropped area is the number of feddan under crops multiplied by the number of crops planted. This amount has increased, so its ratio to population has declined relatively less than for the cultivated land. Nonetheless, the problem of providing adequate food for the population is a major

problem and continues to grow. This scenerio has been mitigated to some extent by increasing yields, but the per capita food production index still deteriorated from 100 in 1969-71 to 85 in 1980-82 (World Bank, 1984, p. 228); Mabro, 1974, p. 81.)

6.2.3 Historical Impacts on the Textile Subsector

Beginning with the reign of Mohamed Aly (1805-1848), certain aspects of Egypt's history continue to affect the textile subsector today. The years from 1800 to 1952 can be characterized as the rise and fall of a cotton export economy, and a somewhat belated decision to start industrial diversification which began in the 1930s (Mabro, 1974, p. 7-24.) These phases all took place under governments whose primary allegiance was to foreign interests.

In 1952 Gamal Abdel Nasser and the Free Officers took control of Egypt from the British occupiers, and Egypt was governed for the first time in centuries by its own people. Two major phases of economic history have occurred so far in the 30 years of independence: the socialist industrialization policies under Nasser, and the "opening " of the economy to markets and foreign trade under Anwar Sadat's Open Door Policy, Al Infitah. The main influences of each phase on the textile subsector are discussed in the following paragraphs.

The introduction of cotton during the reign of Mohamed Aly was only part of an effort "to establish a modern and diversified industrial structure in Egypt, owned entirely by the state" (Ikram, 1980, p. 11.) Much of the industrialization effort did not work. As stated by Charles Issawi and quoted by almost everyone else, "(T)he leap from a subsistance to a complex economy had failed, and instead the country had landed on

the road leading to an export-oriented economy. Egypt could now be integrated, as an agricultural unit, in the worldwide economic system" (Ikram, 1980, p. 13.)

The enduring result of the diversification attempt was that cotton and its processing and distribution became the backbone of the economy. Irrigation projects helped to increase yields, to add to the potential for multiple cropping, and to increase the arable land. The cultivated area expanded from 2.0 to 5.3 million feddan from 1821 to 1912, which is an increase of 265 percent. At the same time the average number of crops planted to a feddan each year went from one to one and one-half (Mabro, 1974, p. 8-9.) The main non-agricultural sectors that prospered were those related to cotton: its finance, transport, distribution, and elementary processing, as well as those trades and services that catered to the beneficiaries of the cotton economy (Mabro, 1974, p. 11.)

The development of the Egyptian economy beyond that of an input supplier to the textile industries of Europe was delayed because of the external allegiances of the local rulers and the political mismanagement of finances. Financing the luxury spending of the Ottoman rulers and the build-up of infrastructure led to a large external debt and ultimately to intervention by Europeans to protect their interests. From the 1880s to the 1930s, all potential developmental capital was diverted to the repayment of government debt (Ikram, 1980, p. 15.)

During the 1930s the debt repayment ended, and, additionally, windfall profits on stockpiled cotton were gained during World War I. A modern textile industry and associated banking structure was started by local businessmen with the capital gained from these events. Furthermore, political interests in industrialization increased during the 1930s, and a structure of tariffs allowed industrialization by import

su
in
fi

of
Of
Br
in
th
(I
re
th
co
cr

nu
na
in
tr
(1
23
(W
po
ri
ex

bu
Th

substitution to begin, much of which was directed to the textile industries (Ikram, 1980, p. 15.) Thus, from the 1930s, increased finances and political interest allowed industrial development to begin.

This small but evident trend towards development through policies of import substitution was taking place in Egypt at the time of the Free Officer's Revolt in July 1952, led by Gamal Abdel Nasser against the British. For the following 20 years, progressively more public intervention in the economy occurred. In 1952, economy was dominated by the private sector, with only 13 percent of GDP in the public sector (Ikram, 1980, p. 17.) The first socialist intervention was an agrarian reform that limited individual land holdings to 200 feddan. Along with this redistribution of land, an extensive system of agricultural cooperatives was set up which had monopolies over agricultural inputs and credit (Mabro, 1974, p. 4.)

The government pushed harder towards state intervention under a number of different pretexts, by introducing extensive planning and nationalizing foreign assets. Ultimately, most large scale industry went into the hands of the state. The private sector remained in "retail trade, certain transport, construction, and manufacturing activities (leather, wood, printing), and part of wholesale trade" (Ikram, 1980, p. 23.) However, even in these sectors the larger firms were nationalized (Waterbury, 1983, p. 76.) Under the name of "Arab Socialism" other policies were implemented, including comprehensive labor and tenant's rights legislation, increased health and education expenditures and an extensive system of price controls (See Section 6.2.4.4.)

Frustrations with the pace of development and the claustrophobic bureaucracy provoked some fundamental changes in economic management. The new orientation was set forth by Nasser's successor, President Sadat,

in his October Working Paper of 1973, which came at the height of his popularity after the "victory" of the 1973 war with Israel.

In Sadat's vision, modernization of the economy by 2000 was the goal, and it would require accelerated economic growth to reach it. Modernization could be achieved through an internal unity of purpose, but it also needed foreign resources and an "outward" looking posture towards foreign markets. In this vision, the public sector had performed generally well and would remain important with some shifts in focus and improvements in efficiency. Also, the private sector had faced "contradictory" policies in the past, which were to be cleared away to insure its participation. Finally, in order to get foreign participation, legislative guarantees to insure confidence were needed, and were set forth in Law 43 of 1974 and further expanded in Law 32 of 1977.

This short history of Egypt illustrates the impact of historical events on the textile subsector and its operating environment. The textile subsector is large and important due to a comparative advantage, but also due to the need for cotton in the textile mills of Europe. In addition, the extensive regulation from Nasser's era is still a major influence. The prevalence of the public sector is important, as are the preferences offered to foreign investment. Several regulations enduring from the Socialist era have an impact on the evolution of the subsector, especially the price controls on certain commodities and the rent control portion of the tenant's rights legislation. (See Section 6.3.) Finally, the debt repayment and the five wars in the 20th century have left an eroding infrastructure and a scarcity of development capital that still characterizes the environment of the textile subsector.

6.2.4 The Macroeconomic Environment of the Subsector

The performance of the subsector can be partially evaluated by observing how it reduces or exacerbates problems within the macroeconomy. In one sense the environment "demands" performance from the subsector in response to its problems and the potential of the subsector to contribute to the economy. Also, the functioning of the macroeconomy affects the product and factor markets adajcent to the textile subsector. The following sections outline the main macroeconomic issues that affect how performance of the subsector is to be viewed and the economy's impact on the textile subsector.

6.2.4.1 The Structure and Growth of Gross Domestic Product (GDP). The basic features of the structure and growth of the Egyptian economy are outlined in Tables 6.3 and 6.4. The first table shows the proportions of GDP by sector of the economy from 1960 to 1984. A strong impression is given of an economy that has developed from an agricultural into a petroleum economy. From 1960, agriculture declined consistently from 31.5 percent of GDP to 17.3 percent, while during the same years the petroleum sector grew from only 2.4 percent of total GDP to 15.6 percent.

Manufacturing, including construction, electricity, and mining, generally maintained its share of output in the economy. The combined shares of the commodity sectors dropped slightly, which masked a large change between the contribution of agriculture and petroleum. Distribution and services are the other major sectors of the economy. Distribution, which includes transportation as well as financial and trading services, grew dramatically after 1975 from 18.5 percent of GDP in 1975 to 28.2 percent in 1984.

TABLE 6.3

The Sectoral Structure of Gross Domestic Product
Egypt, Various Years

(Percentage of GDP)

Sector	Year				
	1959/60	1975	1979	1981/82	1984/85
Commodities:					
Agriculture	31.5	30.7	23.5	19.8	17.3
Petroleum	2.4	3.1	7.1	15.0	15.6
Manufacturing[1]	22.0	23.8	23.5	18.9	20.3
Total Commodities	55.9	57.6	54.1	53.7	53.2
Distribution	17.3	18.5	22.4	27.4	28.2
Services	26.8	23.9	23.4	18.9	18.6
Total	100.0	100.0	100.0	100.0	100.0
Total GDP (LE Mill.)[2]	1,285	4,779	6,647	19,639	23,785

[1]Includes Mining, Construction, and Electricity as well

[2]Deflated to the following years: 1959/60 = 1959/60; 1975 = 1975; 1979 = 1975; 1981/82 = 1981/82; 1984/85 = 1981/82

Source: Hansen, 1982; National Bank of Egypt, Economic Bulletin, 1985

The growth in distribution is mainly related to the opening of the economy and the reopening of the Suez Canal. After 1973 foreign banks entered Egypt, and the demand for trading services increased rapidly as pent up demand for imports was released. While this has generated growth in the economy, there has been some frustration with the lack of growth in the industrial sector, which has not grown nearly as fast as distribution (Bruton, 1981, p.11-13.) In contrast, the services sector dropped from 26.8 percent of the economy to 18.6 percent. However, there is some good news in the decline in services because many of the services are government expenditures on social services. It would appear, then, that the government is keeping some control over the costs of these services.

The different growth rates in the economy are shown in Table 6.4. The total real growth in the economy averaged 4.8 percent in the first period and was almost the same during the early 1980s, at 4.9 percent. It is clear that the very high real growth rate of 8.6 percent during the 1970s was abnormal. This boom was caused by the opening of the economy and the resulting rise in services, the worldwide petroleum boom, and the increased demand due to the inflow of worker's remittances (discussed below.) The sectoral growth rates show similar results as in the first table. For instance, slow growth in agriculture and extremely fast growth in petroleum were necessary for the sectoral composition to change as it did.

It is widely felt that the boom of the 1970s bought time for Egypt to face up to its problems of food deficits, the rapidly rising population, and the political pressures to improve the economy. The subsequent decline certainly occurred before those problems were solved (Rosewicz, 1986 p. 40.) However, the decline appears to be a return to

TABLE 6.4

Sectoral Growth Rates in Egypt, Various Years

(Percent Growth of Real GDP)[1]

Sector	Years 1959/60-1975	1975-1979	1981/82-1984/85
Commodities:			
Agriculture	1.9	1.6	1.4
Petroleum	5.3	33.4	6.0
Manufacturing[2]	6.3	8.3	6.8
Total Commodities	4.1	6.9	4.7
Distribution	4.8	14.0	5.7
Services	6.2	8.1	4.4
Total	4.8	8.6	4.9

[1]The growth rates are compound rates using deflated values, which were deflated to the first year of the series of years estimated

[2]Includes Mining, Construction, and Electricity as well

Source: Hansen, 1982; Nat. Bank of Egypt, Economic Bulletin, 1985

the long-term growth rate that existed prior to the boom, rather than a precipitous decline, with most sectors participating in the modest but continued growth. The long term growth rate in real GDP is about twice the population growth rate of 2.4 percent, so there has been real growth of about 2 percent per capita per year even at these high population growth rates.

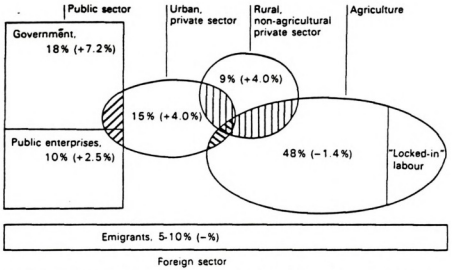

Note: Percentages not in parentheses refer to total employed, adequately described labour force resident in the country in 1976, according to the PC, with emigrants tentatively estimated. Military conscripts are included in their sector of origin. Percentages in parentheses indicate approximate growth rates during the 1970s according to the LFS and other statistics.

Source: Hansen, 1984

Figure 6.2

The Intersection of Submarkets in the Egyptian Labour Market

6.2.4.2 The Labor Force. While the decline from the growth rates of the 1970s has not been as bad as commonly publicized, there are a number of structural problems that are causing serious concern. In Figure 6.2, the different submarkets within the Egyptian labor market are

pictured (Hansen, 1982.) This figure provides an interesting perspective which shows the major elements in the labor market and some of the problems as well. By far the largest group of laborers is still in agriculture, with 48 percent of the labor force still working in that sector in the late 1970s.

What is unusual is that the second largest employer is the government, directly with a very large 18 percent of the labor force, but additionally with 10 percent of total employment in the public sector enterprises. The rest of the sectors of the economy account for only 24 percent of total employment.

The figure also shows that a relatively large proportion of the labor force is employed overseas. It is often noted that the need for government employment or opportunities in industry would be much greater with the additional burden of the 5-10 percent of the labor force working in the Gulf States. This shows that another piece of good fortune in Egypt was related to the oil boom of the 1970s.

The shaded areas in the diagram show overlaps in the different markets and primarily indicate that many people have second jobs in another market. Two major groups have attracted interest recently: the workers in the government who have a second job in industry or in the "informal " economy, and the agricultural workers who have second jobs in rural (or urban) industrial activities. Many government workers take positions with the government for security and then take a second job, sometimes during the government working hours (Rosewicz, 1986, p. 40.) The latter group was the focus of much of the MSU study, which revealed that some tailors and dressmakers are also farmers (Davies, et. al., 1984.)

A comparison of this picture of the labor market and the previous

analysis of the growth and structure in the macroeconomy is instructive. First, while there has been broad growth in the past decade, the labor force reflects a less developed country -- a very high proportion of the laborers in agriculture. Secondly, some of the growth has ended up in the government coffers, mainly through the petroleum and Suez Canal revenues, and this has permitted the expansion of employment and other activities in government (Jabber, 1986, p. 968.) The government has done such things as offer permanent jobs to all college graduates and extend subsidies on basic commodities, policies which are now adding a tremendous burden to the cost of running the government.

Without the petroleum boom it is hard to figure out where the labor force would be working now. Some greater industrialization might have occurred, and quite likely there would be more labor still in agriculture. Or perhaps a greater transition to government jobs would occur. However, one study commented that there are 250,000 government bureaucrats without job descriptions even now! (Bruton, 1981, p. 19.) A majority of the workers are engaged in low paying and low productivity jobs as it is, and there would be even more without the petroleum boom.

There is a very real problem of generating employment despite good growth rates in the economy, and it may not be possible to expect more than the current performance without a very unsuspected source of growth. The two largest employers in the economy will almost certainly release labor because the government's oil reveunes have declined with the drop in oil prices during the 1980s, and the unproductive employment housed in the government is becoming a burden as the budget deficit continues to widen (See Section 6.2.4.4.) With a large food import bill, Egypt needs better productivity from agriculture, which will probably mean less opportunity for labor to be employed there. Thus the two main sources of

employment will possibly shrink and certainly not grow much. The number of emigrants also will probably shrink. In fact it appears that the remittances from these workers have dropped substantially during 1986 (Jabber, 1986, p. 961.)

Thus the burden of employment growth has shifted to industry and private services almost by default. Papanek has estimated that industry must provide 300,000 to 500,000 jobs annually during the 1980s, compared to the actual employment generation of 150,000 jobs in 1979 (Papanek, 1982, p. 47.) Services have probably been adding jobs as fast as they can, given the tremendous expansion of trade and finance during the 1970s.

In addition to the pressing need for employment generation in productive work, there is also a need for equity in the distribution of the gains that have occurred during the 1970s. Many workers have not participated in the growth of the 1970s. This is a fact which is evident from the lack of structural change in employment, and a fact which is not lost on critics of the government. Besides fairness, this has implications for political stability. The gainers from the growth of the 1970s are identified with the "decadent" West, and this view plays into the hands of the Muslim fundamentalists and the Left (Jabber, 1986, p. 972-975.)

6.2.4.3 Foreign Trade and the Balance of Payments. If industrialization is required to add employment and increase incomes, then foreign exchange will be important to increase imported capital to speed up the process of industrialization, and new export markets must play a role in increasing outside demand for Egypt's products. The exports and imports of Egypt, both merchandise and services, are shown in Table 6.5. The first part of the table shows the receipts from foreign

transactions, and the second part shows the payments. Both cover the years from 1973 to 1984/85. The growth in receipts has been strong throughout all categories. Total exports grew at a remarkable rate of 35.1 percent per annum from 1973 to 1979 but experienced a slowing after that, as the growth was 11.5 percent.

What is unusual is that merchandise exports are only 32.7 percent of the total, while receipts from shipping and Suez Canal revenues were 12.5 percent and Interest, Dividends and Other were a major 41.4 percent of the total. Travel was the other major export, with 13.4 percent of total exports. Thus the foreign exchange earnings are by no means based on commodities.

The rapid rise of the external sector came from the three sources that occurred simultaneously: increased external political stability associated with the signing of the Camp David Accords, the rise of the petroleum economy and the finishing of improvements on the Suez Canal. Petroleum exports now account for 57.5 percent of total commodity exports, but the indirect revenues from remittances of overseas workers in the Gulf States is more important. (This is the largest component of the "Interest, Dividends, and Other Revenues.")

The gains from the Suez Canal and other shipping receipts are also substantial. This is partly due to investments to deepen the canal but also due to the stability in the area, which has encouraged shippers to begin to use the Canal again. Also related to the increased stability and the Open Door policies of Anwar Sadat is the increase in tourism and travel related receipts, which reached 13.4 percent of total receipts in 1984/85.

This rapid inflow of foreign exchange has allowed a tremendous increase in imports, which grew by 33.4 percent from 1973 to 1979, and

TABLE 6.5

Balance of Payments Components

Current Receipts

(L.E. mn.)

Year	Proceeds of Exports & transit trade	Insurance(1)	Shipping	Suez Canal Dues	Interest, Dividends & other revenues	Travel & other receipts	Total
1973	396.3	0.3	5.7	—	47.5	112.9	562.7
1974	653.9	0.2	7.9	—	107.9	161.6	931.5
1975	612.8	0.4	22.6	33.2	176.9	189.4	1,035.3
1976	629.7	0.1	37.9	121.7	323.4	290.3	1,403.1
1977	779.6	0.2	59.8	167.4	394.9	376.2	1,778.1
1978	1,388.5	2.7	86.8	359.5	1,334.0	629.0	3,800.5
1979	1,758.4	3.6	117.2	412.1	1,763.4	559.7	4,614.4
1980	2,697.1	6.8	287.7	664.3	2,205.4	774.0	6,435.3
1980/81	2,779.0	—	355.2	546.3	2,504.5	1,043.3	7,228.3
1981/82	2,765.1	4.1	401.2	636.2	2,090.8	842.5	6,739.9
1982/83	2,682.9	11.8	451.7	669.6	2,998.2	1,078.4	7,892.6
1983/84	2,859.8	—	427.8	681.8	3,692.6	1,070.9	8,732.9
1984/85	2,837.5	—	461.7	627.7	3,509.9	1,159.8	8,676.6

Current Payments

Year	Payments for imports & transit trade	Films	Commercial Payments	Insurance(1)	Shipping	Interest, Dividents & other payments	Travel & Maintenance	Governments Expenditure	Other Disbursement	Total
1973	622.3	0.2	19.8	1.5	6.5	50.5	24.0	22.7	38.5	786.0
1974	1,252.8	0.1	36.0	3.5	9.3	61.1	41.1	30.3	30.0	1,464.2
1975	1,691.1	0.9	65.3	5.3	31.8	74.5	41.2	40.4	53.7	2,004.2
1976	1,646.2	0.2	45.2	3.5	31.1	107.0	48.3	41.6	73.0	1,996.1
1977	1,766.0	0.3	49.4	1.7	38.0	124.7	67.2	65.4	158.5	2,271.2
1978	3,697.8	1.6	89.3	6.6	52.4	290.2	180.7	110.9	262.6	4,692.1
1979	4,672.6	0.9	76.6	5.0	59.2	299.5	173.2	134.5	316.8	5,738.3
1980	5,304.4	2.4	92.4	3.4	102.8	426.1	170.0	116.3	603.9	6,821.7
1980/81	6,678.5	—	117.6	—	125.4	532.8	199.1	118.4	588.3	8,360.4
1981/82	6,569.0	1.4	121.4	11.1	118.9	659.2	198.3	190.5	736.8	8,606.6
1982/83	6,382.5	1.8	92.4	13.5	111.9	789.2	248.4	181.4	843.4	8,664.5
1983/84	7,348.8	—	97.5	—	143.9	839.9	216.3	195.3	1,007.3	9,849.0
1984/85	7,734.1	—	105.6	—	131.5	714.8	209.5	223.9	1,017.4	10,136.8

(1) Other than on Imports and Exports

Source : C.B.E.

then slowed with the decreased inflow of foreign currency to a 9.6 percent growth rate from 1979 to 1984/85. The total outflows of foreign exchange are not limited to imports but also include payments on debt and services of foreign entities. The purchases of commodities accounted for most of the foreign exchange use, at 76.3 percent of the total payments. Interest payments were only 7.1 percent of the total payments, but this may not reflect certain government to government obligations.

The table also shows a persistent balance of payments deficit, although it has not deteriorated greatly in percentage terms. The deficit of LE 223 million was 39.6 percent of the total receipts in 1973, while in 1984/85 the deficit of LE 1,460 million was 16.8 percent of total receipts. However, there may be reason to believe that this does not reflect the total picture, since other estimates give a higher current deficit. U.S. Embassy estimates give a current account deficit of U.S. $2.9 billion for 1985, and about U.S. $3.5 billion for 1986 (Rosewicz, 1986, p. 40.) Nonetheless, the picture of a persistent and growing balance of payments deficit is clear, although not in percentage terms.

The increase in foreign exchange receipts has levelled off because of the demise of the oil boom and the natural levelling of the gains from political stability, which in fact may be reversing themselves. However, these inflows supported commodity purchases such as food imports and machinery, which were 27.7 percent and 25.8 percent of total commodity imports in 1984/85 (National Bank of Egypt, Economic Bulletin (hereafter NBE-EB), 1985, pp. 400-404.) With the pressures of a growing population and the need for development described earlier, these imports are essential to the preservation of political stability in the country.

6.2.4.4 Governmental Fiscal Operations. The fiscal solvency of

the government affects what it can put into development projects and its access to international capital markets. The revenues and expenditures of the Egyptian government are summarized in Table 6.6. Current revenues are bolstered by the tax revenue and profit transfers from oil companies, the Suez Canal Authority and public sector companies. Those sources accounted for almost 30 percent of the central government's revenues in 1981/82.

Fifty percent of expenditures are for running the government (probably including the military), but another 30 percent is for subsidies. The government extensively subsidizes food, some agricultural and industrial inputs, and butagas, which is the primary source of fuel for almost all urban dwellers and many rural inhabitants as well. In 1976, the subsidies were LE 518 million, of which the largest expense item was wheat, costing LE 152.3 million. The cotton sold to the spinning and weaving companies and the popular supply cloth were the second and fourth largest items, subsidized by LE 50 million and LE 36.6 million respectively (Mohie-Eldin, 1978, pp. 3-5) In 1982, total subsidies had grown to LE 2,917 million, with all food at LE 2,191 million and popular supply cloth having climbed to LE 117 million (Table 6.6; Trade Chamber, 1982.)

The "Net Financing Required", shown under "Investment Expenditures," is a stimulative fiscal policy resulting from the investment spending of the government. In 1979 and 1980/81, the current account was almost in balance, which is shown in the line for "Current Acct. Savings", so the investment spending accounts for most of the deficit. Most financing has come from the domestic banking system, which reduces the ability of other enterprises to obtain finance.

TABLE 6.6

GOE FISCAL OPERATIONS
(in Millions of LE

Category	1979	Actual 1980/81	Budget 1981/82	Prelim. Actual 1981/82	Budget 1982/83	July-September 1981/82	July-September 1982/83
Current Revenues	3634	7279	8224	7650	9005	1398	1472
Central Government	3148	6060	7534	6507	8314	1341	1244
Tax Revenue	2412	3977	5087	4433	5681	1047	1080
Petroleum	(125)	(704)	(913)	(635)	(753)	(210)	(253)
Suez	(127)	(172)	(282)	(164)	(195)	(70)	(90)
Profit Transfers	501	1751	2116	1712	2206	256	130
Petroleum	(253)	(1376)	(1215)	(1110)	(1195)	(100)	(-)
Suez	(148)	(189)	(358)	(220)	(317)	(35)	(5)
Other Nontax Revenue	235	331	332	358	429	38	26
Local Government Revenue	162	252	297	256	290	18	18
Investment Self Finance	374	967	393	888	402	39	210
Current Expenditures	3921	5485	7267	8890	9138	1426	1665
Central & Local Government	2321	3385	4431	4405	6226	696	848
Public Authority Deficits	234	275	451	715	604	69	94
Subsidies	1230	1571	2000	2917	2040	566	477
Food	880	1108	1473	2191	1337	491	334
Agricultural Input Subsidies	102	119	133	229	160	24	40
Industrial Input Subsidies	41	58	52	114	117	1	28
Butagas	40	52	42	62	42	23	11
Treasury & Invest. Funds	136	254	385	1154	268	95	246
Current Acct. Savings[1]	-287	1794	957	-1240	-133	-28	-193
Investment Expenditures	2547	3766	3845	4218	4031	650	581
Net Financing Required[2]	2834	1972	2888	5458	4164	678	774
Source of Financing:	2834	1972	2888	5458	4164	678	774
Net Foreign	629	638	1019	745	597	80	34
Net Domestic	2155	1334	1869	4713	3567	598	740
Non Banking	(899)	(1181)	(1869)	(1261)	(2067)	(309)	(375)
Banking	(1256)	(153)	(-)	(3452)	(1500)	(289)	(365)

1/ Current revenues minus current expenditures.
2/ Investment expenditures minus current account savings.

6.3 The Regulatory and Policy Environment of the Subsector

6.3.1 Introduction

Regulations and policies influence a large number of activities in any subsector, both directly and indirectly. The opportunity set of different actors is shaped by the regulatory and policy environment of the country. Also, actors are affected differentially by regulations based on their location in the subsector.

In the following sections five areas of legislation important to the subsector are described. In each section the types of regulations and their importance are discussed, first for the public and then for the private sector. Where it is known, the differential impacts on firm-groups in the subsector are mentioned.

6.3.2 The Regulation of the Public Sector

One main historical impact of the Nasser era has been the emergence of the public sector, whose capital is owned primarily by the government. The focus in this section is on the public enterprise, which is a joint stock company operating in the competitive sectors of the economy -- i.e., a company that operates where monopolies do not exist, but whose stock is mostly owned by the government (Handoussa, 1983, p. 1.)

The government's participation in public enterprises is through a "Higher Council," which has authority over all the enterprises in one sector and is associated with different ministries. The major textile companies are under the Ministry of Industry, but the other parts of the

subsector fall under the jurisdiction of other ministries -- wholesalers and retailers are under the control of the Ministry of Supply, cotton ginning is in the Ministry of Economy, and cotton production is under the Ministry of Agriculture.

The Higher Council is composed of the chairmen of the companies, the minister of the supervising ministry, representatives of the other concerned ministries and up to five external experts, and it is supported by a technical secretariat. Its duties are to set objectives for the sector and each individual enterprise, especially to design performance criteria and monitor the industry performance in light of the criteria. Recently a Public Holding Organization (HO) has been created in Law 97 of 1983 to replace the Higher Council. The main objectives appear to be to streamline the number of participants and to give more control to the Holding Organization, but the firms are still controlled by outside entities (Jones, 1981, Part 3, pp. 1-23.)

Annual production targets for public sector enterprises are made by the legislature in consultation with the Ministry of Plan. Within these broad targets there is some flexibility for managers to choose quality and other characteristics of the output. "Managers are ... expected to adjust their variety mix so as to respond to demand conditions and increase profitability, while meeting their broad targets and using plants and labor forces fully" (Clark, 1984, p. 9.)

One of the government's major objectives is to assure that the public has access to certain commodities of a standard quality and affordable price (Clark, 1984, p. 9.) The rationed cloth program is one of the major non-food commodities that is targeted since 27 percent of the cloth produced by the whole textile system is rationed.

The assignment of production targets then leads to the

determination of investment requirements. The firms make initial projections of the expansion desired, and then GOFI, the General Organization for Industry, makes demand projections and determines the investment needed to meet these projections.

This exercise takes place within the context of a Five Year Plan, which is supposedly modified each year. However, each modification to the Plan requires a legal amendment, so that it is difficult to make more than minor changes. Some flexibility has been added through the National Investment Bank, which is affiliated with the Ministry of Planning and Investment Coordination, and is granted an annual budget to fund investment activities. The Bank, in consultation with various ministries, is able to shift funds to supply those projects that are progressing the fastest. This is the main source of investment finance in the public sector since virtually all profits are distributed to a variety of different interested parties: a profits tax of 32 percent is levied; then 10 percent of after tax profits is allocated to workers, and an additional 15 percent goes to worker benefits; next non-governmental shareholders are paid dividends, and wH15" s left is transferred to the government (Clark, 1984, p. 30.)

The "out-the-front-door--in-the-back-door" nature of savings and investment in the public enterprises -- the need to send all profits to the government, and to request all financing from the NIB -- doubtlessly reduces flexibility, increases transactions costs and bureaucratizes the whole process. However, the control over the investment finance is not necessarily negative, because the investment can be channeled to areas of highest return, and it possibly restricts excessive investment in certain projects (Stigliz and Sah, 1986.) However, the assessment of demand by GOFI is critical to the success of the centralized decision making.

In addition to the production and investment control exercised by the government, the public sector faces considerable labor regulation. Four worker's representatives sit on the board of directors of public enterprises, and wages and job specifications are based on ministerial decree and standard descriptions of job qualifications. Recent legislation, Law 48 of 1978, has given more control to the enterprises to determine wage and employment policy to counter the general perception that public enterprises are unable to effect productivity improvements due to labor regulations (El Salmy, 1983, pp. 39-40)

6.3.3 The Regulation of the Private Sector

The legal status of the private sector is governed by two main laws. The first company law, Law 26 of 1954, determined the status of joint-stock companies in the private sector. Law 26 reflected the nationalist and socialist orientation of the Nasser era in its restrictions on labor relations, investment decisions and the distribution of profits. This restrictive legislation effectively squelched the formation of new businesses as corporations. However, businesses could and did operate as partnerships or sole proprietorships, perhaps operating with less regulation (Gillespie, 1984, p. 51.) In line with the economic liberalization of the Open Door Policy of Anwar Sadat, a new company law, Law 43 of 1973, was issued that reduced some of the restrictions of Law 26. The practical aim of Law 43 is to encourage foreign investment to help modernize the economy. Recently some provisions of Law 43 have been extended to Law 26 companies through Law 159 of 1981.

Since the liberalization Laws came into effect, 1,649 projects

have been approved under Law 43 (1973 - 1983), and 142 companies became Law 159 companies in the 15 months after the Law's enactment. About 224,000 jobs have been created from a LE 12.7 billion investment. Wages of LE 396 million per year indicate that the average wage in these projects was LE 1,768 per year, somewhat better than an urban tailor's wages (NBE-EB, 1985, p.256.) Seventy percent of the investment has come from Egyptians, probably interested in avoiding the regulations of inland investment.

6.3.3.1 Public Control over the Private Sector. In the national plan, the private sector is given the residual production between the estimated demand for a commodity and the known production of the public sector. The control over performance of the private sector with respect to its "obligations" to the plan is not usually enforced by quantitative considerations, but rather through the control of investment permits given out by GOFI and the Ministry of Planning and Investment Coordination, and the allocation of critical inputs, especially yarn.

The investment requirements depend on the status of the private sector firm. For Law 26 companies, all additions to net capacity in excess of LE 8,000 must be approved by GOFI, with smaller amounts being approved at the governorate level. For Law 43 companies, the investment is approved by the General Authority for Investment and Free Zones, which first determines whether the application is a new cash equity contribution. The constraints on investment by partnerships are not known but may be important given their prevalence. Perhaps the toughest regulation is the allocation of yarn to private sector weavers, who are given a specific amount of yarn per loom. By determining the amount the private sector can get, the government controls quite closely the growth of the private sector weavers. Apparently the allocations are not always

met so there are some restraints being imposed, although perhaps not intentionally (Trade Chamber, 1979, p. 6.)

The government also controls the private sector through price controls. The Ministry of Industry controls prices on eight intermediate products, of which the largest in value is cotton yarn. There are also 16 finished goods that are controlled, of which popular supply cloth is the third largest in value (Clark, 1984, p. 16.) Thus the private sector either buys controlled inputs (which may give them some gains) or must compete with price controlled outputs, such as the popular supply cloth. There do not appear to be price controls on higher quality cloth, printing and dyeing services, and most RMC products.

As indicated before, the control over total investment in the private sector may not be entirely negative since there will be less possibility of overcommitting resources to the textile subsector if the investment is carefully allocated. However, again there needs to be good analysis of the investment requirements, which is not easy to do.

6.3.3.2 The Regulation of Margins in Private Sector Distribution. A somewhat different form of price control has to do with the allowed margins on a particular product, which has been directed at the distribution system. The wholesale margin for cloth is six percent, and the retail margin is an additional 19 percent. If a product is purchased directly from a weaver, all of the allowed margin of 25 percent can be captured by the retailer.

6.3.3.3 Labor Regulations. The basic law relating to labor regulation is Law 137 of 1981, which specifies a whole range of procedures for private firms, including job vacancy registration with the Manpower Department, labor relations, employee rights, dismissal procedures, layoff and worker cutback procedures, and safety provisions

(Arthur D. Little, 1982, p. V-10.) Whatever the actual content of Law 137, the fact that there is legislation regarding each aspect is significant. Law 26 companies also must pay ten percent of net profits to workers. Prior to 1981 and Law 159, this figure was 25 percent.

Some of the labor regulations directed at the private sector are contingent upon the size of the company. Firms with over five employees must post all work regulations. Firms with more than 50 workers must establish a joint worker and management Consultative Council to consider labor relations. Larger firms must have doctors and nurses available, and larger firms with more than 100 female employees must have a full time nursery and give female workers pregnancy leaves. There are also regulations enforcing the auditing of tax returns for large firms (Arthur D. Little, 1982, p. V-10,11.)

Both the private and public sectors are able to avoid many of these regulations if they can enter into a venture as a Law 43 company. The public sector is thus able to expand without the hampering effects of many of the old laws by participating in Law 43 projects; with one-fifth of the inland investment coming from the public sector, they obviously have decided to take advantage of it (NBE-EB, 1985, No. 3, p. 260.) Since over 75 percent of the total investment in these less restricted companies has come from Egyptian sources, the importance of the concessions to Law 43 firms is clear (ibid.)

It is far from clear how detrimental these regulations have been, since there are alternatives to being incorporated as a Law 26 company. It would be useful to know the specific regulations for partnerships and sole proprietorships to see how restrictive those regulations are. Also, there are limits to the bureaucracy's ability to enforce these regulations.

6.3.3.4 Taxation Regulations. The tax laws for the private sector are apparently uniform across all forms of business enterprises, including the individual entrepreneurs. With Law 157 of 1981, the profits tax rate goes from 20 percent on the first LE 1,000 to 32 percent on all profits above LE 4,500. Accounting statements must accompany tax payments, which creates an issue for those small firms that do not keep records. Based on personal observation, taxes for small enterprises are assessed by a specialist after an examination of the physical premises and the number of employees. One problem is that this process tends to lag, so that tax payments for a number of years are lumped together.

6.3.3.5 The Regulation of Foreign Trade. Egypt has multiple foreign exchange markets, reflecting the attempt of the government to regulate the exchange rate and exert control over the ownership of foreign exchange. This has led to a fixed rate on the Egyptian Pound. However the needs of business have been partially recognized with the existence of an own exchange market, in which firms can purchase and sell at more flexible rates but still with restrictions. In addition, an active black market has existed for many years, which functions well since there is a large tourist population. In January 1985 the Egyptian Pound was floated, which will increase the uncertainty associated with the future direction of these markets.

An extensive tariff structure has existed since the import substitution industrialization policies during the 1930s. Recent estimates of the tariffs at different levels of the subsector show increasing protection up through the stages: the tariff is 15 percent for fibres, 56 percent for yarn, 111 percent for cloth, and 145 percent for RMC products (GATT, 1984, p. 126.) These are nominal rates of protection. Simple effective rates of protection, calculated using these

figures and the value added proportions given in Appendix 2, show that RMC products have an effective rate of 196 percent while cloth is only slightly less at 168 percent (See Caves and Jones, 1977, p. 207, for the calculation procedures.) This implies that domestic industries will over-expand, earn excess profits and be high-cost relative to the international competition. There are many offsetting price controls and subsidies in the textile subsector, so these rates are not as indicative as they might seem. In Appendix 4, the net impacts of the different policies on prices in the economy are discussed.

Both imports and exports require licenses. If a firm has access to its own foreign exchange from exporting, the procedure is somewhat easier than if they must apply to get it through the own exchange market. Licenses are also required for banks to open letters of credit to pay for imports. Law 43 firms are exempt from these licenses.

Since 1982, the government's control over imports has been extended through an import rationalization program. For a large list of products where local production is thought to be adequate, prior approval must be secured from the Import Rationalization Committee. Obviously, problems can occur due to delays, arbitrary judgments or lack of data on the "adequacy" of the local supply situation.

Finally, an export rebate system exists to give exporters of locally produced goods a rebate of tariffs paid for imported inputs, so that they face world prices in production and can compete on an equal footing. However, it might take two years to receive the rebates (World Bank, 1977, p. 34.)

6.4 Support Organizations

In this section the organizations that provide support to the textile subsector are reviewed to indicate which firm-groups in the subsector receive the best support. There is an extensive variety of support organizations in Egypt. Because of the historical significance of the public sector and the philosophy of state intervention, many governmental support organizations have been created. Additionally, because of the low income level in Egypt and her geopolitical significance, many development organizations are also present which have governmental, religious and private affliations.

The governmental organizations include training and productivity-enhancing groups from the Ministry of Industry, several organizations that assist small enterprises, and some general research and standards organizations. The developmental organizations are extremely diverse, ranging from massive interventions, such as USAID, to extremely small, grass roots support organizations.

6.4.1 A Review of Organizations that Support the Subsector

A number of the organizations were reviewed to see how they affect the textile subsector, and a summary is given in Table 6.7. About 15 organizations were assessed according to their clientele, their organizational goals, and their levels and sources of funding. Most of the columns in the Table should be self explanatory, except for the one describing the levels of funding, in which the differences are indicated by a "Poor," "OK," or "Good." These levels are simply impressions of the funding based on the number of employees, the perception of quality and

Table 6.7

Support Organizations for the Textile Subsector in Egypt

Name	Acronym	Clientele	Funding Level	Purpose
General Organization for Industry*	GOFI	Larger Public and Private Firms	Good	Regulatory Control Demand/Investment Analysis & Allocation
Productivity and Vocational Training Department*	PUT	Larger Public and Private Firms	Good	Training, Skill Upgrading
Egyptian Organization for Standardization*	EOS	All Sectors	Good/OK	Establishing Product Grades & Standards
Engineering & Industrial Design Development Center*	EIDDC	Higher Tech Firms (Public & Private)	Good	Technical Design & Machinery Development
Handicraft Industries & Productive Cooperatives Org.*	HIPCO	Small Producers & Production Coops.	Poor	Regulation of Coops A Variety of Interventions
The Producer Family Program*	X	Small-Scale Family Producers	Poor	Income Improvement for Poor Families
Federation of Egyptian Industries*	FEI	Medium & Large Private Firms in 12 Industries	OK	Policy Analysis/Lobbying Information Provision
National Research Center*	NRC	Large and Modern Industrial Firms	Good	Development of New Products and Processes in Five Industries
Cotton Textile Consolidation Fund*	CTCF	Larger Public and Private Textile Firms	Good	Promotion of Textile Exports

Table 6.7(cont.)

Name	Acronym	Clientele	Funding Level	Purpose
Pan Arab Textile Federation	X	Unknown	?	To Create a Pan-Arab Textile Industry
United States Agency for International Development	USAID	Diverse	Good	Economic Development and Political Relations
Private Volunteer Organizations	X	Diverse - Mainly Poor	Poor/OK	Income Improvement for the Poor

the jobs undertaken by the support organization. The exact level of funding is often not known.

Based on this review, several conclusions may be offered. First, it appears when organizations are well-funded and progressive, especially when they are technically oriented, they focus on the public sector and perhaps on larger private firms. This would include the Ministry of Industry organizations, the National Research Center and the EIDDC. Almost by definition, when an organization is oriented towards the small private firms, it is poorly funded. Examples include the Ministry of Social Affairs Producer Family Project and the cooperative and handicraft support organization in the Ministry of Local Government, HIPCO.

A second conclusion is that regardless of the funding level, most of the technical support organizations have very wide mandates to support many industries. Most have specific industry chambers or subdivisions, but the funding must then go across many industries, and relatively little can be directed to any particular industry.

A third conclusion is that very few lobbying or trade association groups can function with real autonomy. All seem to have some ties to the government and have mandates that include a mix of regulatory and promotion goals, some of which seem to be contradictory. This is especially true of HIPCO and the FEI, which promote but also keep track of their member firms.

One trade organization related to the textile industry appears to offer potential. The Cotton Textile Consolidation Fund (CTFC) receives a check-off from each bale of cotton sold and uses it to promote the export of cotton and improve standards in textiles. It appears to cover garment making and provide important information and research assistance for the more progressive firms in the subsector who are exporters.

Altogether, then, it appears that most firms in the subsector do not receive the level of support from these technical and lobbying groups that would give them a competitive advantage. There might be two exceptions: the public sector firms do receive technical and training support which may be of fairly high quality, and the CTFC also appears to support the larger private firms and public sector firms in ways which may be important. Also having a connection with the Worker's Project (discussed below) should also give firms an advantage in exporting. This appeared to be limited to the more progressive medium and large firms. In contrast, the majority of small firms in the MSU study had not even heard of many of the organizations that exist to help them, and less than 10 percent had used them at all (Davies, 1984, p. 81.)

The small scale and family support organizations, such as the Producer Family Project and many efforts of the PVOs, do provide useful benefits even though they are poorly funded. The ubiquitous sewing projects of these organizations are especially important because over 30 percent of the garments appear to be made at home, and improving the quality of home production will help to extend already limited budget of the trainees' families and friends.

In addition to these support groups, the banking firms are important because they affect the ability of firms to expand through the provision of credit. Like most sectors of the economy, the banking institutions are both private and public, with 83 percent of loans held by the four public sector banks in 1980 (Arthur D. Little, 1982, p. V-31.) Most of the private banks operate under Law 43, and appear to make loans mainly to other Law 43 firms. The private banks are either commercial or investment banks, with the former making mostly short-term loans for working capital purposes.

The main investment banks with potential to assist the textile subsector are the Development Industrial Bank (DIB), the Arab Investment Bank and the Misr-Iran Development Bank. The latter two are focused on larger loans and mostly on Law 43 projects, and they make loans only in foreign currency. The DIB is capitalized by the World Bank and other donors and has a mandate to make loans to small firms (Clark, 1984, pp. 47-50.)

Most loans have maturities of less than a year, so they are more appropriate for working capital than for either expansion or longer term capital improvements. Of about LE 7 billion in commercial loans at the end of 1980, less than 3 percent had maturities over one year (Clark, 1984, p. 76.) The development banks, in contrast, had 78 percent of their total loans with maturities of over one year but on a much smaller base (Clark, 1984, p. 75.)

The DIB and other investment banks will be of increasing importance to the private firms in the textile subsector, especially the medium and large firms. The small tailors and dressmakers have had little contact with banks; less than 2 percent have ever taken a loan from a bank (Davies, 1984, p. 53.)

6.4.2 Promoting Demand in the Textile Subsector: The Popular Supply Program and the Worker's Project

Two programs run by the government are important sources of demand for the products of the textile subsector. The elements of each of these programs are mentioned in this section.

6.4.2.1 The Popular Supply Program. One of the major government programs which affects the textile subsector is the cloth rationing

program, known as the Popular Supply program. In 1979, that program accounted for about 38 percent of the cloth sold by retailers domestically, which represented about 27 percent of the total production of cloth. Both the number of families included and the costs of the program have been growing. According to a Trade Chamber report, the cost of the program grew 30 percent from 1981 to 1982, from LE 90 million to LE 117 million. That was partly due to increases in production costs, but also to an expanded number of recipients (Trade Chamber, 1982, p. 1.)

The allocation of the popular supply cloth is controlled by issuing quota booklets, presumably based on need, although the criteria are not known. A quota booklet may represent any number of people. If only one person is represented by the booklet, the quantity that may be purchased is six meters, with the allocation increasing as the number of people represented increases. The maximum allocation is 24 meters for a booklet representing seven or more people.

In 1982, there were about 1.2 million quota booklets in Cairo. If a booklet represented four people on average, then 4.8 million people were covered by the program in Cairo alone, which is about 40-50 percent of the population. The extent of the subsidy per person is, however, modest, being around LE 2.00 to LE 2.40 per person. (This assumes that the subsidy per meter is about LE .40, and each person receives an average of 5 to 6 meters.) Thus, the subsidy may be of mostly symbolic importance to the population and may be more important to maintain the volume of the public sector weavers and to use the cotton production of Egypt for local consumption.

The cloth is produced either by the public sector or by subcontract to private sector weavers. The two public sector wholesalers supervise the distribution of the cloth and distribute it to the

retailing industries in the following proportions: 53 percent to the public sector retailers; 35 percent to private sector retailers; and 12 percent to consumer cooperatives. The private sector is allowed a four percent margin above cost to cover their selling costs. This has apparently been inadequate, since the number of distributors has dropped more than 50 percent in the last four years, from 520 to 250, despite formal and informal penalties for non-compliance (Trade Chamber, 1982, p. 2.)

Similar products exist in the free market at about three times the price, but these are also of better quality. Complaints are apparently common about the quality of the popular supply cloth, and, given that the distributors are quite unsatisfied with the return, it is likely that the service given popular supply customers is poor as well.

6.4.2.2 The Workers' Project. A second program involving the textile subsector is the Workers' Project. All government employees and their families are entitled to purchase a certain amount from subsidized stores that stock ready-made clothes. The goods are produced by about 100 small producers who have been recommended by the Federation of Egyptian Industries and who then submit samples. (This probably means that they are not too small.) The Technical Secretariat determines the models, and the quality must meet the standards of the Egyptian Organization for Standardization. This activity appears is designed to help the RMC industry develop its quality as well as to provide a subsidy to government employees.

This program may create a major push towards RMC production because there are many government employees who, with their families, include several million people. The details and objectives of this program would be worth understanding fully.

6.5 Summary

This chapter has outlined the impacts of the environment on the subsector. The issues in each of the main categories of influences were first discussed. The historical influences include the impacts of a socialist agenda followed by a movement to more market-based philospohy. Resource scarcity, especially arable land, has created several major problems when associated with a rising population.

There are also problems in the macroeconomy, such as employment generation, and trade and budget deficits that constrain the development process considerably and have created an imperative to modernize the economy and improve productivity; but there are difficult problems balancing that need with the need for employment generation. The textile subsector has a major role to play in balancing these needs.

Finally, the second part of the chapter looked at the regulations and support organizations in the economy. Both the public and private sectors in the economy were seen to be affected significantly by regulations regarding investment, labor relations, foreign exchange and trade, prices, and quantity allocations. The pattern and change of these regulations will affect the evolution of the subsector in important ways.

The Cotton Textile Consolidation Fund, the Worker's Project, the Popular Supply Program, the sewing projects of PVOs and the Ministry of Social Affairs, and the financial institutions appear to be significant influences on the textile subsector. Other groups appear to be moderately supportive but not critical to the functioning of the subsector.

MICHIGAN STATE UNIV. LIBRARIES
31293005487537

MICHIGAN STATE UNIVERSITY LIBRARIES
3 1293 00548 7529
2142 7/29
V.2
LIBRARY
Michigan State
University

RETURNING MATERIALS:
Place in book drop to remove this checkout from your record. FINES will be charged if book is returned after the date stamped below.

THE EVOLUTION OF THE TEXTILE SUBSECTOR IN EGYPT: DEVELOPMENT IMPLICATIONS

VOLUME II

By

Stephen P. Davies

A DISSERTATION

Submitted to
Michigan State University
in partial fulfillment of the requirements
for the degree of

DOCTOR OF PHILOSOPHY

Department of Agricultural Economics

1988

53644-37

CHAPTER 7

THE EVOLUTION OF THE SUBSECTOR

7.1 Introduction

This chapter presents the evolution of the subsector from several different perspectives. Before assessing each industry, the evolution of consumer behavior is discussed. Each of the industries is then analyzed in terms of its past evolution to its current industrial structure, followed by a projection of the important quantitative measures. The next portion of each section analyzes several qualitative variables that may effect the future evolution of the industry. These variables include insights from the behavioral and institutional variables discussed in Chapter 5, sensitivity analyses regarding the major uncertainties currently facing the industry, and the role of other parts of the subsector in the evolution of a particular industry.

7.2 Evolutionary Aspects of Consumer Behavior

The consumer makes a number of choices that have a profound impact on the subsector evolution. The most important choice is the decision to purchase ready-made clothing versus tailored products, or to fashion garments at home. The discussion first considers why consumers buy RMC products and then the current impediments that keep them from buying more RMC products. Finally, the anticipated changes that may cause the shift

to occur are examined.

The consumer would tend to buy ready-made clothing if the styles differ between RMC and tailored products, as they do in Egypt, and the consumer prefers the RMC styles. While it is sometimes easy for tailors to imitate the RMC styles, consumers may prefer that tailors not experiment with their cloth. For other styles, the tailors cannot imitate them well unless they are very highly skilled. In addition, well known brand labels cannot be replicated as easily by tailors, since it takes a relatively large production capacity to sell enough products to create brand familiarity with consumers. Also, consumers are influenced by what others buy and will buy RMC products in imitation.

While preferences are important, there are also some factors in the decision that weigh on the cost side. If RMC products are cheaper including the opportunity cost of time, then, other things being equal, they will be in greater demand. The time cost will be higher for tailored products than for RMC products because shopping for cloth, a discussion with the tailor, and often refitting are required for the tailored product, but only one stop is needed to purchase a ready-made garment. Also, with higher personal incomes, the opportunity cost of shopping increases, and tailored goods become more costly.

Finally, the consumer will tend to buy RMC clothing when it is readily available or if it is successfully promoted. This is partly a cost consideration, in that the time cost of shopping is reduced, but also it is easier for consumers to learn to consume ready-made clothes when they are more available. On the other hand, when the consumer has financial problems, prefers individual attention or dealing with friends, or likes to bargain, he may find the RMC transaction is less attractive.

There are a number of factors that are keeping the consumer from

purchasing ready-made clothes. The results of the cost analysis done in Chapter 4 showed that the tailored products are lower cost products at this point, often substantially so. Also, the average consumer generally has a higher opportunity cost of money than of time, so the excess time required in tailoring may be of little cost and may indeed provide some utility from socializing. Also, the traditional system of piece goods retailing allows families to spend more on cloth if they have the potential for home garment making.

Costs are not the only factor that keep most consumers from purchasing ready-made clothing. Another factor is that the popular supply program is based on piece goods, and 38 percent of the cloth sold as piece goods is rationed and subsidized. The popular supply program is presumably cheaper to operate as a piece goods program because the program only subsidizes costs of cloth and retailing, and not the making of the garment.

Another reason that consumers do not use RMC products is simply their lack of availability in the market. It is harder for people to voice their preferences for products that do not exist. Related to this factor is the fact that purchasing RMC products is a quite different process from using a tailor. With the prevalence of piece goods, consumers may forego learning to consume RMC products, and the demand for RMC products may not increase.

Finally, the traditional styles, which are not made by the RMC producers, are better suited to the prevailing poor quality cloth and tailoring skills because they are looser fitting and can be resewn if the stitching comes out. Thus a traditional garment may have more wear than the RMC product in the face of poor quality.

From the comparison made above, it is clear that RMC consumption

will increase if a number of factors change. If tastes and preferences change so that the RMC styles or labels are preferred, then, despite costs, more ready-made products will be consumed. If incomes increase substantially so the opportunity cost of time increases, there may be a movement to RMC products, provided that the quality has increased so that the sizes are reliable and the sewing and cloth quality is acceptable. Tailors may exist for longer than expected if the consumer must make many returns and tolerate low quality cloth in RMC products. Finally, as RMC products become more available, there is an accelerating impact on tailors and dressmakers; they become harder to find and people are forced to consume more ready-made clothing.

7.2.1 Projected Demand for Clothing.

The demand for clothing production is projected based on quantities, taking into consideration changes in income and population growth. These quantities will determine the demand for all intermediate products in the subsector, and will thus provide the context for the expansion and competition within the different industries. Most of the discussion focuses on the domestic market since it is the greater portion of the market for clothing and cloth, and because projections of how well Egypt will do in the international market are even more difficult to make than for the domestic market. The export market will be discussed where appropriate in sensitivity analyses.

The projections used for the total quantities of cloth are presented in Table 7.1. The projected consumption in different years is hypothesized to include three factors: the base quantity consumed in 1979 of 164,961 MT, the effects of changes in population and the effects of

changes in income. Any changes of tastes and preferences are assumed to take place "inside" these quantity figures and will not make an impact on the quantities needed or the types of firm-groups who provide the supply. (See section 7.2.1.1 below for the impliocations of using quantitites for projections.)

The additions to quantity demanded due to changes in population are given in Column 2 of the table. These projections are based on a starting population of 41 million people in 1979, which is assumed to grow at 2.5 percent per annum from 1979 to 1985 and 2.1 percent thereafter. This reflects some change in demographic patterns that is consistent with the changes in trends indicated in Chapter 4. The population figures are multiplied by 4.02 kilograms, the estimated retail consumption of cloth and clothing in 1979.

Two scenarios are suggested for the changes in consumption due to increases in income in Columns 3 and 4. Both assume an elasticity of 1.25, but they differ in the assumed growth rate of personal income. (See Chapter 4, Section 4.2.4, for a discussion of the elasticities.) In the first case, the per capita growth rates in income are assumed to be about 1 percent, a lower figure than has occurred historically in Egypt. The second case uses per capita increases of 2 percent, which has been the historical average, excluding the 1970s. The figure used for projecting total consumption is the simple average of the two scenarios. The implication is that economic difficulties will make historical rates of growth hard to replicate.

Changes in assumptions would yield different outcomes, but most would not change the general conclusions about the possibilities

TABLE 7.1

Two Scenarios for Projected Retail Consumption[1]
of Textile Products in Egypt
(Metric Tons)

Year	1979 Consumption	Increased Demand from Pop.[2]	Increased Demand from Income		
			Low[3]	High[3]	Average[3]
1979	164,961	x	x	x	x
1985	164,961	26,321	12,685	26,014	19,350
1990	164,961	47,251	19,081	50,184	34,633
1995	164,961	70,474	35,586	76,869	56,228
2000	164,961	96,239	47,920	106,331	77,126

[1]The total consumption for each year is based on the column for 1979 consumption with the population increase and average income increase added to it for each year, giving total consumption of the following values:

1985	210,632
1990	246,845
1995	291,663
2000	338,326

[2]Assumes a population growth rate 2.5 percent until 1985, and 2.1 percent thereafter. The increase is based on 4.02 Kgs/person for each person.

[3]The Low scenario assumes a GDP/capita growth of 1 percent and an elasticity of clothing expenditures of 1.25. The High Scenerio uses the same elasticity but a 2 percent growth rate. The Average is the simple average of the first two scenarios

Source: Compiled by the Author from Chapter 3

for different firm-groups in the subsector. Anything could happen to population growth rates, but the difference in a 2.4 percent versus 2.1 percent compound rate would be about 12,000 MT, which would not affect most outcomes. A wildly high income growth of 3.0 percent per capita would lead to a much higher quantity -- a net increase of over 100,000 MT -- but this would be almost beyond belief given the economic difficulties experienced in Egypt at this time and would probably be offset by a drop in the elasticity.

The total consumption is shown in Column 5. Based on the assumptions used, it represents a middle to low figure for consumption growth. It is hard to be optimistic about higher figures under the current circumstances, but hopefully lower figures would only come from a faster reduction in population growth.

7.2.1.1 The Implications of Using Volume Statistics to Predict Demand and Supply Responses. In this research little has been said about the details of different products, with the exception of one table in Chapter 4 showing fairly aggregated volume statistics and the detailed analysis of the products produced by the tailors and dressmakers in rural and urban areas. Otherwise, the demand analysis in Chapter 4 allows for quantitative projections of the kilograms of cloth and clothing consumed as income and population changes.

The validity of the conclusions in this chapter depend on, in addition to the validity of the estimates, the validity of several assumptions that are implicit in the use of the kilogram projections. First, the amount of cloth required to clothe a given population must be fairly stable -- i.e the wardrobe must be fairly stable as the population grows -- and the kinds of clothes demanded as incomes increase must use the same amount of cloth and proportions of knit and woven fabrics.

Changes in these proportions will mean that the coefficients of volume use with growth in population or income will err because they ignore these changing patterns. Secondly, all firms must be able to produce most if not all of the clothes, so that any excess profits earned within a certain product line will be competed away relatively quickly; returns will average out across product lines, and larger issues will determine the existence of the firms.

Do these assumptions appear to be reasonably true or not? First, the national wardrobe will change according to the relative growth of different population groups. However, one could argue that these average out across several different groups and will only reflect a small change in the use of cloth. Also, given the small increases in income anticipated and the currently low levels of consumption, an hypothesis that consumers will simply add more of the same products rather than undertake dramatically different consumption patterns might be sustainable. This is pure speculation and other assessments are possible.

The validity of using quantity projections also depends on most firms being able to move in and out of product lines as relative demands change. They must be able to adjust proportions and earn an average market rate of return on inputs. There are, to be sure, several product lines -- knitted goods, pants, and brand name Western goods -- that are hard to move in and out of due to specialized machinery or to the barriers to entry imposed by branding, but most of the clothing styles can be made from standard cloth and with standard sewing machines. It may well be that the more difficult products increase in importance as the transition to the modern system occurs. However, a typical firm in the modern system could adjust the number of lines of shirts and pants

they produce, and minor variations in the products can be handled by adjustments in the lines they already have. Weavers can fairly easily expand into some knitting or adjust the proportions of their capital as needed. These statements are especially true for the larger firms. Likewise, branded products are not immune to competition from other brands. Thus it appears that the use of quantity measures will be adequate for many inferences about the evolution of the different industries.

Nonetheless, it would be quite useful to understand at a more disaggregated level what kinds of products are produced by the different RMC producers. A more detailed product line comparison between tailors and RMC producers would indicate whether they are currently in competition or are producing for quite different groups. The costs were higher for the RMC producers, but this may be because they are producing for a higher quality market or a different combination of products. In this case the transition of the system from tailored to RMC production might be dependent on major changes in the number of groups who demand the different clothing types, and the indications here might be far off the mark. It is still maintained that population and income will drive much of the demand and that most firms will be able to handle most changes in product types during the next 20 years.

7.3 The Evolution of the Industries in the Subsector.

The evolution of each of the industries and firm-groups within them is discussed in this section. There are three parts of the analysis. The first looks at the historical factors affecting the evolution of the firms to their current configuration; a second looks at

some quantitative measures of firm growth; and a third deals with the more qualitative influences affecting the evolution of the subsector. The industries are analyzed from the top of the subsector down to the industries in the lower stages because the forecasts begin with the demand projection in the previous section and are calculated backwards to the earlier stages.

7.3.1 The Evolution of the Retailing Industry

The first industry that requires explanation is the retailing industry. There are thousands of small private retailers, several hundred medium private retailers and six large public retailers with four hundred branches. Since many of these firms sell both cloth and clothing, they are treated together even though most of the original growth was clearly in cloth retailing, with the RMC retailing only beginning to be a force in the industry.

7.3.1.1 Historical Forces Affecting the Retailing Industry. Most of the large (public) retailers are chain stores that were nationalized in the Nasser era or have been started more recently. They currently handle about 51 percent of the volume of retailed cloth and clothing. It is not known whether their extensive network of store outlets is recent or old. Since these stores often seem to have the central location in many towns, it seems that they either were the earliest retailers or that the space was simply bought or appropriated after nationalization.

The rest of the retailing industry fits the pattern of retailing created when urbanization occurred prior to the rise of the automobile. The majority are extremely small firms set one against another, which is typical of many developing countries and much of Europe. The returns for

the small retailers are adequate for a good family living, but little is left over to expand. This problem is further compounded by the rent control laws, which restrict the market so that the current inhabitants have an incentive to stay and newer entrants have a problem getting space since they have to pay key money to buy into the shop. This makes the new firms' costs near market levels, but the older firms' costs are subsidized. Thus there is difficulty in expanding for the small firms because of the lack of adequate profits and also because of the difficulty in finding space that is close and of appropriate size.

Space is not the only determinant of size. One small firm that was visited had several hundred thousand Egyptian Pounds in sales, but a very similar looking firm only had one-tenth that amount. The key difference was the location of the two firms. In general the medium firms did appear to be bigger and better located. There is surely some correlation between size and location in determining sales.

It is not clear why the medium firms have become larger than the others. The firms visited seem to be more successful because of the location advantage as discussed above, or because they were early entrants with sufficient capital. This does not rule out the possibility of good business sense, luck or dedicated savings contributing to the increase the size of the firm.

7.3.1.2 Projections of the Number of Firms, Employment, and Capital Requirements in the Retailing Industry. Projecting the retailing industry has been done to see the gains in employment as the industry grows. Also, if the medium retailers increase their market share because of better profits and utilization of labor, which was shown in Chapter 4, there will be an impact on the total employment. This is also assessed.

The third issue concerns the space required by the different

firms. The actual amount of space used as the industry grows is of interest because of the urbanization pressures on the land described in Chapter 6. The cost of a transition to medium firms if they pay higher rates for space is also assessed. Finally, the transition to RMC products may create an increase in the demand for space because an inventory of RMC products may need more space than an inventory of cloth.

The products demanded by the final consumer all go through the retailing industry either as cloth or clothing. The basic projection is made by just projecting the quantity demanded in tons. The composition of that quantity is addressed later by looking at changes in the size of the RMC industry. Also, a sensitivity analysis is made to estimate the difference in space required by retailers if they sell clothing rather than cloth.

The basic projection is presented in Table 7.2. The projections of the estimated total tonnage demanded for 1990 and 2000 are broken down into the types of products sold through the retailers. In the base projection, the proportions of products sold after 1979 are assumed to be the same as for 1979, so the percentages sold as fabric, WRMC, and KRMC remain the same in both 1990 and 2000. The figures used for the consumption by final consumers are 246,845 MT for 1990 and 338,326 MT for 2000, which were derived in the previous section.

In Table 7.3 the projected number of firms and related employment are given. This set of projections is based on preserving the current market shares of all firm-groups in the industry, which are shown in the first row of the table. The total retail sales in metric tons is partitioned into the different firm-groups according to their current market share. Then the number of required firms is determined from the metric tons that the representative firm in that group utilizes. Given

TABLE 7.2

Retail Consumption of Fabric and Clothing
Projected to 1990 and 2000[1]
(Metric Tons)

1990

	Private Sector	Public Sector	Total
Fabric	86,889	90,345	177,234
Woven RMC	15,058	20,982	36,040
Knitted RMC	16,539	17,032	33,571
TOTAL	118,486	128,359	246,845

2000

	Private Sector	Public Sector	Total
Fabric	119,091	123,827	242,918
Woven RMC	20,638	28,758	49,396
Knitted RMC	22,668	23,344	46,012
TOTAL	162,397	175,929	338,326

[1]Based on Table A2.7, which gives the proportions of volume for the public and private sectors and for the type of product

Source: Compiled by the Author

the number of firms, the total employment can be calculated using the figure for the employees per firm in the third column.

The projected figures are given for 1990 and 2000. The small firms add about 18,000 employees during each 10 years of growth; the large firms add about 1,500 employees and the public sector adds about 1,300 employees, if the market shares are maintained. These figures are dependent on the starting market share of each firm-group and also on the number of employees per metric ton of sales, which exhibit strong economies of size. Those size economies are indicated by dividing the second line by the third line.

The small firms include both the itinerant retailers and also the very small fixed retailer. The evolution may well differ for these two types of firms, but they are grouped together for the present.

Several alternatives to this scenario can be sketched in simple analyses. All of the firm-groups are growing at about 40-50 percent per decade, since the proportions of everything are fixed. In reality, many things will change, including the distribution of firm sizes.

The growth potential of each of the different firm-groups will determine which groups expand the fastest. In Chapter 4, the small firms were shown to be at a considerable disadvantage compared to the larger firms since they were only able to finance about one-third of their capital costs within five years, including financial credit. The larger firms have the available resources to add 75 percent to their capacity with five years of profits and outside financing.

The figures for the public sector were not tabulated, but if their profitability is related to the efficiency of labor use, they would have a large potential for reinvestment. However, what the holding organizations would do with repatriated profits is open to question. If

TABLE 7.3

Numbers of Textile Retailing Firms and Employment
Projected to 1990 and 2000
By Size of Firm

Egypt, 1979

Item	Firm Size			
	Small[1]	Medium	Public Sector[2]	Total
1979[3]				
% of Industry	39.0	9.0	52.0	100.0
MT/Firm	3.82	45.7	14,308	x
Employment/Firm	1.93	8.0	667	x
1990				
Metric Tons Used	96,270	22,216	128,359	246,845
Firms	25,201	486	9	25,696
Employment	48,639	3,889	6,003	58,531
2000				
Metric Tons	131,947	30,449	175,930	338,326
Firms	34,541	666	12.3	35,219.3
Employment	66,664	5,330	8,204	80,198

[1]Includes itinerant and fixed location retailers.
[2]This is only the textile retailing of the Public Sector.
[3]These ratios are calculated from Table A2.7 and Table A3.19

Source: Compiled by the Author

the public sector could double its size twice during the 20 years of the forecast, they could devour the entire retail sector. They would be able to handle 343,392 MT of textiles in 2000, while the total demand would be for only 338,326 MT. To supply that demand would require 23.6 firms of the current size in the public sector and 15,772 employees. Since the private sector's 71,994 employees in the year 2000 would be lost, there would be a net loss of 64,426 jobs under this alternative scenario. This is not that far-fetched since it would only require a 7.2 percent return on assets to finance this growth, which is moderate given the 8.4 percent and 12.5 percent returns earned by private retailers.

The medium firms in the private sector are able to expand more quickly than the small firms but from a much smaller base. If the medium firms doubled every ten years and took all of the market share from the small firms, they would sell 28,961 MT of textiles previously sold by the smaller firms under the base scenario. This second scenario would result in the loss of 14,632 jobs relative to the base scenario. It is conceivable that the larger RMC producers might go into retailing to hasten the transition to ready-made clothing, so there is some possibility of outside capital flowing to the medium sized private sector firms, allowing them to increase even more quickly.

The final discussion is about the retailing industry's capital requirements for expansion, which is shown in Table 7.4. The additional space needed to handle the increased retailing volume is provided for two scenarios. The space needed stays the same in both scenarios, but its cost varies for medium sized firms. These firms might pay more for space either because they require larger parcels which have higher per unit costs given their scarcity, or because they need better locations to justify the investment in a larger area.

TABLE 7.4

Two Scenarios for Land and Building Requirements
in the Retailing Industry in 1990 and 2000

By Firm-group

	Base Scenario			High Cost Space For Medium Firms		
	Small Firms	Medium Firms	Total	Small Firms	Medium Firms	Total
1990:						
Spaced Required	175,500	24,300	199,800	175,500	24,300	199,800
MT per M^2	600	1,200	x	600	2,400	x
Total Value	105.3	29.2	134.5	105.3	58.3	163.6
2000:						
Spaced Required	239,927	33,300	273,227	239,927	33,300	273,227
MT per M^2	600	1,200	x	600	2,400	x
Total Value	144.0	40.0	184.0	144.0	79.9	223.9
Increase from 1990 to 2000:						
Spaced Required	64,427	9,000	73,427	64,427	9,000	73,427
Total Value	38.7	10.8	49.5	38.7	21.6	60.3

Source: Appendix 3

The space required is given for the small and medium firms for 1990 and 2000. The cost of that space is determined by multiplying the cost per meter, including both land and building costs, by the number of square meters required. In the first scenario the cost is LE 600 for the small firms and LE 1,200 for medium retailers. In the second scenario the cost of space for the larger firms is raised to LE 2,400 to reflect the increased costs discussed earlier. The most important figures in this table are the incremental costs of space, which are LE 50-60 million for each decade's increase. The 73,427 extra meters needed for the space represents only 18.5 acres, but it is acreage that is in the prime commercial sections of cities. It is clear that the 100,000 acres lost to urbanization reported in Chapter 6 is not being used for textile retailing.

This investment is large, and it is higher than necessary because of the prevalence of small firms who use more space for a given volume. The added cost, even if the medium retailers pay substantially more, is not great because they are a relatively small part of the system. However, some of the space will be converted from other uses that may be of less value, so not all of the space would require the investment that is used to create the retailers' budgets in Appendix 3.

If there is a transition to a system that sells mostly ready-made clothing, one of the key questions is about the cost of space. As an illustration, suppose that the space required to sell a particular tonnage of clothing is double that required for cloth. Currently about 75 percent of the total tonnage is sold as piece goods and 25 percent as clothing. For each 25 percent change in these proportions, it would require 25 percent additional space. (It may be that the space required far more than doubles because more styles and sizes have to be offered, and the

storage methods are far less efficient than storing cloth in bolts.) The extra space would add an extra LE 12.5 million to the cost of land and buildings for each 25 percent increase in tons sold of RMC products. Thus, if the system would convert to 75 percent RMC and 25 percent piece goods, the additional cost per decade for retailing space would be about LE 25 million. With all RMC production, it would increase the cost by LE 37.5 million. (These figures are based on the Base Scenario in Table 7.4.)

7.3.1.3 The Future Evolution of the Retailing Industry. The main forces of change in the retailing industry are related to the transition from small to large firms, either in the public sector or the private sector, and the separate transition from an industry that mainly retails cloth to one that retails clothing. The basic forces influencing these transitions are discussed below, followed by a summary of the anticipated evolution of the subsector.

There are several conflicting forces affecting the retailing industry's transition to a structure of large firms. For a number of reasons the larger private sector firms have an advantage in profitability. Larger retailers are more able to contract directly with weavers to bypass the wholesaler; they can also split the rents earned from that transaction and get a higher mark up for cloth. Additionally, the larger retailers will be able to place bigger orders to large RMC producers, so they should get cheaper products, reflecting the economies of size in production and in transactions.

The public sector retailer also has the potential to influence the relative proportions of large and small firms in the subsector because of its dominant position and vertical relationships with other public firms. It may be able to use its preferential position to get access to better

sites, and it might be able to get financing from the other public sector firms if necessary.

The larger firms in the public and private sectors may have a comparative advantage in growth due to their ability to use a wider variety of advertising media; with larger volume it is possible to use television, radio, and newspaper advertising in a profitable way. This may allow them to influence their clientele more than the smaller firms can and to gain some degree of control over the growth of their sales through brand loyalty.

The strongest influences seem to be in the areas of economies of size related to space and labor utilization. There was some evidence put forth that the larger firms could handle the growth in demand with far fewer capital resources but with a loss of total employment in the industry. The magnitude of these conclusions are hard to determine; but in space, labor, and possibly inventory costs, the larger firms operate at lower cost. In addition, they have relative bargaining power in dealing with the larger firms lower in the subsector. Thus, a prevalence of larger retailers seems to reduce costs, but the gains have only been crudely assessed in this research.

There are several forces that mitigate against these tendencies, at least in the private sector. The first is the rent control legislation, which has frozen rents at 1964 levels and made it very hard to evict tenants. Therefore, a large part of the potential retailing space is tied up by users who are benefitting from the controls. The retailing firms began small due to capital constraints, and remain so, and thus only small units are vacated at a time. These are then rented at somewhat higher rates, including key money, so there is a continuing patchwork of available retailing space. Thus it is much easier to start a small

retailing firm than a large retailing firm. The large retailers that do exist probably earn rents because efficient competitors face a barrier to entry. They can add networks of smaller units but gaining access to large units will be difficult. Capital is still a constraint, further adding to the ease of starting small retailers.

7.3.1.3.2 Incentives for Retailing Ready-made Clothing. The retailing industry has a number of incentives to retail more ready-made clothes, but there are also some disincentives. The asymmetry of regulations may be one of the most important factors. There was a clear and known limit on the mark up for cloth sold by retailers, but the sales of ready-made clothing are not controlled, so the mark up will be what the market bears. A mix of mark ups on different items should allow firms to make better profits through price discrimination tactics. Thus the regulations cause the firms to move towards RMC products.

Secondly, the nature of the RMC industry beneath the retailers may also play a role. The large private RMC producers make good profits and, with productivity increases, will be able to supply much more than is currently being supplied, perhaps more than the consumers really are interested in purchasing. Therefore they have an interest in "influencing" the retailers to sell clothing as opposed to cloth. This may occur through direct vertical integration by large firms, but it may more likely be influenced through incentives offered by the RMC producers. These may be in the form of discounts or perhaps a willingness to consign inventory or possibly to delay credit terms. Thus, through a system of incentives, the RMC industry is likely to push retailers to offer more RMC products.

Finally, RMC products may represent an image of progressiveness in the subsector. The public sector retailers display ready-made clothes

prominently in their shops. The more progressive RMC producers have contacts with Europe and view this movement as progressive. There are also government committees and newspaper stories promoting the expansion of RMC clothing capacity. Therefore, the image of a modern subsector is based on ready-made clothing in the eyes of many people.

Offsetting all of these tendencies towards ready-made clothing production are the obvious needs of many consumers for piece goods so they can get more clothing for their money. The existence of the popular supply cloth program also allows piece goods to remain as the major products of the system. In the longer run, there is the constraint that a larger amount of space may be required to service the population's clothing needs in the form of ready-made clothing .

In summary, the retailing industry is restricted from moving to low-cost, larger scale retailing because of regulations and the lack of capital, as well as severe constraints on the availability of space. While having the retailing industry evolve into many small firms will add to employment, it will be quite costly in terms of the capital required. This problem will probably be exacerbated by the tendency of the industry to move to selling more ready-made clothing. That movement will further add to the cost of the space if selling ready-made clothing requires a greater area than selling piece goods.

The retailers can be seen as bottlenecks that may be very important factors slowing the introduction of the modern system. The general shortage of space and the related congestion means that the cost of retailing is likely to be made higher by an evolution toward a high cost system of small firms, thereby slowing the reduction in the costs of providing ready-made clothing.

7.3.2 Evolution in the Wholesaling Industries

The wholesaling industry in 1979 included about 540 small firms and about ten large firms in the private sector, with few if any medium sized firms. The public sector is made up of two large firms that handle 3.5 times as much volume as the entire private sector. Wholesalers provide several important functions, especially for the smaller firms: they permit cost reductions in weaving and variety in retailing by aggregating retailers' demands and then giving large cloth orders to weavers; secondly, they may provide working capital to the system through trade credit; they may also play a role of information provider to lower stages because of their ability to determine the proportions of cloth needed; and they have the capital to act as jobbers to control the composition of output.

The past evolution of the wholesaling industries is difficult to surmise from its current configuration of a few small and large private sector firms and dominance by two large public sector firms. If large wholesalers have the economies of size estimated in this research, then there should be a relatively large group of larger firms, some medium firms, and few if any small firms left. Yet the small wholesalers seem to be most prevalent, followed by a small group of larger firms. It is quite possible that the larger and older firms were either nationalized or lost their source of product when the weaving firms were nationalized, and they therefore went out of business. The current larger firms may have been medium firms at that time or had connections that allowed them to continue in existence. The smaller firms may provide a convenience for retailers since they have many outlets, which the larger wholesalers do not have.

At the present time, regardless of what has produced the

distribution of firms, much of the system does not require the private wholesaler's talents. About 42 percent of the total cloth which is not exported goes from the public weavers to other public sector entities and is coordinated through some kind of administrative transaction. A further 28 percent goes from the public sector to the private sector through the public wholesalers and is out of reach for private wholesalers. Part of the remaining 30 percent is produced by large or medium weavers and sold to large RMC producers or to retailers and so does not require a wholesaling firm. The private sector wholesaling industry is currently small, its mark ups are regulated, and the trends in the other stages are away from requiring a wholesaler. Thus the future is not bright for any but perhaps a few of the larger firms. However, the consequences for the system are small, since the firms provide little employment and tie together firm-groups that are also not unusually significant.

There are several final issues that do warrant discussion in the event that the wholesalers die out. Given the prevalence of medium weaving firms in the private sector, the markets between the weavers, the retailers and the RMC producers might be less than perfect. The nationalization has diverted the wholesaling industry from its natural evolution. In addition, the regulations on mark ups may have caused a more rapid decline in the industry. Thus there may be a group of medium sized weavers and small retailers who would benefit from wholesaling to maintain their competitiveness. This may result in vertical integration between the weaving industry and some of the remaining large private wholesalers. It may also cause a decline in performance in some of the smaller firms as they are unable to provide low-cost production without access to wholesalers.

7.3.3 The Evolution of the Garment Making Industries - Tailors, Dressmakers, and Ready-made Clothing Producers

In this section, the past growth of the RMC firms is analyzed, followed by the forces affecting the tailors. Since they are inevitably affected by each others' actions, the projections for these two groups are made together in a third section. A fourth section presents some alternative scenarios for the projections, and several final qualitative dimensions of the future evolution are presented in the last section.

7.3.3.1 The Past Growth of the RMC Firms. The firms in the RMC industry exhibit yet a third structure. The large private firms dominate the industry, and a large number of small and medium firms together only produce as much as the large firms. If the natural evolution of the subsector is to go from small to large, it would indicate that at some period in the past there was a flurry of RMC firms started, which are now the large firms. Then a group of new firms may have started later, again at a smaller size.

This industry structure might be plausibly explained using the following synthesis. There has been some demand for ready-made clothes for quite a long period, probably mostly for Egyptian and colonial military uniforms, and for the French and British department stores, which were nationalized during the Nasser era. In addition, some of these RMC firms, along with some new ones, were able to produce for export to the Eastern bloc during the Nasser era when the Soviet bloc and Egypt were allies. The firms that supplied this output have a long history and have had time to gain some size and proficiency. Thus, the original group of RMC firms are now the medium and large firms, with the small RMC firms being the latest arrivals.

The second wave of RMC producers probably were started during the outward look to the West that occurred during the 1970s, beginning with President Sadat's opening of the economy. The demand for ready-made clothes may well have increased rapidly due to rises in income and changes in preferences, so the opportunities for tailors to convert to retailing and work in RMC production outside of their main shop expanded the ranks of the small RMC firms. The more successful were able to grow to the medium sizes and in some cases to move to a large firm. Also, some the the larger firms have probably bveen started recently as a result of the Law 43 incentives that brought large blocks of capital into the industry.

7.3.3.2 Forces Affecting the Tailoring Industry. The size of the tailoring industry is mainly influenced by the economic forces at work, albeit conditioned by the rules and regulations of the economy and the way that historical and political factors have influenced it by effecting the adjacent industries in the subsector. The existence of the piece goods industry, the willingness of Egyptian consumers to wait for clothing products, and the low cost of tailors relative to the fledgling RMC industry make tailoring and dressmaking viable enterprises.

The different categories of tailors were shown to have different returns, indicating that some market segmentation seems to exist. In Chapter 4, the sales by product line were reported, which showed the dependence of rural producers on traditional garments. (Rural dressmakers received 47 percent of their sales value from gelebeyas.) It may be that this segments low income from higher income consumers, and the returns are low because they are stuck in a low income market. There may also be some skill differences involved because the modern products are made with a closer tolerance that requires more skill. Urban tailors are far more profitable than rural tailors, primarily due to prices, not to the volume

produced. (In fact, the dressmakers are almost as productive in terms of units produced as the urban tailors.) Also market segmentation occurs between men and women, and since the female producers have a lower opportunity cost of time, they are paid less because they cannot move into the higher-priced male market.

The second issue, which is more of an organizational issue, refers to the prevalent size of firm. Why are there not large tailoring or dressmaking firms? Probably the most fundamental reason is that to gather enough demand, the tailors and dressmakers must be spread through the population. Also, people do not take their cloth to tailors they do not know. They need to have personal knowledge about the tailor, which, in a system with problems of communciation and transportation, usually requires local contact. Also, people must be able to get to the tailor and return conveniently because they have to make multiple trips to get the finished product. Urban tailors are an exception to this discussion in that they have a clientele from a wider area.

By definition, the tailor combines production and retailing, so the production facilities have to be spread out following the dispersed demand for clothing. Because tailors often produce only on demand and not for inventory, they have little control over when they produce. They are likely to experience somewhat erratic demand from this relationship with the final consumer. Because of this nature of demand, the whole garment production method is appropriate because of its ability to keep a few people employed with relatively low fixed costs, although with lower labor productivity.

With production on demand, it is hard for firms to gain markets by changing strategies or investing to expand. Therefore, an hypothesis is that the owner will take more work and pay assistants less.

TABLE 7.5

Projected Numbers of Firms and Employment
in the Ready-made Clothing Industry in 1990 and 2000

By Size of Firm

Item	Small	Medium-Small	Medium	Large	Public Sector	Total[1]
	.....Firm Size.....					
For 1979:						
MT/Firm	2.1	19.3	57.9	111.1	604.2	x
Laborers/Firm	3.0	25.0	75.0	150.0	1,050	x
Market Share(%)	10.6	12.0	18.0	34.4	25.0	
For 1990:						
Metric Tons	3,820	4,325	6,487	12,398	9,010	36,040
Firms	1,819	224	112	112	14.9	2,282
Employment	5,457	5,600	8,400	16,800	15,645	51,902
For 2000:						
Metric Tons	5,236	5,928	8,891	16,992	12,349	49,396
Firms	2,493	307	154	153	20.4	3,127
Employment	7,479	7,675	11,550	22,941	21,420	71,065

[1] Totals may not add due to rounding

Source: Appendix 3

This would mean that there is some incentive for workers to leave the firm gain better wages, and consequently, the tendency is for the industry to stay small and dispersed. Thus the tailor appears to be constrained by demand and may not receive more business just by decreasing prices because of the difficulty in finding new clientele.

7.3.3.3 Projections of Firm Growth and Employment in the Garment Making Industries. Projections for the RMC producers and for the tailors and dressmakers are interdependent and are figured together in this section. The baseline projections for the RMC producers are contained in Table 7.5. The total production required of the RMC industry is determined by the tonnage sold through the retailers. In the "no change" projection, each firm-group is expected to handle the same proportion of production as in 1979, which is shown in the third line of Table 7.5.

The amount of product and number of laborers used by each of the representative firms is assumed to stay the same for later years. The numbers estimated from the 1979 coefficients are given in the table for 1990 and 2000. These coefficients are used to calculate the number of firms and the amount of employment in the projections. In 1990 the total employment in the ready-made clothing industry is estimated at 51,902 and by 2000 it grows by slightly less than 20,000 to 71,065. Again, firm numbers are hard to interpret. Certainly the number of firms will not be in the same proportions as in 1979, and there will be an evolution of firm structure.

A similar procedure is used to estimate the number of tailors and dressmakers that would exist under the "no-change" scenario. Table 7.6 is structured as the earlier tables, holding the proportions of total volume constant for each group in future years and using the 1979 firm labor and tonnage figures to estimate the employment and number of firms.

TABLE 7.6

Projected Numbers of Tailors and Dressmakers
and Home-fashioned Fabric Used in 1990 and 2000

By Rural and Urban Location

Item	Home-Fashioned	..Dressmakers.. Rural	Urban	.....Tailors.... Rural	Urban
For 1979:					
% of Fabric Used	56.5	15.5	8.1	7.6	12.3
MT/Firm	X	.24	.21	.24	.27
Employment/Firm	X	1.47	2.11	1.85	2.52
For 1990:					
Metric Tons Used[1]	76,404	20,961	10,954	10,277	16,633
Firms	X	87,338	52,162	42,821	61,604
Employment	X	128,387	110,583	79,219	155,242
For 2000:					
Metric Tons Used[1]	104,721	28,729	15,013	14,086	22,798
Firms	X	119,704	71,490	58,692	84,437
Employment	X	175,965	151,558	108,580	212,781

[1]Non-garment uses have been excluded (23.7% of total cloth production.)

Source: Chapter 3, Tables 3.3 and 3.4

To determine the proportions of products that each firm-group will produce, it is necessary to begin with the total amount of fabric projected to be sold through the retailers, which is 177,234 MT in 1990 and 242,918 MT in 2000.

These figures include some non-garment related uses, which were estimated to be 23.7 percent of the total in 1979. The figures in the first row of Table 7.6 show the proportions of the garment-related cloth that is used by each of the firm-groups. One of the firm-groups is the consumer himself when he does home-fashioning. That accounts for 56.5 percent of the cloth used in the traditional system.

Total employment for 1990 in this industry is estimated to be 473,431, and in 2000 it might be 648,813 workers. This translates into a growth of about 175,000 jobs in the traditional sector each decade, making this industry the most likely to provide employment in the subsector if the system evolves in its present form. The actual number of firms is more amenable to interpretation than in the other industries because the firm size of tailors will remain about the same as the industry grows.

7.3.3.4 Alternative Projections of Employment in the Garment Making Industry. The base scenario of no change in the relative importance of firm-groups is only one of several possible evolutions. The interdependence between RMC producers, tailors and dressmakers, and home production means that the evolution will be affected by many different changes. The first analysis is done to determine the implications if the RMC industry expands at its maximum capacity. This analysis is presented in Table 7.7. The first row of that table shows the potential expansion per decade of each firm-group, which is based on a doubling of the number of firms each decade.

TABLE 7.7

Projected Maximum Possible Expansion in the Ready-made Clothing Firms in 1990 and 2000

Egypt 1979

By Firm Size

	.....Firm Size.....					
	Small	Medium	Medium-Large	Large	Public Sector	Total
Coefficients:						
Expansion Factor[1]	2.00	2.00	2.00	2.00	2.00	X
Employees/Firm	3	25	75	150	1,050	X
MT/Firm	2.10	19.3	57.9	111.1	604.2	X
For 1979:						
Firms	1,222	150	75	75	10	1,532
Employees	3,666	3,750	5,625	11,250	10,500	34,791
Output (MT)	2,566	2,895	4,343	8,333	6,042	24,179
For 1990:						
Firms	2,444	300	150	150	20	3,064
Employees	7,332	7,500	11,250	22,500	21,000	69,582
Output (MT)	5,132	5,790	8,685	16,665	12,084	48,356
For 2000:						
Firms	4,888	600	300	300	40	6,128
Employees	14,644	15,000	22,500	45,000	42,000	139,144
Output (MT)	10,265	11,580	17,370	33,330	24,168	96,713

[1]Indicates a doubling every ten years. See Text.

Source: Appendix 3, Table A3.13

By 2000, the RMC producers are able to process 96,713 MT of cloth and also to provide 139,144 jobs. If all firms but the smallest were able to improve their quite poor productivity during the next 20 years, to double their output per laborer, it would be possible for the RMC industry to process 193,426 MT in 2000 with the same number of employees.

The firms could expand much more rapidly than doubling every decade, but it is clear that this would result in eroding profits because the demand will not increase anywhere near that fast. To gain market share the RMC firms will have to use many different strategies, and many will cost them profits. The estimate used here is simply illustrative of what will happen. The number of firms, employment and total output of the firm-group are presented in this Table 7.7 for 1979 and projected based on the expansion factors for two decades.

Table 7.8 includes four alternative scenarios that show the impacts on employment and production of clothing when the amount that is home-fashioned, processed by tailors, or produced by RMC producers varies. The first scenario is the base scenario, which simply brings together the figures from the projections done earlier for each of the industries. The second scenario assumes that the RMC production reaches its maximum capacity using the figures for expansion given in Table 7.7. (The methods required -- price decreases, changes in buyer behavior, or RMC influences on the retailing sector -- are discussed in the following sections. Here it is assumed only that they are able to get the market share.) The third alternative shows the impact on tailors and dressmakers if half of the home production is shifted to them, and the fourth shows the results if that same volume of home production were changed to purchases of ready-made clothes. All four scenarios assume the same demand evolution that was used in the earlier projections.

TABLE 7.8

Total Employment and Output for Ready-made Clothing and Tailoring Firms under Alternative Scenarios in 1990 and 2000.

By Type of Firm

Scenerio	Home Fashioned (MT)	Tailors' Output (MT)	Tailors' Employment (#)	RMC Output (MT)	RMC Employ (MT)
Base Scenario:					
1979	51,025	39,356	316,939	24,179	34,791
1990	76,404	58,825	473,431	36,040	51,902
2000	104,721	80,626	648,883	49,396	71,065
RMC Dominant:					
1990	76,404	46,509	374,310	48,358	69,58
2000	104,721	33,309	268,073	96,713	139,144
50 Percent Home-fashioned to Tailors Output:					
1990	38,202	97,027	780,886	36,040	51,902
2000	52,361	132,986	1,070,228	49,396	71,065
50 Percent Home-fashioned to RMC and a doubling of productivity:					
1990	38,202	60,530	487,153	72,537	69,582
2000	52,361	0	0	182,383	116,123

[1]Less than 50% of home-fashioned can be absorbed by RMC firms and is assumed to be temporarily handled by tailors. Also, productivity grows at 50% per decade to slightly more than double.

Source: Compiled by the Author

The results of these scenarios are quite dramatic. If the second scenario were to occur, in which the RMC firms reinvested their profits at a maximum rate, and demand were to increase only at the average rate assumed, then the RMC production would take away most of the market share of the tailor and dressmaker by 2000. There would be a net gain in employment in the RMC industry of 68,079 relative to the base scenario, resulting in a net loss of employment of 312,681 jobs.

In contrast, if the RMC industry stayed the same and the half of the consumers who had fashioned garments at home decided to use tailors instead, there would be a net gain of 421,405 jobs in the tailoring industry. The final scenario shows the worst case from the perspective of employment, in which the RMC industry is capable of doubling productivity per worker over the 20 years while at the same receives half of the production previously done at home by 2000. The entire production would only require 116,123 jobs in contrast to the employment of 1,141,353 in the third scenario.

These scenarios, which are searches for the extremes, point to several important factors in the outlook for tailors and dressmakers and for employment in the subsector altogether. The RMC industry could take away the entire market share of the tailors and dressmakers, given its current profitability and size, without further infusions of capacity from the outside if several assumptions about their abilities to take over markets are valid.

A second point is that what happens to the home producers is extremely important for the outlook of the industry and the demand that goes to different garment makers as well. Finally, the actions of the public sector, which have not been highlighted in these scenarios, can play a big part. They might be able to expand rapidly into RMC

production using the pool of investible funds that are found in the integrated system. Also, they can influence the move to RMC versus piece goods retailing through their large and visible retailers and their control of the wholesaling and weaving functions.

7.3.3.5 The Future Evolution of the Garment Making Industries. In the absence of forces reshaping the industry, the tailoring industry would remain composed of small firms and the RMC industry would continue to be dominated by larger firms. The projections showed that most of the likely changes will result in a larger RMC industry at the expense of the tailoring industry. This section looks at the main factors which might cause this transition.

The ability to expand and the cost of production are two of the most important factors in determining the transition. The estimates of costs showed that presently the RMC firms are roughly as productive as the urban tailors, but the other tailors and dressmakers are currently lower cost producers. This calculation was based on the analysis of the value added required in each stage, including all production and distribution steps. The source of the tailors' and dressmakers' low-cost production appears to be the use of low-cost resources in production and retailing. They have high costs in some categories, due to poor labor productivity, inefficient use of raw materials and the need to have consumers purchase cloth through a retailer. (Because the urban tailor makes a different product than the other tailors, he may have a more durable niche despite the conclusions offered here.)

Despite this competitive advantage of the tailor, the RMC industry is able to expand more rapidly because of its business organization, which uses more managerial effort and capital and whose profits are retained so individual units can expand. Gains from size economies will

occur, so the retained profits from larger firms should be higher. This gives them a greater expansion capability and also the ability to attract skilled workers, pay for advertising, or purchase retailing outlets. If the retailing industry increases its average firm size, the cost of retailing clothing should decrease, and the total delivered cost to the consumer will decrease relative to the tailor's costs. Other things being equal, the public sector will gain the most from the economies of size because they have the largest firms.

Besides the issues surrounding costs, other factors affect the rate of the transition from a piece goods system to one based on RMC production. There are also several behavioral issues. The transition will be slowed because there is some degree of consumer learning required, if RMC products are to become the basic output. This includes having consumers get used to grades and standards and know which sizes fit them for which styles of clothing. There may be some changes in tastes and preferences required if the traditional clothes are hard to make in RMC production facilities. (Most of the techniques for the modern system are based on the modern clothes and there may be some difficulties in adapting the system to the traditional clothing.) The consumers and retailers will have to find an acceptable credit and reference procedure to stand in place of that given by the tailoring industry. In that transaction, the purchase of clothing by low income consumers matches their income flows, which are slow and small. Finally, there may be special satisfactions related to the transaction between the tailor and the consumer, such as personal attention or local images of good and bad tailors, which make the transaction more interesting than with the clothing retailer. On the other hand, the time involved will make the transaction more costly so the benefits of using a clothing

retailer will be higher as incomes rise in the future.

These considerations will have the impact of slowing the transition to ready-made clothing and increasing the difficulty of estimating the rate of the transition. The transition is likely to be slower at first since there is much uncertainty and lack of consumer knowledge. As the uncertainty is reduced the RMC firms will benefit, and larger orders from retailers will allow more economies of size to be achieved. This will add to the competitive advantage of the larger firms. Until that happens, there will be some advantages for the smaller and more flexible ready-made firms, although they will need a large advantage to gain much market share.

The government can influence the transition as well. The regulations on mark ups of cloth at the retail level will hasten the movement towards RMC production. Also, the control over investment and the resulting lags in getting capacity on line in the RMC industry could result in excess capacity based on optimistic expectations. The Worker's Project, the ministerial committees to promote ready-made clothing production, and the flagship stores filled with mannequins and RMC production may further the possibility of overcapacity, and increase the desire to move to a modern system with ready-made clothing production.

The evolution of the garment making industries is affected by actions in other industries as well. The retailing industry will probably be an impediment to the transition because the small firm size and hypothesized high cost of small retailers will make RMC products more costly. The profits from the RMC industry may be used to promote their products with retailers. Also, it is quite likely that a wholesaling industry between larger RMC producers and the small retailers might evolve so producers can achieve low-cost production runs and also

accomodate the small retailer, who will be prevalent for many years.

In addition, the quality of yarn produced by the spinning firms will affect the ability of RMC producers to produce export quality products. This in turn will affect how fast the domestic transition takes place. With higher exports, the transition in the domestic markets will be slower, and the tailoring industry will be a force for a longer time. Also, depending on the transition, a different set of external industries will be affected. For example, with a dominance of larger RMC producers, the advertising, construction, and retailing industries will benefit.

7.3.4 The Evolution of the Weaving Industry

The private sector weaving industry is made up of 130 small firms with two looms per firm, a major group of 510 firms with an average of 25 looms per firm and a small group of large firms with 100 or more looms each. The public sector has 21 firms with over 1,000 looms per firm. What describes the evolution of the system so that it looks the way that it does, and which "system" do the different firm-groups belong to?

Clearly, the public sector firms are a result of the large firms put in place in the 1930s and the subsequent wave of nationalization. The private sector appears to be a result of natural evolution. The bulk of the firms, the medium sized firms, were probably started at the same time as or earlier than the large firms that have been nationalized and have grown through the natural expansion of a moderately but consistently profitable industry, as estimated in Chapter 4. The large firms either started large from larger pools of capital or were relatively more successful. The small firms are either the marginal firms, firms that

TABLE 7.9

Projected Numbers of Weaving Firms
and Employment in 1990 and 2000

By Firm Size and Type

	Private			
	Small	Medium	Large	Public
For 1979				
% of Industry	.5	25.8	2.4	71.3
Metric Tons/Firm	5.9	86.5	415.6	6,416
Employment/Firm	6	78	375	5,947
For 1990				
Metric Tons Used	1,234	63,686	5,924	176,001
Firms	209	736	14	27.4
Employment	1,254	57,408	5,250	162,948
For 2000				
Metric Tons Used	1,692	87,288	8,120	241,226
Firms	287	1,009	19.5	37.6
Employment	1,722	78,702	7,313	223,607

[1]Includes knitted output of the public sector

Source: Compiled by the Author

have been started recently, or they represent a specialty firm that may be tied to a retailer.

7.3.4.1 Projections of Firm Growth and Employment in the Weaving Industry. The weaving industries are projected like the other industries, by holding the market shares of 1979 constant and estimating the amount of cloth required in 1990 and 2000 using the same projections of demand given in Table 7.2. The estimated weaving output of the domestic weavers is 246,845 MT in 1990 and 338,326 MT in 2000. The public sector and the medium sized private sector firms are most important. In fact, it seems unlikely that the small and large private firms will be very important during the medium run. Total employment in the industry reaches 226,860 in 1990 and 311,344 in 2000 for a growth rate of 84,484 jobs per decade. (This includes knitted output as well.)

Several alternatives are worth mentioning because they affect the evolution of the weaving industries. First, about 9.6 percent of the output was exported in 1979 (Appendix 2, Table A2.4.) If this amount were to remain the same for each of the projected years, then an additional demand of 20,733 MT and 28,341 MT would be added in 1990 and 2000 respectively.

The demand projections lead to a need for a 37 percent increase in capacity for each decade. The analysis of the profitability of the firms in Chapter 4 indicates that the medium firms, the core of the industry, may have some trouble expanding with only an 8.3 percent return on assets.

It is reasonable to expect productivity gains in the weaving industries since, while the situation is fairly good relative to international standards, there is room for improvement. If the employment per metric ton of output were to improve by 10 percent by the

year 2000, the employment in 2000 would be 280,210 compared with the 311,344 employment in the base scenario, which is a reduction in employment of 31,134. Thus the estimations for employment growth are quite dependent on the growth in productivity. Since a 10 percent improvement over the next 20 years from a low base should not be hard to implement, it is possible the industry could provide the needed output with little additional employment.

7.3.4.2 The Future Evolution of the Weaving Industry. The firms in the weaving industry appear to be growing based mostly on natural economic forces, with some evident influences besides profits. The public sector has control over yarn allocation and the ability to grant increases in investment, so the private sector may in fact be smaller than it otherwise would have been. Also, with yarn allocation tied to specific looms, better firms that could get more orders and put in second shifts may have trouble doing so. The governmental control over the investment increases may have the same impact as in the RMC industry: to cause over-investment because the time lag allows more firms time to view a shortage situation and decide to invest. Unless the government decision process is adequate, there may be some tendency to overinvest. A final influence of the government is its ability to retain weaving as a predominantly public sector activity. If the public sector aggressively expands in weaving, the private sector will face contraints; while if the government restricts its efforts and tries to shrink the public sector, there will be more possibilities for the private sector.

While the medium sized firm will remain the major firm-group in the private sector, several differences will allow some of the firms to grow more quickly. Those who are able to export will face a less constrained market. Also, those who are able to connect directly with

RMC producers will be able to capture some of the rents associated with skipping the wholesaling function and will gain extra profits. Weavers who receive adequate yarn allocations will be able to increase demand and then make use of second shifts, reducing capital costs and increasing profits.

The weavers have a chance to influence the ability of the larger RMC firms to export clothes since many of the larger RMC producers will go to the private sector weavers for cloth. The weavers can organize the purchases of yarn and dyeing services, both of which are critical to producing export quality cloth. Those firms that are able to do this effectively will have a competitive advantage. They will also be a point of control in the subsector to assist its attempts to export products and increase demand.

7.4 Summary

This chapter has presented quantitative and qualitative assessments of the individual industries in the textile subsector. First, a standard projection of demand was made using an elasticity of 1.25, GDP growth rates of 1 percent and 2 percent, and a population growth rate of 2.1 percent. For each industry, the rise to the current configuration of firm sizes was then analyzed, followed by some quantitative projections of the output and employment in each industry. Additional analyses included looking at the costs of space in the retailing industry and several different alternative projections in the garment making industries.

The main conclusions were that up to 1,000,000 jobs could be lost if pessimistic outcomes occur. These included a growth in productivity

in the RMC firms and a hypothesized diversion to RMC producers of half of the demand currently done in the home, which would eliminate the tailoring industry. Alternatively, if half of the production currently done in the home is captured by tailors and dressmakers, there would be an increase in 350,000 workers above the base analysis, which assumed no change in industry structure during the 20 years analyzed. In the retailing industry, a continued evolution towards higher cost small retailers was foreseen because of the unavailability of space for larger entities, a shortage of capital available for expansion, and the fact that small firms currently dominate the industry. On the positive side, that evolution should add employment to the subsector.

CHAPTER 8

PROBLEMS AND POTENTIAL IN THE TEXTILE SUBSECTOR IN EGYPT

8.1 Introduction

The problems and potential performance of the subsector are assessed in this chapter. The main problems in the subsector arise from current poor performance in either the traditional or modern systems, or anticipated problems as the subsector changes from traditional to modern. Outlining the major characteristics presented in the earlier chapters and then inferring strengths and weaknesses is used to introduce these issues. Then the performance as the system evolves further can additionally be analyzed.

This chapter follows this procedure by first describing the essential elements of the two systems, then assessing their strengths and weaknesses. This is followed by the evaluation of the problems faced as the subsector grows and changes. The final sections make several proposals to improve the deficiencies seen from the analyses.

8.2 The Characteristics of the Traditional and Modern Systems

The major characteristics are summarized in Table 8.1. In general each system's strengths are the other's weaknesses, so this presentation is made on a comparative basis.

TABLE 8.1

Characteristics of the Traditional
and Modern Textile Systems

Traditional	Modern
(1) Flexibility given to consumers to choose tailor or home-fashioning.	(1) Variety in styles and costs, but less flexibility to minimize cost of clothing.
(2) Labor intensive, low-cost when labor costs are low, but low labor productivity.	(2) Lower cost than traditional with high labor costs and higher labor productivity.
(3) Coordinated by wholesaler and early consumer voicing of preferences.	(3) Coordinated by large firm with "good" view of the market, and direct negotiation and long-term relationships between weavers and garment makers and retailers.
(4) Lower risk because less variety and smaller firms mean quicker adjustment of industry capacity.	(4) Higher risk because of variety and tendency to excess capacity in larger, less flexible firms.
(5) Makes use of underutilized resources, and conserves on scarce management capacity and large blocks of capital.	(5) Requires professional management in many capacities and large blocks of capital.

The major issues in each of the points are discussed under the following items:

Point 1: The Flexibility to Minimize Costs Versus the Ability to Provide Variety at Reasonable Costs

Selling piece goods in the traditional system gives the consumer an option to spend money for the making up function, or to do it herself. This is a critical factor in extending a very limited clothing budget when most of the population is poor. The presentation in Chapter 3 showed that fully 34 percent of the tons of clothing was home-fashioned, an extremely high number. Also, this system is more attractive to the consumer with low income and a low opportunity cost of time. The current cash costs of the tailoring services and the cash costs of cloth make tailoring cheaper than purchasing RMC products, and home-fashioning is even cheaper. This conclusion varies depending upon whether tailors or dressmakers are used, as well as their location (See Chapter 4, Section 4.3.2.5.)

In contrast to the traditional system, buying a ready-made garment saves a consumer time since the garment can be worn from the moment it is purchased and only requires one transaction with retailers. In addition to saving time, variety has proliferated in the modern system. Large firms capturing economies of size allow increased variety at a relatively low cost when incomes (and the opportunity cost of labor) are high. Consumers can indulge in variety and the large firms can risk missing the market on certain products.

The consumers in the traditional system, by using extensive negotiation with tailors, can see quite closely the costs of additional

variety and decide whether they want it. This is harder to do in the modern retailing system where different qualities are bundled together in one price and sold in a posted price market. Furthermore, there are indications that tailors adjust prices based on the consumer's ability to pay and they offer payment terms as well. Thus, poorer consumers may have better access to garment making with this arrangement.

The styles produced in the traditional system also appear to be more compatible with the low quality of cloth and clothing. They are loose-fitting and layered so the use of a garment is extended. There is little stress on the seams and they can easily be resewn if they wear out.

Point 2: Labor Intensive versus Labor Saving Techniques of Production

The traditional system conserves on capital and makes use of labor. The average rural tailor transformed 130 kilograms of cloth into clothes in 1979, while the average RMC worker handled about 770 kilograms, more than five times the amount of the tailor (See Chapter 3 and Appendix 3 for these calculations.) The cost of capital per worker went from LE 124 for rural dressmakers to LE 4,087 for workers in the largest firms. These coefficients at the individual level aggregate to substantial differences in employment. It took almost 317,000 tailors and dressmakers to process 34 percent of the total cloth used as garments, while 35,000 workers in the RMC firms processed about 21 percent of the total cloth 1979. These figures are for woven goods only, not for knitted goods.

TABLE 8.2

Capital-Labor, Output-Labor, and Output-Capital Ratios
for Selected Firm-Groups in the Textile Subsector

Egypt, 1979

	Ratio		
	Capital/ Laborer (Kg./Worker)	Output/ Laborer (LE/Worker)	Output/ Capital (Kg./LE)
Tailors:			
- Rural Dressmaker	124	130	1.05
- Rural Tailor	181	160	.88
Ready-made Clothes:			
- Small	1,981	700	.35
- Medium	3,026	770	.25
- Large	4,087	770	.18
Retailers:			
- Small	5,254	2,200	.42
- Medium	13,241	5,700	.43
Weaving:			
- Medium	3,843	1,110	.29
- Public Sector	x	1,080	x

Sources: Output-Labor, Chapter 3, Tables 3.3 and 3.4; Capital-Labor, Appendix 3 and Chapter 4; Output-Capital, Derived

The retailers in the traditional system also use more labor per unit of output than do larger retailers, as the small retailer had a volume of 2,200 kilograms per worker while the medium firms retailed 5,700 kilograms per worker. The public sector firms used even less labor per unit of output at 21,600 kilograms per worker. On the other hand, the capital required per laborer was LE 5,254 for the small retailer, and LE 13,241 for the medium private firm. The capital figures are not known for the public sector. In addition, the transaction between the tailor and the consumer is much more labor intensive than in the modern system, so some labor is being provided by the consumer.

Currently most weavers have grown to where economies of size have been captured, so this comparison is not so much of an issue there.

To finish this comparison, though, it is required that losses in productivity due to the use of labor intensive techniques be considered against the extra cost of capital added to improve productivity, shown in Table 8.2. In that table several different ratios are presented for selected firm-groups, which summarize the discussions in the previous paragraphs. The most interesting comparisons are between the RMC and tailoring firm-groups, and the different sized retailing firms.

The initial conclusion based on capital-labor ratios would be that jobs can easily be generated by the addition of relatively small amounts of capital using labor intensive techniques. This would be true for both retailing and garment making. However, the jobs have relatively low productivity as well, which is illustrated by the output-labor ratios in the second column. The capital-output ratios show the balance of these two considerations. In all cases, the labor intensive method will still add jobs and output at less capital cost, although the retailing figures are virtually identical.

The outcomes shown in Table 8.2 hinge on a number of assumptions, which can be challenged and should be analyzed in more depth. The extra cost of capital per worker in the RMC firms may in fact increase productivity. A growth of about 14 percent was assumed in the budgets between the small and medium firms, but no change was assumed between the medium and large firms, even though the cost of capital increased about one-third. If there is a productivity improvement, the different sized firms may have closer capital-output ratios.

The capital per laborer may be overstated for the larger firms, since there are some questions about whether to include pressing and packaging equipment in these measurements. Also, much of the space used by the tailors has little opportunity cost attached or is subsidized rent, so the costs of buildings and land are not calculated in the same way as for the RMC firms. These values are a large part of the total investment for RMC firms, from 61 percent of total investment in the smallest firms to 30 percent in the largest RMC operation, so putting these firms on equal footing would narrow the differences in the capital-output ratios.

For retailing, the costs of purchasing space, a major component of capital, is assumed to be higher for the larger retailers at LE 1,000 per square meter versus LE 500 for the smaller retailers. Also, the working capital is assumed to be three months of input costs for both sizes of firms, while in fact there may be some economies of size. This might mean that larger retailers actually perform better in terms of the capital required to distribute a given level of output.

Overall, it is possible to revise assumptions to argue that the small firms are using nearly as much capital and more labor to generate production, which would mean that they are much less advantageous than

first thought. However, they are using resources that are much harder to access and have a lower opportunity cost (This is discussed further below.)

The labor intensive methods offer few opportunities for increasing productivity, since there is little capital applied. Adding demand to allow specialization can help in the traditional system, and centralized cutting of cloth would decrease losses and also cutting time. In Egypt, the modern system has the potential of applying many modern improvements to increase productivity, thereby allowing decreased costs and increased wages. It is hard for wages to rise through gains in productivity in the traditional system.

Point 3: Methods of Coordination

The central problem requiring coordination in the textile subsector is that retailers need to offer variety to consumers, but there are economies of production runs in garment making and weaving. The two systems handle this coordination issue in fundamentally different ways.

In the traditional system, the small firm is the rule, except perhaps in wholesaling. The wholesaler is the central coordinating entity, who takes many dispersed demands and aggregates them into orders that can be given to small weavers, allowing the weavers to make relatively long production runs to reduce the costs associated with variety. The wholesaler directs the system and is able to view the market to anticipate the proportions of different products that will be needed.

A second aspect of the coordination of the traditional system is that the variety, almost by definition, is less than in the modern

system. The final product sold to the consumer is cloth, which has fewer qualities embodied in it than clothing, so the consumer makes a decision about fewer qualities. The additional qualities in the garment are controlled by the final consumer herself, by having the tailors' production coordinated by the final consumer. Still, even with this added point of coordination, there is less variety in the system because there are fewer specialty machines, the wholesalers must rely on tradition to determine cloth mix, and the consumer and tailor are reticent to try new fashions with relatively expensive pieces of cloth. Moreover, variety is not part of traditional existence and therefore not much is expected.

A final aspect of the coordination of the traditional system is that the transaction between the tailor and the final consumer generates much information about the costs of additional qualities, which are important to consumers with low income. This comes at some expense though, since there is much time involved in the transaction. The early entry of the consumer into the production process affects the amount of cloth required per garment because there are losses taken by the cloth retailers and the tailors must use extra cloth compared to the bulk cutting done in the modern system. Also, because the consumer purchases the cloth, there is a lack of information flowing between the producers and distributors of cloth and the producers of clothing.

The modern system has a different coordination process. There are large firms in most of the stages of production and distribution and the wholesaler often is not a separate entity. The firms have become large enough so that most orders to weavers or RMC producers are such that they capture the economies of size in the production of cloth and clothing. They can incorporate the wholesaling function into their normal relations

with other producing firms. Thus weavers can deal directly with RMC firms and produce at low cost because the RMC producer will need large enough amounts of each cloth to allow large production runs. There will still be some need for the wholesaler to sell to smaller firms and to distribute overproduction or the non-ordered production of weavers.

The final product from the modern system, the garment, is sold through a posted price market in retail stores to final consumers. It embodies a great many qualities, such as styles, sizes and colors, on which the consumer must make a decision. Given the many qualities and the nature of the market, it is difficult to know on what basis the consumer is making a choice. Thus the relationship between the consumer and the producing firms is more difficult to discern. This becomes even more pronounced as the amount of fashion and variety demanded by the consumer increases. Promotion, advertising, experimenting with inventories, and market research become necessary in the modern system, as well as an ability to make mistakes. Establishing sizes allows consumers and retailers to know what is required with a minimum of discussion. Therefore, the coordination is achieved, with some limitations, by setting standards to identify the qualities. Information is thus automatically fed back into the system when a garment is ordered.

While there is less information regarding the consumers' preferences and more to try to understand, there is better coordination between the cloth manufacturers and the RMC producers, so the compatability of cloth and clothing should be better. Also, as shown in Chapter 4, the firm's ability to coordinate large orders leads to lower input costs through bulk ordering and also reduces losses of cloth in garment production. The cost of wholesaling is reduced because it is done with less resources. Thus, the difficulties in identifying consumer

preferences leads to some larger costs, but the coordination through longer term relationships and larger order sizes from larger firms leads to some savings.

There are some differences in how coordination is effected in the different channels within the modern system. The wholesaler is still useful in the small RMC channel but has disappeared from the large RMC channel, except to sell cloth produced by large and medium weavers into the traditional system. The public sector is coordinated extensively through vertical integration and also through outside administrative control; because of its importance, the decisions and actions it takes will affect the rest of the subsector in important ways.

A significant by-product of the mechanisms of coordination used in the two systems is found in the way that costs are aggregated up to the final consumer. The ability to coordinate between large firms saves the cost of the wholesaler. Alternatively, the ability to get the consumer into the process earlier allows lower cost tailoring to be used and clothing retailing to be skipped. The different combinations of savings and costs incurred is based partly on the ability to coordinate the systems differently. The costs were examined in detail in Chapter 4, Section 4.3.

Point 4: Handling Risk in the System

The variety required and fickleness of the consumer are notorious features of most textile subsectors, features which make for considerable risk in the system. In the traditional system, consumers and producers are more risk adverse since they are smaller firms who have little margin for error, or they are consumers who are generally poor. They use

several strategies to accomodate this risk in the face of adversity. The first is tradition, discussed in the previous section, which lends predictability. Also, the consumer voices her preferences prior to making up the garment, so that production is on demand, and the firms face relatively less risk because they do not commit to product lines before making a sale.

The traditional system thus uses organizational alternatives and choices about the amount of variety to reduce the costs of risk. They probably do not handle risk through the use of price premiums, but use organizational arrangements that reduce the level throughout the system.

The modern system approaches risk much differently. With variety being greater, there is more potential for risk but the larger firms are better able to handle it. The modern system firm is a "Going Concern," and can retain profits to prepare for the poor year. Keeping close track of profits will allow the firms to assess appropriate risk premiums to handle the increased risk in the modern system. Also, this higher level of risk is reduced through the size of the firm and its view of the market. The modern firms's customer base is a larger "sample" of the population than is a smaller firm's, so the variance and hence risk they face will be reduced since they can see the actual population better.

Point 5: Resources Required in the Two Systems

The two systems use different resoures in differing amounts. The costs of production are dependent in great part on the relative scarcity of the resources used. The traditional system uses pockets of resources that are hard to access and would otherwise be unutilized, while the modern system requires resources that are in greater demand. The small

savings put into a sewing machine or into inventory, and the use of home workspace represent resources that would be missed if the modern system were the more prevalent system. The requirements of the modern system for management expertise and blocks of capital or space are large relative to the current resources in Egypt. As the cost of space increases, this becomes a larger disadvantage for the modern system.

The coordination and size of the firms in the modern system allows certain resources to be used in smaller amounts. The transactions and distribution costs in the modern system are less than in the traditional system, especially when labor costs are high. While the modern system does often require scarce resources it does conserve on others, especially in the use of cloth and the consumer's time. The question of which system is least costly then turns on the questions of the costs of the different combinations of resources used in the two systems. (The current situation has been analyzed in Table 4.23, which shows the total delivered cost by channel. It is reproduced in Table 9.1 as well. Furthermore, crossover points for total delivered costs based on different scenarios of relative prices could be constructed from the budgets.)

8.3 Strengths and Weaknesses of the Traditional and Modern Systems

With the previous picture in mind the strengths of each system can be sketched. The traditional system quite clearly can generate jobs if it expands. It also provides important options in a low income economy, since consumers can minimize costs of clothing through home production. The third strength is that it makes use of low-cost resources to produce a large part of the clothing production in Egypt. Conversely, it uses

excess cloth in the process, offers fewer ways to increase productivity and raise wages, and is not able to offer the kinds of products that can become exports. As Appendix 4 shows, the tailors are economically more efficient given certain assumptions, so there is some quantification of their use of low-cost resources.

The modern system works in the opposite way. A relatively few laborers have high productivity jobs, or at least that potentially have high productivity. A large variety of products are offered, which may not be a great strength except that it increases the potential for exporting. It uses resources with high opportunity costs, such as large blocks of capital, retailing space, imported machinery, and managerial talent. The modern system also provides a benefit with positive externalities in that it offers one of the main training grounds for managers because it represents one of the largest private industries in the country.

8.4 Evaluating the Current and Future Performance of the Subsector

The performance of the subsector should be considered against the criteria of efficiency, meaning achieving low-cost production given current price regimes, institutions and income distribution; and also against the criteria of equity, employment, and progressiveness. Progressiveness focuses on the dynamic movement of the subsector, in how it adapts to technology change, how the actors in control of the system are adapting to changes in prices and demands, and how well consumer preferences are being met.

8.4.1 Assessing Current Performance of the Subsector

There are currently many good aspects of performance in the system. The traditional system is providing jobs which currently have decent remuneration. It also provides low-cost production through its use of cheap resources and by offering an option to choose home production of garments. The traditional system also makes a positive equity performance because of the extensive number of jobs offered to many people with few other opportunities. The transaction between tailors and consumers seems to take into account consumer's income, with the prices adjusted based on local variations in income. Finally, the traditional system fits the consumers' and producers' needs for risk averse practices in the way it is organized.

The modern system appears at first to have fewer good performance attributes. They do offer the options of variety in RMC products and somewhat higher quality products than tailors, which is appropriate to a small but growing group in the society. Besides offering variety, the potential exists for the modern system to become lower cost producers than the tailors because they can improve their currently very low productivity. Modest improvements could make their prices more competitive with many tailors, although with fewer dressmakers. They are also a managerial training ground and offer the potential for exports. Moreover, the modern system uses less cloth, which represents the conservation of several resources that have high opportunity costs, the chemicals used in synthetics and the land used to grow cotton.

There are several inherent problems in each system. The excess use of cloth in the traditional system results in poor performance, and the limited ability of these firms to increase productivity also means

that there will not be increasing incomes for producers without increases in demand. The quality of the product appears to be low, and the ability to organize the industry to export is limited. The use of scarce resources, such as large blocks of capital, and increased use of retailing space, make the modern system a poor performer when the main output goes to low valued local production.

Viewed from the perspective of the macroeconomy, perhaps the main current problems are the lack of exports in the modern system and the extensive subsidies that go into both systems through the popular supply program and the subsidies to public firms. (The popular supply program was about LE 117 million in 1982.) The extra inputs used in the traditional system and the high cost developmental resources used in the modern system are secondary but significant problems.

Perhaps the biggest problems have to do with progressivenss, in the way that the system might evolve. The employment consequences of the loss of the tailor to the RMC industry were shown in Chapter 7. Under pessimistic asssumptions the net difference in jobs created are immense, at about 1,000,000 jobs. Thus it is important that the RMC industry expand only when it is appropriate, when tailors and dressmakers have other opportunities for decent remuneration, and when the cost of RMC production is lower than the total delivered cost of the tailor.

The second major issue relating to the dynamics associated with progressiveness is the image that the public sector has of its future role and the consequences for performance in the system. These firm-groups are major points of control in the subsector and how they take advantage of that control has many implications.

Two issues for performance, derived from this assessment of the strengths and weaknesses of each system, are discussed in more detail in

the next two sections. The first discussion focuses on the possibility of negative performance from the evolution of the subsector to a modern system before its time. The next section examines the kinds of influences the public sector has on the subsector, given its control over many functions.

8.4.2 The Possible Introduction of the Modern System Before its Time

This research has identified several reasons that the modern system, and especially the modern RMC firm, may become dominant before its time and force the transition to occur before it should. The correct time would be when the modern system can provide the same variety at lower cost than the traditional system, or more variety that consumers want, taking the loss of many jobs into account. This section will outline the main factors that might encourage RMC firms to expand faster than consumers want or technological advantage might warrant.

The first set of factors, and in many ways the most direct, are several regulations in existence. The regulations on the mark up of cloth but not RMC products at retail will allow retailers to set the price for RMC products to maximize their profits, but not for cloth. While the demand is still overwhelmingly for cloth, so retailers cannot change quickly, at the margin they will try to introduce and promote ready-made clothes since they can choose prices with less constraint.

Secondly, the ability of new firms to register under the Law 43 status allows them to avoid many labor regulations, get tax holidays, and purchase imported inputs with fewer restrictions (See Chapter 6, Section 6.3.) This preferential status has allowed Egyptian firms to take advantage of a better environment when they consider expansion. (While

designed to encourage foreign firms, seventy percent of the total investment in Law 43 projects is from Egyptian sources (National Bank of Egypt, 1985, p. 256.)) Since the weaving and spinning industries appear to have more saturated markets than the RMC industry does, especially when the traditional system is ignored, a large part of this expansion will probably be aimed at the RMC industries; if a number of the following factors are true, this will increase the tendency toward overexpansion of the industry.

A final set of regulations that may promote a premature transition to the modern system is the tariff structure, which allows local firms to earn higher profits since the effective rates of protection are high. This is difficult to assess in the Egyptian regulatory environment, which is comprised of many offsetting policies. From the accounting ratios of shadow prices to market prices estimated by the World Bank, the net effects of these policies can be roughly sensed (See Appendix 4.) Many of the textile products seem to be subsidized by over 50 percent, but others seem to be protected to almost the same degree (World Bank, 1983, pp. 390 - 392.) At least for some RMC products, there is protection and presumably excess profits earned.

Protection reduces demand and would slow the transition, but the greater profits allow more advertising and investment, and to the degree that this is effective, it would hasten the transition. The precise net effect would be hard to determine.

A final regulatory impact is the existence of the public sector coordination among firms. The firms in the public sector are dominant in all industies except for RMC production, and their actions are coordinated though extensive control. They are able to make decisions about how the public sector should expand. In particular, the retailers

have command over half of the market and can influence the amount of RMC products that are provided to the system. Their image then partly determines how fast the transition occurs. Also, the control of the spinning industry by the public sector gives them total control over what is probably the most critical input in the subsector.

A second set of issues that may be causing a premature transition is the relative size and profitability of the RMC firms. The bulk of the RMC production is controlled by large and medium firms, which are profitable, controlled by families or managers that are sophisticated, and are capable of designing modern promotional tactics. The firms are large partly because there was a small niche for RMC firms for many years, servicing foreign department stores and the military, and also because the more recent firms have been started under the Law 43 regulations with outside investors and who started at a relatively large size. (One of the wholesalers interviewed was entering into a joint venture with investors to create an RMC facility with 2,000 employees.)

The firms are large due to history and regulations, and they are profitable because they are the first movers in a new industry that may have substantial protection. They are able to use these profits and their capabilities in several directions. First, they can offer incentives and credit to the smaller retailers because of the extra profits available. Also, more than any other firms in the subsector, they are able to "buy" the transition by purchasing retail establishments and changing the proportions of what those retailers offer. Finally, they can use the modern vehicles of promotion, such as television and newspapers, to influence preferences. The combination of profits, size and sophistication allows the larger firms to have better access to credit as well, further allowing rapid expansion. The tailors and

dressmakers clearly do not have any of these options.

The objection to regarding the size and profitability of firms as causing a change that is "too fast" is that this is simply the way the market works. The focus here has been on the ways that the large firms are able to influence preferences to increase the RMC proportion of sales higher than it would be. These are valid efforts by these firms. However, the validity of promotion used to influence changes is arguable. Also, with the uncertainty in the situation, retailers can be persuaded to "see" the better judgment of stocking RMC products. To the degree that the costs of RMC products drop to influence demand this is clearly good. To the degree that the restriction of cloth availability occurs because RMC producers have first and strongest call on the weavers, it is questionable. The strongest argument, however, is that the externalities of lost jobs and lost access to little used resources are not taken into account when they make these decisions.

Two other factors from the analysis of coordination may play a role in the transition as well. First, there may be a tendency for the larger RMC firms to overbuild because of long lead times. The requirements of imported capital, investment permits, and long negotiations may cause too much capacity to be added. Finally, the incentives that RMC firms have to connect with weavers may in effect cut off cloth going to the traditional system, so that less is available, its price rises, and the transition is hastened.

8.4.3 The Objectives of the Public Sector

The public sector has three main points of control, at which their decisions can have either negative or positive impacts. First, they

control all spinning, so the proportions and qualities of yarn they produce and how they distribute it will make different types of cloth and clothing more or less costly in the market. Secondly, the retailing industry is dominated by the public sector, and its decision about what to stock and promote will have a large impact on the availability and ease of purchase of different products. How they decide to participate in the growing subsector will also make an impact on the ability of the private sector to perform well.

The public sector has complete control over the different qualities and quantities of yarn produced, and yarn is the basic building block whose quality ultimately affects the quality of the final product. If the quality is high, then the garment may be exportable, while it will not be if the yarn quality is low. There is also a difference in the costs of producing low and high quality yarn, in terms of the processes used, the amount of inspection, and the costs of quality control. Poor quality yarn increases costs in weaving due to breakage, and in RMC products because low quality yarn dyes poorly and has be be thrown away.

If the amount of high quality cloth produced exceeds the local demand and the needs of the export market, then those who cannot afford the higher quality cloth will be forced to buy it, and/or the upstream firms will be forced to take losses to move it at a price that the market will bear. Without a good estimate of the demand for different qualities, this could cause a number of problems upstream. The amount of low quality cloth required probably is underestimated, or ignored, given the goals of quality improvement and the interest in moving to a greater proportion of synthetics. Too much high quality or synthetic cloth could have a negative impact. Alternatively, too little will constrain the goal of exporting and cause increased costs in the RMC industry because

they will have to reject a higher proportion of cloth.

The image that the public sector has of itself and that The General Organization for Investment (GOFI) has of the role of the public and private sectors will influence the aggregate outcomes. If the image is of a larger private sector, they should understand the capacity of the private sector and how it can be expected to expand. That knowledge might lead to decisions to shrink the public sector. However, it appears that the decision process is to determine what the public sector can produce, and then allocate the rest to the private sector. This probably leads to policies towards the private sector that are more constraining than if the maximum contribution of the private sector is determined and the residual is given to the public sector. The latter policies would be more compatible with a transition to a market-based private sector economy.

Different functions in the public sector are competitive with the private sector, while others are more complementary and supportive. It is clear that the spinning function is complementary because it is a critical input into the subsector and one that is provided only by the public sector. As indicated above, the decisions made with regard to the quantity, quality and price are important to the performance in the rest of the system. Secondly, the public sector appears to be the major provider of low-cost cloth for the poor consumer, both in the rationed cloth program, and outside of it. It appears that the private sector focuses on the higher end of the market and sells much to the RMC industry. Thus, the public sector, if it continues to supply the lower end of the quality spectrum, will be providing a complementary effort to that of the private sector.

Finally, the public sector may be instrumental in the transition

to ready-made clothes, with its large retailing structure and possible emphasis on RMC products. It is complementary to the RMC efforts in the private sector, but clearly competitive with the tailors and dressmakers. The competitive points are found when the public sector produces higher quality cloth, when it tries to expand its RMC production, and perhaps in its retailing structure.

8.5 Suggested Policy and Project Activities to Improve Performance in the Subsector

In this section, several general actions, mainly policy actions, are mentioned and then two basic projects or programs are discussed. The first project, the introduction of a semi-traditional channel, is oriented towards improving the performance of the traditional system. The second project is aimed at improving the export performance of the modern private sector. These represent two of the major problems in the system.

8.5.1 Suggested Policy Actions

The need to make the playing field level between the RMC firms and the tailors is a first concern, so that the transition to a modern system does not occur before its time. The easiest suggestion is to review the fixed margins on distribution to see if the impacts from releasing them could be assessed, and whether the concern in this research -- that these regulations are hastening the transition to ready-made clothing -- is well-founded. Care should also be taken so that the investment procedures do not allow for overinvestment in RMC firms, since that will

be a natural tendency due to the perception of its infancy and also the perceived profit levels. It is probably not useful to restrict the modern RMC firms other than perhaps having them stay out of traditional clothes unless they can demonstrate better prices than given by the tailors.

Also, the public sector should be careful about its objectives in its retailing spinning firms, and should keep good track of demand. They have a unique possibility of coordinating the system because they have knowledgable producers in both functions.

It would seem prudent that the public sector focuses on the things that are complementary and not on the competitive parts of the subsector. The spinning industry should be of first priority, but it includes more than just improving quality. It is important that the actual consumption patterns be understood, so that the system delivers the appropriate proportions. Not only does quality count but being aware of the large numbers of people who still need low-cost, low-quality cloth, at the best price for which it can be delivered.

Focusing on the low quality of woven goods is also a major complementary effort to the private sector. It will require restraint from the natural inclination to improve the quality of the product and to try for more exports. If the exhortations in consultants' reports and the current emphasis on exports and greater RMC production provides any indication, this inclination will be reinforced. Restraining this inclination may provide the best guidance to the system and allow the public sector to focus carefully on a few things at a time, such as improving the knowledge of the actual needs in the system, providing the correct mix of cloth and learning how to provide good spinning and dyeing services.

If RMC products are going to be emphasized, then restricting efforts to the modern clothes will allow the lower cost tailors and dressmakers in rural areas to face less competition, and will focus on the more narrow market for people who can afford the higher cost and prefer Western style dress. This will also have the effect of slowing the learning consumers may need to consume RMC products.

8.5.2 Creating the Semi-Traditional System

One possible project, perhaps leading to a more widespread program, would be to experiment with using tailors and dressmakers as distributors for the rationed cloth program. They could additionally distribute some non-rationed products and ultimately, if the distribution process seems sound, pre-cut garments could be distributed through the system if styles could be made which fit the tailors' capabilities. The making up could be done by tailors and dressmakers, or by home production if it were preferred.

The project would represent a blend of modern wholesaling and distribution methods with traditional production and retailing. A centralized wholesaling and distribution function could be maintained in the desert, and deliveries could be made regularly to local drop-off points. Computerized order processing and inventory control could be used at the modern wholesaling firms, coexisting with the traditional transaction. It is termed semi-traditional because it retains many of the features of the traditional system -- tailoring, a negotiated transaction, and cloth purchase by the final consumer -- but it also makes use of the management talents of the wholesalers, and it improves coordination between the garment producer and the weaver through an

active wholesaler.

The details of the procedure might be as follows. First, the consumer would approach the tailor or dressmaker and decide on the type of cloth she wanted. The tailor would then pass the order back to a centralized wholesaler, who would deliver the product to a local distribution point, and the tailor would pick it up from there. The consumer could either have the tailor do the fashioning or do it themselves. The objective would be to create a less costly distribution system than exists now. With a margin of 25 percent for wholesalers and weavers, this seems possible. To get it below the 9 percent total margin of the popular supply program would be even better.

The most difficult part to this point is how to give the consumers the satisfaction of shopping through a variety of patterns and colors. Samples are a possibility but might be expensive. Samples exhibited in the major public retailers might be another alternative. Local sample shops, which only show what is available and leave the sale and distribution to the tailors, is a third possibility. This is a central question in this project. One model that seems to work in the U.S. is the wallpaper store, where consumers base their decision on samples.

A variety of different financial arrangements might be tried as well. The best would probably be to have the customer put a large percentage of the cost down ahead of time, using the conservative approach that the traditional system uses to determine creditworthiness -- getting the cloth payment up front. Then the tailor would be free to extend credit or demand payment as local conditions permit. The tailor might be required to post some kind of bond, or have to pay at the local distribution point in cash. With experience, certain tailors may be able to develop lines of credit and be able to purchase on their own account

if they see opportunities.

The previous discussion makes the implicit assumption that the public sector would run the program, since it administers the rationed cloth program. This is not necessary but probably would make sense at the beginning. However, any number of the functions could be contracted to private firms. The large private wholesalers have sophistication, as do some of the larger retailers, and they might be interested in spending profits to invest in that system. The pricing policies, allowed returns, and the decisions about bidding are rules of the project that would be critical to its success, and would determine if there is sufficient private sector participation.

8.5.2.1 Sources of Improved Performance in the Semi-Traditional Channel. This project is recommended because it moves the system in several positive ways. First, the losses of cloth through the channels should be reduced. The normal cloth retailer loses the "rests," the pieces of cloth that are at the end of each bolt that was purchased from a wholesaler. These could be reduced because longer bolts of cloth could be maintained at the wholesaler and the rests would be smaller proportions. If the program could move to some pre-cut garments, there would be greater savings in cloth because modern methods of cutting could be used, leading to substantial savings. Lower opportunity cost space could be used for the storage of some of the commodities, in the tailor's home or in the desert warehouse. Because of the modern wholesaling methods of inventory maintenance, the holdings could be reduced and the appropriate proportions of faster moving cloth could be produced and maintained, thus reducing the costs of inventory.

In addition to reducing the deficiencies in handling cloth, there are also positive equity implications as well. This program helps keep

the piece goods system in place and extends its life. Other things being equal, this will keep the tailors and dressmakers in business longer, providing decent income to less-advantaged groups. The gains from retailing will be spread across more people in an equitable manner as well, assuming that some commission would go to the tailor or dressmaker, and that it would be less than the mark up that a retailer would use. Finally, because the piece goods system is preserved, the ability of poor consumers to decide how to spend their limited budget on clothing is maintained.

The potential for better feedback from the tailors, via questionnaires or communication, is possible. This would allow the rationing program to perhaps function better for less. The project would also use the current configuration of institutions without asking for dramatic revisions. In the best light, the project could reduce subsidies and improve the program.

Employment and progressiveness are two other dimensions of performance as well. The distribution and garment making process will remain more labor intensive (and perhaps less space and inventory intensive) than a transition to ready-made production and a system of medium and large retailers. The system is progressive because it improves certain dimensions of dynamic efficiency, but it also takes into account the capabilities of current organizations and the existing institutional context, so that positive gains can be made in many dimensions.

The implications for the rationed cloth program are worth noting. The retailers who are required to participate in the program are unsatisfied, claiming that it does not pay to distribute the cloth. The cost of the program is substantial and it is politically visible. This

program will move the rationing program outside of the retailers, who do not want to participate at all. It will furthermore allow the program to be better targeted, so that it can reach the beneficiaries with a better mix of cloth, so that preference articulation is improved. It should also be possible to reduce the costs of distribution and production of the cloth as well, since inventories can be reduced, more efficient runs of cloth made, and lower cost space used for inventories.

Finally, the program suggested here may provide a model for retailing that makes considerable sense for Egypt. It uses a labor intensive and time intensive retailing method but conserves on the use of space, all of which are in keeping with the scarcities of the society. It is in effect a variation on the mail order retailing business, and may be applicable to other commodites as well, especially if the system were tested through the use of the rationing program to show its validity. In the U.S., the chain and mail order purchases were 22 percent of clothing sales in 1983 (American Apparel Manufacturers Association, 1984, p. 32.) The willingness of the consumer to wait for a product allows many advantages and it should not be lost while it is still useful. In a country like Egypt, with the space constraints that exist, there is reason to make this kind of retailing a significantly higher proportion.

8.5.3 Export Promotion Programs

This program is more indicative than the previous one, and is more of a suggestion of where to look. The prime candidates for exports are the larger RMC producers, who are prevalent, have resources, and are generally good managers (in a difficult situation.) In combination with the medium and larger weavers, they have the potential to develop high

quality and competitive products. This group is more likely to be exporters than either the small firms or the public sector firms and they have a natural push towards quality through the discipline of competition. They seem to have two major problems in exporting: the quality of the yarn, and the bureaucratic constraints to exporting. They probably also have difficulty in making and maintaining contacts and may have some technical problems as well.

One way to orient this channel towards exports would be to sell the top quality yarn with a "medallion" attached to it, which would allow the bureacratic obstacles to be hurdled if presented. If the yarn was not used to export, a penalty would be paid or perhaps an extensive interview could be demanded to assess the reason that the intended exports were not achieved. The public sector spinners can identify their best yarn and the private sector firms can decide if it is of adequate quality for export. This does not require a major new bureacracy; it would also help build an information base; and it would focus the export efforts on the groups that seem to have the most potential. The quality control expenses could be absorbed by the public sector at first until the quality that actually results in exports is understood. One possible institutional home for this project might be the Cotton Textile Consolidation Fund.

8.6 Summary

In this chapter, the various pieces of analysis done earlier were brought together to evaluate the performance of the subsector. This was done by making a comparative description of the two systems in the subsector and then comparing their strengths and weaknesses. The

comparison looked at the nature of the output of each system, their production processes, the coordination mechanisms, the methods of handling risk and the different types of resources used. From this discussion, the problems in the subsector were inferred. Several policy, project and program suggestions were made at the end of the chapter. The most important is the recommendation for the implementation of the semi-traditional channel, which would capture some of the strengths of each system and mitigate their weaknesses.

CHAPTER 9

RECOMMENDATIONS AND CONCLUSIONS

9.1 Introduction

Three areas of inquiry were examined in this research. This chapter presents the conclusions drawn from this effort and the recommendations based on those conclusions. The first section examines the major conclusions in each of the four areas, while policy and project recommendations and several areas for future research are discussed in the second section.

9.2 Conclusions

The three areas of inquiry in this research include a comparative statics analysis of the different channels in the subsector; the role of smalll scale industry; and its evolution and that impact on economic development. The conclusions for each of these categories is the subject of this section.

9.2.1 A Comparative Statics Analysis of Channels in the Subsector.

Several variables were examined under this heading: the demand for products of the subsector; a description of the subsector with regard to employment, volume and value added in different firm-groups; the total

costs of providing products in the various channels; and the techniques of coordination in each channel and their adequacy. These are discussed in separate subsections below.

9.2.1.1 The Demand for Products of the Subsector. Perhaps the most important conclusion of the research is that 34 percent of the cloth used for garments is made up in the home. Also, using piece goods retailing gives flexibility to consumers to extend a limited clothing budget. They are able to buy more cloth and use home production, or they can buy higher quality cloth and use a tailor but they will have fewer pieces. This decision by consumers affects the size of many industries in the subsector and the change in employment.

About 67 percent of the tonnage of domestic retailers was sold as piece goods and 33 percent as ready-made clothing (RMC) products in 1979. Because of the relative cost of making up garments in the different systems, the RMC industry more often provides clothing for higher income consumers while the piece goods usually are sold to poorer consumers. Part of this latter consumption is through the rationed cloth program, the Popular Supply Program, which supplied about 50 percent of all cloth used for garments (excluding ready-made clothing) in 1979. For many of the poorer consumers, this cloth was the main source of most of their clothing.

The overall growth in demand for clothing products should be fairly strong because of an anticipated population growth of about 2.0 percent during the next 20 years, a high income elasticity of about 1.25, and a growth in per capita income of about 2.0 percent. The domestic growth of demand should be adequate to support an expanding subsector, and in addition, the ability of the subsector to perform in the export market will further add to demand.

There are other important factors in the analysis of demand which were not assessed during this research. While some evidence exists that income affects whether a person chooses to buy RMC products or use the traditional system, there is also a need to know more about who buys RMC products and why. The issues include whether brand labels affect consumers, whether consumers feel that buying RMC products is being progressive, and whether some RMC products appear to be complements to tailored products or are in fact cheaper and have grown at the expense of the tailor.

9.2.1.2 The Picture of the Subsector. One of the most important efforts of the research was to specify the subsector and its component channels. The picture that has emerged from this research is reproduced from Chapter 3 in Figure 9.1, which shows a subsector composed of two systems, the modern and the traditional system. There is just one channel in the traditional system and three channels in the modern system.

The traditional channel includes the tailors and dressmakers and all small firms in other industries. In the lower industries of the subsector, the large wholesalers could be considered part of the traditional system. They can be of any size and still service the retailing firms that provide cloth for the consumer to take to tailors or dressmakers.

The modern system contains three different channels, two of which are in the private sector and a third which is in the public sector. The two private sector channels are distinquished by the size of the private sector RMC firms within them. The smaller RMC firms in the medium RMC channel require a wholesaler because they do not purchase enough cloth to negotiate directly with weavers. The public sector channel is primarily

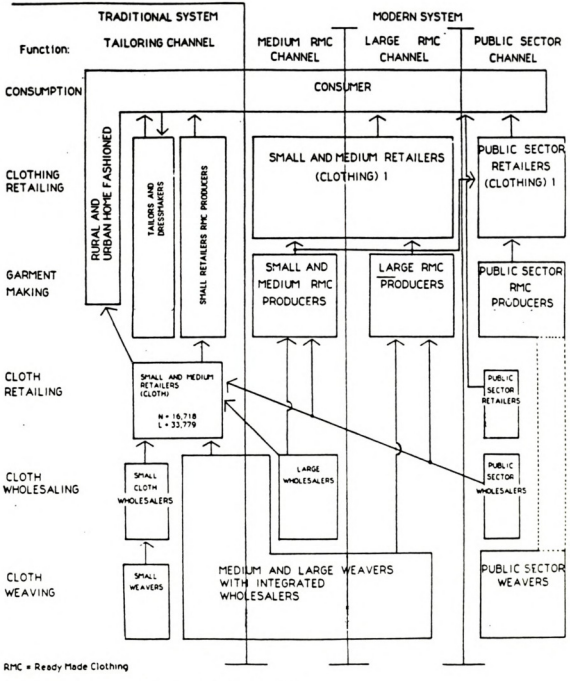

FIGURE 9.1
The Textile Subsector in Egypt, 1979

distinguished by the regulatory status of the firms in it, which are wholly-owned by the government. Also, the firms are larger and more often integrated than firms in the private sector.

In Chapter 3, the quantitative attributes of each of the firm-groups were given. One of the most important conclusions was related to employment. The tailors and dressmakers had about 317,000 workers, who worked in many small firms. The highly integrated public spinning and weaving firms follow the tailors and dressmakers with about 260,000 workers. The volume handled by each firm-group generally followed the level of employment within it.

The value added by different firm-groups also was similar, although there were several interesting exceptions. The rural dressmakers handled 36 percent of the cloth being made into garments by tailors and dressmakers, but generated only 12 percent of the value added. The opposite relationship existed for the urban tailor, who sold 19 percent of the volume but generated 55 percent of the value added of all tailors and dressmakers. Retailers sold 33 percent of their volume as clothing but gained 52 percent of their total value added from those sales, reflecting a higher mark up.

Financial budgets were created for each firm-group, and they showed widely differing profitability between firm-groups. If correct, they indicate the types of firms that are likely to expand and those that may face disinvestment. The rank of return on total assets (not equity) was, going from lowest to highest: small wholesalers, losses; large wholesalers 4.4 percent ROA (return on assets, after taxes); small retailers and medium weavers, about 8.3 percent ROA; large weavers 11.4 percent; medium retailers, 12.5 percent; large RMC producers, 13.8 percent ROA; and all other RMC producers and small weavers, with greater

than 17 percent ROA. The smallest firms often had high returns but probably use it for family living expenses, so investing in them might not be as attractive as the ROA indicates. The clearly attractive firms for investment are the RMC producers and the larger retailers.

9.2.1.2.1 The Value Added in the Channels and Stages of the Subsector. The statistics on the value added for each stage and channel in the subsector from Chapter 4 are reproduced in Table 9.1. This table in effect presents a summary of the variation in total delivered cost by channel. The value added figures show this quite well, since the additional cost of each stage of production or distribution is the value added. The type of firm-group also makes a difference in the total delivered cost as well. This is considered mainly for RMC producers. Other groups are considered in the following section.

The main conclusions are found in the line showing the total cost to the consumer. The cheapest way to get a garment is to buy a standard piece of cloth and produce the garment at home. The next least costly way is to take the garment to a rural dressmaker or tailor. The urban dressmakers and tailors are more expensive than ready-made producers, but they may produce different products than assumed in the RMC budgets. A safer conclusion is that the urban tailors are about as expensive as the RMC producers.

The build-up of costs depends greatly on which functions are undertaken. Leaving out making up and clothing retailing allows home-fashioning to be the cheapest garment option. The tailoring channel requires cloth retailing but is able to skip the more expensive clothing retailing, which is done inexpensively by the tailor. Firms in the medium RMC channel must use the wholesaler while in the channel using larger RMC firms the wholesaler may not be required.

TABLE 9.1

Value Added in the Channels of the Subsector

(LE/Kilogram of Clothing)[1]

Function:	....TRADITIONAL... Channel A[2]	Channel B[2]	.....MODERN..... Channel C[3]	Channel D[3]
Spinning	.57	.57	.56	.57
Weaving	1.47	1.47	1.46	1.47
Wholesaling	.20	.20	-	.20
Cloth Retailing	.55	.57	-	-
Tailor[4]/RMC	-	2.69	2.88	2.63
Clothing Ret.	-	-	1.59	1.59
Total Cost to Consumer per Kg.	2.79	5.50	6.49	6.46

[1]Figures are Adjusted for losses - 5% in Cloth Retailing; 5% in home production, tailoring and RMC production (except 4% for the large RMC producer); 10% in weaving.

[2]Channel A is the cost of Home Garment Making; Channel B gives costs for a consumer using a Rural tailor

[3]Channel C is the cost to a consumer purchasing a garment produced by a Large RMC producer and no use of a Wholesaler

Channel D is the cost to a consumer purchasing a garment produced by a Medium RMC producer who uses a Wholesaler

[4]The tailoring Figure in Channel B is for the rural tailor. Using the other tailoring figures, the total delivered costs would be: Rural Dressmakers, LE 3.98; Urban Dressmakers, LE 6.62; Urban Tailors, LE 9.72

Source: Table 4.23

The slight differences in costs of the RMC firms occur because the medium firms use an extra step -- they require a wholesaler -- and also have slightly higher losses of cloth and hence higher yarn and cloth costs per unit of output. Offsetting these extra costs is the use of less capital, which results in a smaller value added for the medium RMC firm, and a slight cost advantage over larger firms. This is as much a result of assumptions put into the budgets as conclusive evidence.

9.2.1.2.2 Factors Affecting Total Delivered Cost in the Channels of the Subsector. In addition to the costs added by factors based on the vertical relationships and performance within a channel, there are differences in the total delivered cost of a garment based on factors that vary by firm-groups within an industry. In this section some of the systematic differences in firm-groups are discussed for each industry. Most of the ideas here were not documented quantitatively very closely, but some evidence has been presented.

Some economies of size exist in the retailing industries because there is a certain minimum inventory which most firms must have but a maximum which is not that large. Also, there appear to be economies in labor use and space per unit of sales. The labor economies were seen to be substantial in the value added per laborer calculated in Chapter 4. The existence of economies of size in inventory and space is more of an hypothesis but has been shown to exist in other studies of food retailing (Harrison, et. al., 1974.) A similar set of arguments affects the wholesaler, but most of that industry has advanced to capture these economies of size.

A difficult point to assess is whether having the large weavers and RMC producers work directly with each other is cheaper than using a separate wholesaler. The affirmative has been argued in this research

based on some interviews and evidence. There are likely to be many special cases however.

The garment making stage also exhibits economies of size. The larger garment firms appear to conserve on the use of labor and cloth, although they use more valuable space and large but scarce blocks of capital. This efficiency is gained with some cost in terms of flexibility. Larger firms need longer production runs and thus need larger orders from the retailing stage above. In contrast, the tailors have poor labor productivity and use extra cloth, but they use low opportunity cost space and labor, and so are competitive at current input costs. This is of course highly dependent on the location and sex of the tailor, as shown in Table 9.1.

The medium sized weaving firms are most prevalent in the private sector and appear to be large enough to produce with adequate scale economies. The cost of production is not likely to drop much as firms get larger, or as certain firm-groups become more prevalent. The biggest problems may come from the regulations for allocating yarn on a per loom basis to the private sector, which may be restricting their volume and raising costs.

9.2.1.3 Coordination in the Subsector. Coordination is needed to provide a considerable variety in yarn, cloth, and clothing in the face of advantages of long production runs in spinning, weaving and ready-made clothing. The demand for variety also adds risk to the production process, which must be assessed and handled by the different producers in the subsector. In brief, this fundamental tension is handled in the traditional system by using the cloth wholesaler to aggregate diverse demands and gain a good view of the market; through the inclusion of the consumer before the production of the final garment; and through a

reduction in the variety offered. Furthermore, the inherent risk in the system is potentially large for the small tailors, but they were able to reduce it by an intricate transaction relationship with consumers. (These issues are discussed in more detail in Chapters 5 and 8.)

The modern system handles the central tension in the system quite differently. The larger firms in RMC production, retailing and weaving are able to view the market better and anticipate the demand for variety. The sizes of firms have grown to the point where most variety and production economies are compatible if orders are of the correct size. Cloth wholesaling is done through negotiation and long-term, informal contracts between RMC producers, weavers and perhaps retailers. It is an hypothesis that risk is handled more by a price premium because the firms are sophisticated enough to evaluate profits and add a needed increment to reflect periodic losses. Since the small, private retailer will be most prevalent for some time, a clothing wholesaler may develop to aggregate the small retailers' orders to give to larger RMC firms.

Several coordination mechanisms were assessed to be of particular importance to the evolving system. The first was the increasing incentive of RMC firms to forward integrate into retailing firms. The incentives follow Williamson's theories that firms will forward integrate to guarantee quality of their product. In this case the firms are simply trying to get the retailers to provide RMC products rather than cloth. In addition, the RMC firms have the resources -- large profits -- and the retailers have decent profits, making them more attractive targets.

The public sector uses an important method of coordination. Extensive administrative control, regulation of the private sector's access to public sector products, and considerable vertical integration all give the public sector a unique albeit bureaucratic system of

coordination and influence.

A final important coordination mechanism identified is the tendency for larger RMC firms and weavers to have long-term relationships to avoid the costs of wholesalers and to deal with the complexity of the product, which necessitates advance knowledge of product characteristics. This evolving coordination mechanism may provide the strongest potential within the subsector for higher quality production for exports. The firms are sophisticated, they face a competitive environment, and there are many potential combinations because there are many medium weavers and large RMC firms.

9.2.1.3.1 The Location of Control in the Subsector. The other main conclusion from the investigation of the coordination mechanisms is the location of control within each the system of the subsector. The traditional system uses the wholesaler as control firms because they have the best view of the system, they can potentially handle much of the product with few firms, and also they can most easily revinvest incrementally to respond to changing opportunities.

The modern system, with larger firms, has moved the points of control to the larger retailers, in partnership with the larger RMC firms. These two firm-groups have a good view of the market, are able to influence demand, and are relatively profitable (at this point), so that they are able to respond to opportunities. This partnership is enhanced in the public sector with the additional administrative control.

A final point of control is with the spinning firms. They control the most important input, yarn, since the quality of all other products of the subsector is dependent on the quality of yarn. The decisions to produce a certain mix of qualities of yarn makes it easier (or harder) for the rest of the subsector to provide the quality demanded in their

markets. This technical source of control is increased through the administrative control of all spinning firms by the public sector.

9.2.2 Small Scale Enterprises Revisited

In Chapter 2, a review of the literature on small scale enterprises(SSE) pointed out a number of benefits that occur when production is done in SSE. These included labor intensity, efficient use of capital, and the use of indigenous resources, among others. Also, several dynamic considerations of the role and constraints of growth and change in SSE were outlined. The implications of this research for these issues are outlined in the following sections.

9.2.2.1 The Static Benefits of Production in Small Firms in the Textile Subsector in Egypt. It is clear that small firms, especially in the tailoring and retailing firm-groups, contribute substantially to industrial employment in the subsector and are significant forces in the subsector, based on volume and value added statistics (See Section 9.2.1.2 above.) Also, a substantial number are in the rural areas, implying decentralization of economic activity to where it is most needed.

It appears that small scale industry promotes equity, but it is somewhat difficult to establish this conclusion with certainty. The urban tailors are fairly affluent, far from the poorest of the poor. The rural tailors seem to be poor, so growth in that industry would help a large group of poor workers. The dressmakers are hard to categorize because they were usually earning second incomes for families and some were related to relatively affluent villagers. Without question, though, production using these producers does not lead to a concentration of

wealth and gives decent remuneration relative to the average incomes earned in Egypt.

The final static argument put forth, and in many ways the major one, is that small enterprises use those resources that are plentiful and conserve on scarce resources. Also, the return on the small amount of capital used is quite high. In general, the calculations of capital-labor, output-labor, and capital-output ratios confirm this proposition. The capital required for small tailors is smaller than for the larger firms, and the labor required is greater per unit of output than for larger firms. The data also indicated that the capital required per unit of output was smaller for tailors than for the larger RMC firms. The numbers are examined in detail in Chapter 8, Section 8.2.

The return on investment for the small tailors has not been calculated because of the difficulty in making comparable budgets with RMC firms when much unpaid family labor is used. The small weavers had high returns on total investment relative to their larger competitors, but the economies of size in distribution put the small wholesalers and retailers at a disadvantage compared with larger firms.

9.2.2.2 The Dynamics of Small Firms in the Textile Subsector. The second set of conclusions relates to the dynamic implications of the research for SSE. The small tailoring firms have many strengths that would make them the initial entrants into the industry, including being where demand is, having an ease of entry and exit to respond to the erratic nature of demand, and using a set of standard operating procedures that are appropriate in an environment where there is much uncertainty and low incomes. These same sets of characteristics are similarly important in restricting the growth of the firms to the next level of operation.

The internal constraints to growth are those that make the small firms viable in the first place. The ease of exit and entry is related to the cost of capital and the skills required, and the ubiquitous need for people to have clothing made. On the other hand, it is hard for these firms to expand demand and grow because of the conservative approach to demand they use -- letting it come in the door. Also, it is easy for laborers to go into business on their own because of the low costs of entry. Both of these factors tend to keep the firms small and dispersed.

In addition to the above technical and market constraints, there are several barriers to entry. Most firms cannot make the transition to the next stage because it requires more demand concentrated in a small area, which is not available to most of the dispersed firms. The technology is discontinuous with regard to management requirements, production for inventory and the consequent need for working capital, and the physical capital needed as well, so most small firms cannot make an easy transition to RMC production.

The above are mainly internal constraints. The use of the subsector approach indicates other external constraints to the expansion of the small tailor. The coordination mechanisms that are evolving as the large firms grow tend to come at the expense of the smaller firms. The large RMC firms have the reasons, the resources and the market share to "push" the retailers towards the provision of RMC products, and their success will probably come at the expense of the small firms. Additionally, RMC firms and weavers have an incentive to interact and avoid the wholesaler because small increments in prices received can mean large gains in profits. This results in a cutting off of the small tailors' supply lines. Finally, the public sector, with large firms and

probably an image of RMC production as a progressive product, will move to shift the system in that direction.

A final comment can be made regarding the policies which may be appropriate for the SSE. Scarce development capital should not be aimed directly at tailors and dressmakers because there are too many constraints for projects to make much of a difference, especially aimed at production. The transactions costs of the projects can be enormous and the returns small. On the other hand, the typical sewing class done by PVOs and the government centers should not viewed with disdain because they create skills for those persons who will ultimately fashion much of the subsector's cloth into clothing. This is a benefit that is probably overlooked in the assessment of these programs and should be included.

9.2.3 The Evolution of the Subsector

The research has indicated that the traditional and modern systems seem to be appropriate under different environmental conditions, and the traditional system has many benefits given the level of development of the Egyptian economy. The relative scarcity of capital and abundance of labor are two central features that make the traditional system, especially the tailor and dressmakers, appropriate because of their labor intensity and probable conservation of capital resources. With a poorly developed infrastructure and large scarcity of land, the use of underutilized resources by the tailoring channel -- production within the home using small pools of capital -- is a positive development benefit. In addition, the large static benefits of employment and low-cost production, with an alternative allowed for home-fashioning, are very important attributes that make the traditional system appropriate.

The benefits of the traditional channels are largely at the upper end of the subsector, and the lower part of the system that has been characterized as traditional is largely atrophfied and been replaced by larger weavers and wholesalers. Even at the current level of development in Egypt, the medium-sized weaver and the larger cloth wholesaler make sense.

At the present state of development, the existence of the RMC firms is less appropriate, although not without certain advantages. There is a middle and upper class, as well as those who are more Western-oriented and prefer ready-made clothes, and their preferecnes are being met by the RMC producers. There are also some kinds of RMC production, such as knit sport shirts, underwear and socks, that are currently cheaper when produced by ready-made producers. Finally, certain types of fashions, such as jeans and corduroy pants, are difficult to make without specialized machinery and thus have been produced in RMC firms. The most important value of the RMC firm-groups probably comes from their better ability to use Egypt's available raw materials to export higher valued RMC products. Thus the present mixture of systems has certain benefits.

Several natural changes during development should make the attributes of the modern system more attractive and a transition should logically occur: an increase in per capita incomes; the improvement of infrastructure, especially financial institutions needed to mobilize capital; and the evolution of the society to a higher density housing structure which would increase the demand within retail stores and turnover, and hence the "production" of retailing space. The main liability of the current evolution is that the modern system may arise before its time.

The main forces are regulatory, where certain sets of regulations outlined in Chapter 8 are perhaps forcing the transition. However, some of the internal dynamics of the modern system are pushing the transition as well. Given the profitability of the RMC firms and the incentives to coordinate directly with weavers and retailers, these firms can "buy" the transition by forward integration, and alternatively "cut" the supply lines to the traditional system. This systematic movement will force the system, within limits however, to move more quickly to ready-made clothes as the final commodity sold. Finally, the control over the system exerted through the public sector means that their influence will affect the transition profoundly, and there is evidence they favor a move to more ready-made clothing. In the face of these pressures, the Popular Supply Program, which provides subsidized cloth to many poor families, is an important bulwark resisting these changes.

In addition to identifying this fundamental dynamic and problem, several quantitative projections were made. The most important was the possible loss of up one million jobs if the transition occurs, with RMC firms increasing their productivity and adding some of the demand from the currently home-fashioned garments. While this is an extreme projection, and ignores some of the realities of demand responses to prices and incomes, it indicates that the stakes are large. Also, the combined occurance of a transition to RMC clothing with retailing that continues to be done by small retailers would lead to higher cost retailing, with more than LE 20 million in additional costs from using high cost space to retail RMC products.

A final set of conclusions about the evolution of the subsector is about the past evolution. Each of the industries exhibits a unique structure in terms of the relative prevalence of large and small firms.

The impact of exogenous political decisions and the influence of outside parties has been large. The RMC and retailing firm structures have been affected by the presence of colonial department store chains and military purchases of RMC products. The weaving structure has also been affected by the decisions of the colonial powers to build a cotton economy and the subsequent efforts of local and foreign operators.

Accumulation over time appears to be playing a part as well. The predominance of the medium weaver in the private sector and the medium and large RMC producers appear to be the result of steady accumulation. Accumulation has its limits as well, as the prevalence of the small tailor, retailer and wholesaler attest. The evidence of these latter points is quite ancedotal and speculative, but offers some working hypotheses for further study.

9.2.4 The Adequacy of the Subsector Methodology

Using the subsector methodology has highlighted insights, which may not have been clear without its application. The addition of the analysis of coordination, including understanding the location of control and the interdependencies between stages, has yielded several insights. The impact of the decisions of public sector spinners is clearly drawn by understanding the production processes and sources of costs in the stages above yarn manufacture. The gains from interacting directly with weavers by RMC producers was also derived from an understanding of the sources of cost reduction and their limits within each of the stages. Thus, the organic view of the economic subsector put forth in this research has shown that many costs are reduced or increased by decisions in firms quite far from a particular industry.

A second set of insights that help analyze growth and change in the subsector is found in understanding the pattern of profits throughout the subsector and the opportunities for reinvestment. While the results are tenative, they indicate systematic movement in and out of certain industries, with important impacts on the subsector and the transition from a tradiional to modern system. A difficult but perhaps useful model might be a flow of funds model, which would look at corporate profits, access to outside finance, the terms of trade and bargaining power of different firm-groups within the subsector to better understand growth and change.

Finally, the data analysis procedure, which consisted of reconciling the aggregate number of firms, employment, and production with the synthetic micro budgets, appears to yield considerable power. The most important and surprising result from this analysis was the extent of home-fashioning of cloth. While this conclusion is not completely beyond doubt, it does allow a framework so that other researchers can use better data when they have it and make use of the first approximations gained here in other areas. Specification of many subsectors in developing countries to this degree would probably yield valuable insights.

9.3 Recommendations

The recommendations are basically in two areas, on policy and projects to improve the performance of the subsector, and on further research. Most of the recommendations for policies and projects have been presented in detail in Chapter 8, so only a simple summary is presented here.

9.3.1 Recommendations for Policies and Projects

The most active recommendations are for two projects, the creation of a semi-traditional channel and a suggestion for promoting exports. The spirit of these interventions is to make use of the current institutional environment and capabilities, to be consistent with the perceived evolutionary forces currently at work, and also to move the system so that it responds to the true scarcity of resources in the country.

It is recommended that the public sector wholesalers, who administer the Popular Supply Program of subsidized cloth, try to direct the program through tailors and dressmakers. This would move retailing into low-cost space; it would make use of the coordination capabilities of wholesalers, who can better anticipate demand; and it would reduce the losses of cloth that occur in the private sector cloth retailers. The mechanisms are discussed in Chapter 8. If successful, this project could be expanded to the private wholesalers, and cut but not sewn RMC products could be distributed through the project. The project may reduce distribution costs and losses of cloth and increase the incomes of tailors and dressmakers, while perhaps directing more demand towards them. It could be administered under current institutions, probably with some initial aid or subsidies.

The second project is aimed at the larger RMC producers and weavers in the private sector. These firms often work closely with each other and probably have the most opportunity to increase exports of clothing. One of their major constraints is the quality of yarn. It is recommended that the public spinning firms identify their best quality

yarn for export, and create a system of allocating it. This might be done by selling medallions, which would entitle the RMC firms or their weavers, whoever buys them, to export quality yarn. By showing the medallion, various export procedures could be avoided or simplified. If the yarn was not used for export, a penalty might be levied. This would get the good quality yarn into the right hands and reduce the bureaucratic obstacles to exporting. The Cotton Textile Consolidation Fund (CTCF) might be an appropriate organization to administer the program.

Several policies have been identifed for review and perhaps for change in Chapter 8 as well. The mark ups on distribution should be reviewed to see if they are forcing the system towards the provision of ready-made clothing. The Law 43 administrators should also make sure that they allocate permits in line with the needs of the system, which may not be great if indications in this research are correct. Furthermore, the yarn allocation procedures should be reviewed to make sure that enough yarn is getting to the private weavers to cover their demands. If the the RMC firms are growing too fast, a study considering the implications of restricting them to the production of modern clothes might be warranted.

9.3.2 Recommendations for Further Research

In some sense the recommendations for policy and projects will require further research and study to see if they are valid, so those recommendations are in fact recommendations for further research. Most of the recommendations for further research in this section relate to improving the understanding of the transition. Given the resources and

access to data in this project, much use had to be made of averages, especially in analyzing demand and the products of the RMC firms. Much understanding of the transition could be gained if an in-depth study of the reasons that people choose ready-made versus tailored products were made. Income has been tenatively identified as an important variable. Other preferences may increase or impede the transition, such as positive or negative impressions of branded products, the utility gained from going to a tailor and whether there are certain groups that systematically buy either tailored or ready-made clothing. This would aid an understanding of how fast and far the transition might move, given alternative price scenarios and changes within groups.

On the supply side, a similar analysis might be helpful as well. Understanding the products produced by different RMC firms might allow a more detailed understanding of actual costs and comparative advantages of RMC producers versus tailors and dressmakers. This also would help assess how the transition is likely to occur.

Finally, a more detailed simulation could be done analyzing the quantitative impacts of the transition. The projections in this research were quite simple, mainly aimed at assessing the employment implications of alternative evolutions in the subsector. The actual accumulation process and the resulting growth and change of firms could be modelled, taking into account productivity growth, the changes in prices throughout the system, and changes in the transactions relationships. This could probably be done short of a major simluation model and could add a more subtle understanding of the evolution of the textile subsector.

APPENDIX 1

ESTIMATION OF THE NUMBER OF FIRMS AND EMPLOYMENT IN THE TEXTILE SUBSECTOR IN EGYPT, 1979

The values for the number of firms and employment in each firm-group of the subsector, as presented in the subsector map in Chapter 3, are constructed in this Appendix. The discussions are separated by economic stages and presented as they occur in the vertical transformation process. The extent of vertical integration is estimated at the end of the appendix.

The figures used to estimate the number of firms and employment are drawn from a variety of different years. The spinning and weaving figures are adjusted to 1979, as are the tailoring and dressmaking calculations. The others functions are not changed because the year used was close to 1979, or the employment is not changed materially by adjusting them, or it is not known in which direction to make an adjustment.

A1.1 The Number of Firms and Employment in the Spinning Industry

Ginned cotton and shorn wool are spun into yarn in the spinning firms, and virtually all of these companies are in the public sector. The aggregate data is fairly accessible but there is extensive vertical integration between spinning and weaving, so the relative employment

TABLE A1.1

Public Sector Textile Employment
By Company and Function

Egypt, 1974

Company	Production	Maint. Service	Marketing	Admin.	Social/ Other	TOTAL
1. Mehalla El Kubra	22532	4810	627	1696	5603	35268
2. Esco	13022	4356	383	2501	2996	23258
3. Misr-Helwan	10252	3346	438	1300	1903	17239
4. National	8747	3947	325	1002	1962	15983
5. El Siouf	7002	2668	94	719	1069	11552
6. "Chourbagi"	3220	887	176	421	522	5226
7. Orient Lin./ Cot.	5068	836	124	597	757	7382
8. Kafr El Dawar	12162	4353	234	1570	2364	20683
9. El Nasr Damietta	3837	851	303	706	1374	7071
10. Dakhalia	3619	705	127	782	1959	7192
11. Upper Egypt	1688	368	48	214	571	2889
12. Central Egypt	5962	1108	249	697	2402	10418
13. Misr Sheb. El Kom	4024	2272	141	922	2366	9725
14. Arab and United	5616	1323	198	992	2039	10168
15. The Alex Sp/Weav	4090	1155	127	550	977	6899
16. The Delta Sp/Weav	2098	749	66	547	672	4132
17. El Buria	3613	1179	309	681	881	6663
18. El Nasr Dye/Fin.	4158	1418	140	633	945	7294
19. Cairo Sp./Weav/Dye	4971	1829	223	768	947	8738
20. Modern Textiles	1033	288	35	220	268	1844
21. 'Stia	5923	1671	317	882	1048	9841
22. Wooltex	6363	1293	129	834	880	9499
23. El Nasr/Port Said	1403	373	73	446	169	2464
24. El Nasr Clothing	6408	1031	510	837	664	9450
25. Misr Rayon	2495	2394	121	791	840	6641
26. Central Jute	3182	1868	8	358	808	6224
27. Arab Carpet	1062	252	81	271	410	2076
TOTAL	153550	47330	5606	21937	37396	265819

Source: USAID, 1976

in each function is not easily determined.

The total employment in twenty-seven public sector companies was 265,819 in 1974 (Table A1.1.) Three companies, with an employment of 20,230, did not have either spindles or looms as part of their capital equipment, so they obviously did not participate in either spinning or weaving (See Table A1.2.) (Two of the three companies were specialized in different raw materials--jute and rayon.) Some of the remaining 245,589 employees also were engaged in printing and dyeing, or garment-making.

Table A1.1 makes clear that the actual employment per function is hard to determine because the categories of laborers are not separated by the products made. Fortunately, a profit analysis by product group for the Mehalla El Kubra Company is available for 1974, and is shown in Table A1.3. Also, the employment for that firm for 1974 is known (Table A1.1.)

The line items in Table A1.3 that are mainly wage payments, Lines 3, 6, 15, and 16, are used to estimate the average wage per employee, by dividing them by the total employment figures from Table A1.1 for the Mehalla Kubra Company. From the average wage, the number of employees working in each product line can be approximated by dividing the total wage payment per product by the average wage. The total number of employees (including sales and administrative functions) in the spinning and weaving functions can then be divided by the number of spindles (for spinning) and looms (for weaving) to get a coefficient of employment per spindle or loom.

The results of this calculation yielded coefficients of 24 spindles/employee for cotton spinning, 9 spindles per employee for the wool system, and 3.7 and 13.6 employees per loom for the cotton and wool systems in weaving. For the cotton weaving coefficients, this seemed in

rough accord with figures in the literature, although slightly high (ILO, 1983.) However, there is probably some excess employment in the public sector and this figure may include workers in different shifts as well. The number of employees per loom for wool seems quite high, although it provides consistent estimates. Since wool is a minor product, it does not affect the picture of the subsector, and is used in this instance only.

The results of multiplying these coefficients by the spindles and looms in each company are reported in Table A1.4. The first column shows the total employment in each firm in 1974, taken from Table A1.1. The next two columns present the estimated employment in spinning and weaving using the derived coefficients and the number of spindles or looms reported in Table A1.2. The column on the right indicates the difference between the results using the derived coefficients and the reported employment per company in Table A1.1.

While hardly perfect, using this method only caused the total estimated employment to exceed the actual employment in two cases. The public sector employment in spinning and weaving together was estimated by the Central Bank of Egypt at 202,903 employees in 1974 (Central Bank of Egypt (hereafter CBE), 1980, p. 99.) This is quite close to the estimates made here.

For several firms there is considerable employment not included in spinning and weaving (shown in Column 4 of Table A1.4.) Many of those firms with the highest figures in Column 4 are involved in printing and dyeing or garment manufacture, as evidenced by their company names, so the large differences are not necessarily errors.

TABLE A1.2

PUBLIC SECTOR SPINNING AND WEAVING EQUIPMENT - 1975

COMPANY	COTTON SYSTEM		WOOLLEN/WORSTED SYSTEM	
	SPINDLES	LOOMS	SPINDLES	LOOMS
Mehalla El-Kubre	272,840	4,470	14,620	176
ESCO	224,980	2,372	2,880	56
Misr Helwan	117,048	2,762	-	-
National	165,968	2,068	-	-
El Siouf	104,664	1,716	-	-
Chourbagui	28,368	372	-	-
Orient	38,800	630	-	-
Kafr El Dawar	232,244	3,672	-	-
Damietta	59,104	770	-	-
Dakahlia	114,448	-	-	-
Wooltex	-	-	32,665	482
Modern Textiles	-	433	-	-
Upper Egypt	43,496	-	1,988	-
Central Egypt	119,880	958	-	-
Shebin El Kom	160,400	-	-	-
Arab and United	94,488	256	-	-
Alexandria	101,252	-	-	-
STIA	39,574	228	17,510	354
El Nasr Dyeing	-	993	-	-
Cairo Spinning, Weaving & Dyeing	-	1,340	-	-
El Nasr Port Said	-	358	3,200	20
El Nasr Clothing	6,000	-	-	-
Arab Carpet	-	-	780	12 (+ 1 tufting)
Delta Spinning and Weaving	51,152	264	-	-
TOTAL	1,974,700	23,356	73,643	1,100

Source: WERNER RESEARCH

Table A1.3

PROFIT ANALYSIS BY PRODUCT GROUPS – 1974

(IN £E 1,000)

Item	Total		Cotton Spinning		Cotton Fabrics		Cotton/ Wool		Ready-made Garments		Carded Wool Yarn		Worsted Wool Yarn		Wool Fabrics	
	Amount	%	Amount	%	Amount	%	Amount	%	Amount	%	Amount	%	Amount	%	Amount	%
1. Material Used (Incl. Spare Parts & Packing)	20,631	85.4	13,586	67.9	2,336	10.3	532	64.0	185	3.6	495	75.1	3,310	85.2	177	4.1
2. Transfers in Of Processed Material	–	–	–	–	13,133	57.8	–	–	4,092	78.8	–	–	–	–	2,182	74.3
3. Departmental Wages	8,320	22.4	2,797	14.0	3,685	16.2	130	15.6	677	13.0	114	17.3	363	9.4	554	12.9
4. Departmental Services	208	.5	12	–	137	.6	16	1.9	28	.5	1	.2	1	–	11	.3
5. Depreciation and Indirect Taxes	3,669	9.9	2,400	12.0	828	3.6	54	6.5	56	1.1	30	4.6	227	5.8	74	1.7
6. Allocated Production Service Expense	6,132	13.8	1,773	8.8	2,614	11.5	100	12.0	155	3.0	39	5.9	161	4.1	290	6.8
7. Subtotal (1.+2.+3.+4.+5.+6.)	37,958	102.0	20,578	102.7	22,733	100.0	832	100.0	5,193	100.0	679	103.0	4,062	104.5	4,288	100.1
8. Less Sales of Waste and Services	756	2.0	549	2.7	6	–	–	–	–	–	20	3.0	176	4.5	5	.1
9. Total Production Cost (7. – 8.)	37,202	100.0	20,029	100.0	22,727	100.0	832	100.0	5,193	100.0	659	100.0	3,886	100.0	4,283	100.0
10. Transfers to Other Departments	–	–	13,133	65.6	3,121	13.7	41	4.9	–	–	568	86.2	2,573	66.2	971	22.7
11. Inventory Build-up (Decrease)	2,350	6.3	266	1.3	1,087	4.8	88	10.6	69	1.3	3	.5	172	4.4	885	16.5
12. Net Sales	48,748	100.0	12,202	100.0	23,369	100.0	883	100.0	6,580	100.0	106	100.0	1,372	100.0	4,227	100.0
13. Cost of Sales (9.–10.–11.)	34,852	71.5	6,630	54.3	18,519	79.2	703	79.6	5,124	77.7	88	83.0	1,141	83.1	2,647	62.6
14. Gross Margin (12. – 13.)	13,897	28.5	5,572	45.7	4,850	20.8	180	20.4	1,456	22.3	18	17.0	231	16.9	1,580	37.4
15. Marketing Expenses	984	2.0	257	2.1	468	2.0	17	1.9	130	2.0	2	1.8	27	2.0	83	2.0
16. Administrative Expenses	2,823	5.8	707	5.8	1,363	5.8	51	5.8	382	5.8	6	5.8	79	5.8	245	5.8
17. Operating Profit (14.–15.–16.)	10,090	20.7	4,608	37.8	3,029	13.0	112	12.7	964	14.5	10	9.4	125	9.1	1,252	29.6
18. Subsidies	1,268	2.6	847	6.9	422	1.8	–	–	–	–	–	–	–	–	–	–
19. Operating Profit After Subsidies (17.+18.)	11,358	23.3	5,455	44.7	3,451	14.8	112	12.7	964	14.5	10	9.4	125	9.1	1,252	29.6

Source: USAID, 1976

TABLE A1.4

Estimated Weaving, Spinning, and Other
Employment in the
Public Sector Textile Companies

Egypt, 1974

Company Name	Total Employees	Est. Spinning Emp.	Est. Weaving Emp.	Unallocated (Col. 1- Col. 2/3)
1. Mehalla El Kubra	35268	12992	18933	3343
2. Esco	23258	9694	9538	4026
3. Misr-Helwan	17239	4877	10219	2143
4. National	15983	6915	7651	1417
5. El Siouf	11552	4361	6349	842
6. "Chourbagi"	5226	1182	1376	2668
7. Orient Linen and Cotton	7382	1616	2331	3435
8. Kafr El Dawar	20683	9676	13586	-2579
9. El Nasr Damietta	7071	2462	2849	1760
10. Dakhalia	7192	4768	0	2424
11. Upper Egypt	2889	2033	0	856
12. Central Egypt	10418	4995	3544	1879
13. Misr Shebin El Kom	9725	6683	0	3042
14. Arab and United Spinning	10168	3937	947	5284
15. The Alex Sp. and Weav. Co	6899	4218	0	2681
16. The Delta Sp. and Weav. Co	4132	2131	976	1025
17. El Buria	6663	0	0	6663
18. El Nasr Dyeing and Finish.	7294	0	3674	3620
19. Cairo Sp., Weav.and Dyeing	8738	0	4958	3780
20. Modern Textiles	1844	0	1602	242
21. 'Stia	9841	3594	5658	589
22. Wooltex	9499	3629	6555	-685
23. El Nasr - Port Said	2464	355	1597	512
24. El Nasr Clothing	9450	250	0	9200
25. Misr Rayon	6641	0	0	6641
26. Central Jute Products	6224	0	0	6224
27. Arab Carpet and Uphols.	2076	86	163	1827
TOTAL	265819	90454	102506	72859

Source: Compiled by the Author from USAID, 1976

Since these estimates were made for 1974, an adjustment for the growth in the sector to 1979 was needed. This was done by using the increase in the number of spindles and looms in the public sector during those five years, and applying those growth rates to the number of employees. The growth in spinning capacity was 2.6% per annum, while the corresponding weaving figure was 2.0% (Federation of Egyptian Industries (hereafter FEI), 1980, p. 131, 141.) For the spinning industry this growth increased the total employment in 1979 to 103,000 workers.

A1.2 The Number of Firms and Employment in the Weaving and Knitting Industry.

After spinning, yarn is either woven or knit into fabric. These functions are included together, since both follow spinning, and the output does not go through distinct channels in the remainder of the subsector. The estimates of the number of firms and employment for weaving in the public sector has been shown previously. Table A1.4 shows that there are 19 firms and an employment of 102,506 in that sector. Increasing that figure by 2.0% per year for five years (until 1979) yields 113,000 workers in the public sector weaving industry.

The knitting function must be estimated more round-aboutly. An Arthur D. Little (hereafter ADL) report stated that four public sector firms exist, while another report, a Trade Chamber report, claims six, of which four are only partially involved in knitting and two are specialized in knitting. The Trade Chamber report also states that there were 873 knitting machines in the public sector in 1977; but it is not clear whether they are included in the number of looms reported in Table A1.2 or not. It is assumed that the knit output of the four

non-specialized firms is included in that Table, so that most of the knitting employment is already included, or is in Column 4 of Table A1.4. It is clear, also, that any reasonable assumptions about employment per knitting machine or the overlap of knitting and weaving will not materially affect the picture of this part of the subsector. Therefore, two firms with a total of 2000 employees, representing the specialized knitting firms, are added to the public sector totals for weaving. The 103,000 employees in spinning and the 115,000 workers in weaving make the total in those two functions exactly equal to a separate estimate of 218,000 employees in 1978 (CBE, 1980, p. 97.)

A.D Little estimated that 650 firms were in the private sector weaving industry, and they also gave the distribution of the number of looms used by these firms, excluding knitting. There were only 10 firms with more than 100 looms, and 20% percent (130 firms) had only one or two looms. Thus, the bulk of the firms had between 2 and 100 looms. A separate estimate stated that there were approximately 13.7 thousand mechanical looms in the private sector weaving firms (FEI, 1980, p. 141.)

In Appendix 3, more looms than given above were required to make the system "reconcile" with different types of data, even assuming fairly high levels of output. Therefore, a better asssumption seemed to be that there were more looms but with less production per loom. Table A1.5 shows the number of looms used in Appendix 3, by size of firm, and also includes the total employment for each firm-group. The total number of looms exceeds the other estimates by about 1,000 looms, but it reconciles better with other data.

Also, the all-purpose figure of 3.7 workers per loom seemed somewhat high but acceptable for the public sector, given extra employment and possibly more shifts than in the private sector. In the

private sector this figure was dropped to 3.0 workers per loom. (See Appendix 3 for further explanation.)

Therefore, 650 firms employ 44,310 workers in the private sector weaving stage, with most employment by far found in the medium sized firms. A similar analysis was performed to estimate the private sector knitting firms and employment. This yielded about the same number of firms, 650, who had 14,000 employees, substantially less than in the weaving firms.

TABLE A1.5

Estimated Employment in the Private Sector Weaving Stage
By Firm Size

Egypt, 1974

Firm Size	No. of Firms	Average # of Looms	Total Looms	Employment/ Loom	Total Employ.
Small	130	2	260	3.0	780
Medium	510	26	13260	3.0	39780
Large	10	125	1250	3.0	3750
Totals	650	-	14770	-	44310

Source: Compiled by the Author

These estimates compare fairly well with the estimate of the relative shares of total output for the private and public sectors (ADL, 1982, p. A-3.) Sixty-five percent of total output was in the public sector, leaving thirty-five percent in the private sector. In these estimates 66% of total employment including knitting is in the public sector and 44% is in the private sector.

A1.3The Number of Firms and Employment in the Wholesaling Industry

There were two public sector wholesalers in Egypt in 1975 and 550 private sector wholesalers (Werner International (hereafter WI), 1976, p. 40.) For 1976, a Population Census estimated that 2,223 persons had textile wholesaling as their occupation (PADCO, 1982, p. 163.) Additionally, discussions with major participants in the wholesaling industry indicated that only a small group of private sector producers, perhaps only ten, are large -- with more than one million Egyptian pounds in sales. Most of the remainder are clustered in several areas of the major cities and are very small.

Using an average employment of three persons for each of the 540 small firms implies that their total employment is 1,620 persons. A figure of three persons per firm seems reasonable because the average size of firms interviewed and observed in the wholesaling districts during this research seemed to be no larger than three. Also, an average of five persons per firm in general wholesaling was used to estimate the anticipated trade employment in one of the new cities -- Sadat City -- but this probably reflects a larger facility than currently exists in the central cities where space is at a much higher premium. (PADCO, 1982, p. 185.)

While these figures reconcile well with the aggregate data, there were problems in estimating budgets that yield profitable small wholesaling operations with three employees. The source of the problem may not be the number of employees -- more likely it is that there are fewer firms or more sales -- but to make an adjustment the average number of employees used is two employees in each small firm. Thus, 540 small firms have 1,080 employees. This uncertainty has little effect because

of the small number of employees involved with either assumption.

There are 603 employees are in the two public sector wholesalers and the ten larger private sector wholesalers, ignoring the laborers who were dropped from the small firm employment. Using an arbitrary decision to split the remaining employment equally between the public and private sectors gives an average employment of 150 persons in each of the two public sector firms and 30 persons in the ten private sector firms.

A1.4 The Number of Firms and Employment in the Garment Making Industry.

This industry is broken into two main groups, the ready-made garment firms and the tailoring and dressmaking firms. Each of these firm-groups is discussed in a separate section below.

A1.4.1 The Number of Firms and Employment in the Ready-made Garment Firms

In 1977 there were ten public sector and three hundred private sector ready-made garment firms with more than ten workers (ADL, 1982, p. A-3.) These firms employed about 27,000 employees, including ready-made knitwear as well as garments, with 10,500 in the ten public sector firms and 16,500 in the private sector (Trade Chamber, 1979, p. 8.) This latter figure is different in the Werner International report, which estimates that there are 25,000 workers in the private sector.

The ADL report further states that in the 300 firms with more than 10 employees in the private sector, 50% percent had between 10 and 50 employees, 25% were in firms with 50 to 100 employees, and the final 25% were in firms with greater than 100 employees. If the two estimates of employment are averaged, about 20,750 employees are in the private

sector. (The Werner International report may have been including firms with less than ten workers, which would account for some of the discrepancy. However, the estimates for that group derived here do not account for the difference of 10,000 employees in the reports, since there are only several thousand employees in the smallest firms.)

This total employment is consistent with an average firm size of 25 workers for firms with 10 to 50 employees, 75 for firms with 50 to 100 employees, and 150 for firms with more than 100 employees. Based on this exercise, the ready-made garment industry has 300 private sector firms with 20,625 employees in the larger firm-groups. The total employment in firms having between 10 and 50 workers was 3,750; for those with less than 100, the employment was 5,625; and in those firms with more than 100 employees there were 11,250 workers.

A rough estimate of the number of firms with less than ten employees and their employment in ready-made garments is derived from the Checci and MSU studies. Checci reports that 670 firms produced ready-made garments in the four areas they studied -- Cairo, Alexandria, Damietta, and Assiut (Checci, 1982, p. 62.) About 612 of these firms, or 91.3%, employed less than ten workers (Checci, 1982, p. 11.) Assuming that all firms outside of Cairo or Alexandria had less than ten workers, there were 120 small firms located in Assiut and Damietta, leaving 492 firms inside the main urban areas. Using the average number of workers per firm with less than ten employees from the Checci study, (estimated as 3.0), the firms in Cairo and Alexandria had 1,476 employees.

To estimate the non-Cairo and non-Alexandria figures, the 120 firms in Assiut and Damietta found in the Checci study were added to the single ready-made clothing firm found in the two areas of the MSU study (MSU Phase I data, unpublished.) The firms reported in these two studies

were drawn from a population of about five million in 1981, giving a coefficient of 24.2 firms/million people. The non-Cairo and non-Alexandria population in 1979 was 30.1 million (FEI, 1980, III - 3.) Using the estimated number of firms per million population yields 730 firms outside of Cairo and Alexandria. With an average number of workers of 3.0, these firms employed 2,190 workers. Thus, the ready-made garment industry had 1,222 firms with less than ten employees for a total of 3,666 workers. Altogether the RMC industry had 1,522 firms with 26,255 employees in the private sector, and 10 firms with 10,500 employees in the public sector.

The population figures used in these procedures were taken from the governorate-level population figures reported by CAPMAS in their 1976 Census of Population. These base figures were multiplied by a 2.7% growth rate for three years to give an estimate of the 1979 population.

A1.4.2 The Number of Firms and Employment in the Tailoring and Dressmaking Firms.

A somewhat different method of estimation is used to get the population of tailors and dressmakers throughout the whole country. The MSU study is used exclusively because its surveying procedures were designed to identify the production located in the home and in rural areas, although urban areas were surveyed as well. The results are from Kalyubiya and are presented for both rural and urban firms.

The MSU Phase I survey, from which this data is drawn, estimated the tailoring and dressmaking firms in a rural population of 987,133 persons in Kalyubiya governorate and for a urban population of 334,314 (unpublished Phase I data.) The tailors and dressmakers estimated in

this population are shown in Table A1.6, along with some of the more important labor force characteristics. (The estimates represent the sampled firms multiplied by the inverse of the sampling ratio for four village population strata in rural areas, and for two urban population strata. See Badr, et al, 1982, for more details.)

This data can be converted to a per million population basis and used to estimate the number of tailors and dressmakers in the entire Egyptian population, assuming that the coefficients from Kalyubiya are valid for the other regions of Egypt. In 1979, there were about 41 million people in Egypt, with 45% urban, or 18.3 million, and 55% rural, or 22.7 million. The data reported in Table A1.6 is converted to population estimates for all of Egypt in Table A1.7 under the headings of "Rural" and "Phase II Urban".

There were difficulties in locating urban tailoring firms because the enumerators had many houses to cover and producers are hard to find in urban areas. The best coverage in Kalyubiya was in Tukh, a relatively small urban area but which is an urbanized county seat, and it is located on the main highway between Cairo and Alexandria. In addition, many of the enumerators were from Tukh and were able to locate more workers in their homes.

Tukh had 68 tailors and 125 workers in a population of 22,712, or 2,994 firms and 5,503 workers on a per million population basis. For dressmakers, there were 63 firms and 122 employees, or 2,774 firms and 5,371 employees on a per million basis. These coefficients were used for the High Urban estimates, and produced extremely large numbers. Therefore the final estimate of the number of urban tailors and dressmakers is the Average Urban estimate, which is the average of the estimate for the Phase II data and the Tukh-based estimate.

TABLE A1.6

Estimated Tailoring and Dressmaking Firms
and Employment
in Kalyubiya Governorate, 1982

(Rural and Urban Producers)

Tailors

	Firms (#)	Total Employ-ment	Male	Female	Hired	Family	Appren-tice
Rural	1252	2332	2177	155	479	1493	360
Urban	488	1175	1153	22	438	562	175
Sub-Total	1740	3507	3330	177	917	2055	535

Dressmakers

	Firms (#)	Total Employ-ment	Male	Female	Hired	Family	Appren-tice
Rural	2560	3769	153	3616	180	2814	775
Urban	299	573	89	484	59	348	166
Sub-Total	2859	4342	242	4100	239	3162	941
TOTAL	4599	7849	3572	4277	1156	5217	1476

Source: MSU Phase II Survey

TABLE A1.7

Estimated Number of Tailoring and Dressmaking Firms and their Employment

By Rural and Urban Producers

Egypt, 1979

('000 Persons)

TAILORS

	Firms (#)	Total Employ-ment	Male	Female	Hired	Family	Appren-tice
Rural	28791	53626	50062	3564	11015	34332	8279
Urban-P2*	26712	64318	63114	1204	23976	30763	9579
Urban-H*	56122	144432	139480	4952	48694	66852	28886
Urban-A*	41417	104375	101297	3078	36335	48807	19233

DRESSMAKERS

	Firms (#)	Total Employ-ment	Male	Female	Hired	Family	Appren-tice
Rural	58869	86672	3519	83153	4139	64711	17822
Urban-P2*	16367	31365	4872	26493	3230	19048	9087
Urban-H*	51996	113895	13205	100690	6602	58599	48694
Urban-A*	34182	72360	9039	63591	4916	38824	28890

* The "P2" refers to the MSU Phase II Survey, the "H" refers to the High Urban estimate, and the "A" refers to the Average Urban estimate

Source: MSU Phase II Survey

A1.5 The Number of Firms and Employment in the Retailing Industry.

The total figure for retailing employment in textiles is best estimated by the Population Census of 1976, which counted 39,355 persons working in retailing (PADCO, 1982, p. 163.) The Werner International report stated that there were six public sector retailers with four hundred branches (WI, 1976, p. 40.) Furthermore, the reported distribution of employment in retailing between the public and private sector indicated that only 5.1% was in the public sector. (PADCO, 1982, p. 165.) The textile percentage is probably higher because of the importance of textiles in many public sector retailing outlets.

Branches of public sector firms in the new cities were estimated to have about thirty employees (PADCO, 1982, p. 167.) This research assumes, based on personal observation, that a reasonable estimate for the employment in textile retailing in the public sector department store would be ten employees, or one-third of the employees in the store. This means that about 4,000 employees, or ten percent of the textile retailing industry's total employment are in 400 branches of six public sector stores.

The private retailing includes both informal, or itinerant, and formal retailers. The 1976 Census estimated that 61% of all retailing employment was in the informal sector. Unfortunately, no industry breakdown is available nor is the number of private establishments available. (The Werner International report also states that there are 105,300 firms in the private sector, but this data does not correspond at all to the estimate of retailing employment from the Population Census and it is ignored.)

It seems plausible that the itinerant proportion of employment for

textile retailing is much lower than the average for all retailing. Carrying enough inventory to offer sufficient variety would require a large investment and bulky inventory, both of which are difficult for the small peddler to manage. Also, consumers purchase textile goods relatively infrequently and can wait until they can go to a store with a larger inventory and better selection, and often must go to registered retailers to purchase rationed cloth. Interestingly, the peddlers usually specialize in rather homogenous commodities, such as stretch socks, handkerchiefs, scarves, and knit hats, rather than shirts, pants, or cloth, supporting the fact that they might need to keep their inventories small.

From this argument, it seems that itinerant retailers might be 25% of total employment, rather than 61%. The picture of the retailing industry thus emerges by using two rather strong assumptions regarding the itinerant proportion and the number of employees per branch in the public sector. It shows a public sector of 4,000 employees, 26,000 persons employed by the private sector in fixed locations, and 9,000 self-employed itinerant merchants.

About 1.5% of all firms in retailing had more than five employees in 1968 (PADCO, 1982, p. 167.) Because of rent control laws and the generally small parcels of space available on the market, it is likely that these proportions have remained essentially the same. Also, personal observation of many stores would tend to indicate that this is still the case, even in the main shopping districts of Cairo. Obviously, the average employment in the larger firms would be greater than five employees, and in textiles, because it is an old and large industry, probably more than 1.5% of the firms have more than five employees. Assuming that 10% of the employment is in firms with an average of eight

employees, there are approximately 325 firms with an average of eight employees and a total employment of 2,600. If the remaining persons are in firms with an average of three workers, there exist 7,800 of those small retailers in the private sector retailing industry. Thus, the industry is comprised of six firms with 4,000 employees in the public sector, 9,000 itinerant private retailers, 325 medium sized private firms with 2,600 employees, and 7,800 small private retailers with 23,400 employees.

A1.6 Estimates of Vertical Integration in the Subsector

The estimates of the extent of vertical integration are fairly heuristic. In the subsector map in Chapter 3 three areas are identified as having vertical integration: the small retailer and RMC producer in the traditional channel, the large wholesalers and weavers; and the spinning, weaving, and garment making in the public sector.

The levels of vertical integration for the public sector were determined from the Tables in this Appendix, which showed the number of firms that did both weaving and spinning. (Table A1.2.) Most of the public sector garment makers are assumed to be attached to these firms, so that there is one firm-group which is comprised of spinners (not shown on the map), weavers, anad garment makers. The wholesalers and retailers are known to be distinct firms from the producing firms, so they are separated out in the subsector map.

The inferences about the extent of vertical integration in the private sector comes from the surveys done outside the Phase II sample, which are presented in Chapter 5, in Tables 5.1 and 5.2. The small retailer and RMC producer were integrated in about one third of the interviews of

small RMC producers. This proportion is simply extrapolated to the entire subsector. Two of three large weavers were integrated with wholesalers, and it appeared to be a prevalent phenomonen. Thus half of the large wholesalers were estimated to have attached weavers. There were other examples of vertical integration found in these interviews, but they did not seem to have a compelling logic for their existence and thus were not identified as major features of the subsector.

APPENDIX 2

PRODUCT FLOWS, SALES VALUES, AND VALUE ADDED IN THE EGYPTIAN TEXTILE SUBSECTOR

In this Appendix calculations are made to estimate the volume of raw product handled and associated sales values for each firm-group in the subsector. In addition, using the production cost estimates from Appendix 3 and known mark ups in different stages, the value added in each stage is assessed. The actual calculation procedure required an iterative process, working back and forth between the financial budgets of Appendix 3 and the more aggregated flows and values presented here. Just the results are presented here and hopefully in a format that can be used to simplify this task in other situations.

Because the weight of cotton and other raw materials is essentially preserved as they move through the system, it is possible to roughly account for the disappearance and conversion of the product in each stage. This will identify the relative importance of different channels, based on the volume handled, and show how much of the product remains within or leaves the system. The system therefore "hangs together" around the volume that goes through it, and the values can be attached after the tonnage has been gauged.

Secondly, while the textile subsector is highly dependent on cotton as a raw material, there are other commodities used as well. In 1979, 23,271 metric tons (hereafter MT) of flax was produced with 10,548 MT exported. Also, 36,739 MT of jute was used, presumably for rope and

packing sacks (Federation of Egyptian Industries (hereafter FEI), 1980, pp. 145-149). These commodities are left out of further analysis because they are not related to garments.

A2.1 The Production, Exports, and Imports of Cotton, Wool and Artificial Fibers

Before looking at the main functions of interest, several equations showing the importance of the major raw materials used in the textile subsector are presented. In addition to showing the relative magnitudes, these equations give breakdowns that will be needed later.

A rough accounting of the sources and uses of wool is given for later adjustments to the product flows. The accounting equation is:

13376 MT (Locally Produced Wool Yarn; FEI, 1980, p. 151) + 4129 MT (Imports of Raw Wool Yarn; FEI, 1980, p. 149) = 2000 MT (Public Sector Carpet Manufacture; FEI, 1980, p. 151) + 3500 MT (Woolen Garments; FEI, 1980, p. 152) + 4000 MT (Woolen Blankets and Textiles; FEI, 1980, p. 151) + 4255 MT (Yarn in Blended Textiles and for Home Knitting; Derived) + 2000 MT (Yarn for Private Sector Rug Manufacture; Assumed) + 1750 MT (Losses in Conversion; Derived). (1)

Most of the figures are drawn from the FEI Yearbook and require little explanation. However, the last three figures are derived using several assumptions. First, the losses in conversion are estimated at 10% of the total wool output, which was 17,505 MT in 1979. No values were given for the yarn used in home knitting, blended fabrics, or for rug manufacture. The 4,255 MT used in home knitting and in blended fabrics was derived as the residual after counting the known categories and estimated losses. The amount of wool yarn sold to the private sector for rug manufacture is simply assumed. None of these assumptions

materially affect the picture of the subsector.

The artificial fiber consumption amounted to approximately 25,000 MT, including 10,139 MT of imported synthetics. About 9,500 MT were used to produce 71.1 million meters of silk cloth in 1979 (FEI, 1980, p. 159). The remainder, 15,500 tons, presumably went into mixed textiles.

The cotton growing, ginning, and delivery to the spinning mills can be shown with several equations. The accounting equation for the production and disappearence of cotton is as follows:

438346 MT (Production of cotton; FEI, 1980, p. 123) + 22388 MT (Imports of raw cotton; FEI, 1980, p. 128) + 65,000 MT (Carryover; NBE/EB, p. 118) = 525738 MT = 259,109 MT (Local Spinning Mills; FEI, 1980, p. 128) + 153,100 MT (Exports of Raw Cotton; NBE/EB, p. 118) + 106,150 MT (Carryover to 1980; NBE/EB, p. 118) + 7375 MT (Losses in Ginning and unallocated; derived) (2)

All figures are from government statistics, with the exception of the final figure, losses in ginning, which is the residual between total supply and demand. The carryover figures are not from a calendar year, since they were given for September 1st. However, it is better to include some estimate of the movement of stocks.

Two equations are used to specify the volume in the spinning stage. The first shows the type of output related to the tonnage of input:

259109 MT (Local Spinning Mills; Eq. 2) = 216,120 MT (Spun Yarn Output; FEI, 1980, p. 131) + 41457 MT (Losses; Werner International, p. 79) + 2190 MT (Heavy Yarn output; FEI, 1980, p. 131) + (-658 MT) (Carryover and other uses;derived) (3)

The losses are calculated as 16% of the total consumed raw cotton. The carryover is the residual. Finally, the allocation of the spun yarn output of the spinning industry is shown in the following equation:

216120 MT (Spun Yarn Output; Eq. 3) + 7 MT (Imports of Spun Yarn; FEI, 1980, p. 133) + 7812 MT (Change in Stocks; FEI, 1980, p. 133) = 179367 MT (Yarn to Local Weavers; FEI, 1980, p. 132) + 44372 MT (Exports of Spun Yarn; FEI, 1980, p. 132) + 200 MT (Adjustments; derived) (4)

A2.2 The Public Sector Spinning, Weaving, and Ready-made Clothing Production, Sales, and Value Added.

The public sector spinning, weaving, and ready-made clothing volume and value added are estimated in the following sections. They are all analyzed together because the data are related in terms of the sources and the estimation procedures used.

A2.2.1 Public Sector Spinning Sales and Value Added

In this section the main statistics for the public sector spinning function are estimated. Beyond the output figures given previously, the size of the spinning function is difficult to determine because the public sector is highly integrated and the value added and sales figures are only reported for the consolidated firms. Therefore, a more roundabout estimation procedure must be used, which consists of partitioning the aggregate value added in the public sector into its component parts.

The total value added for all functions in the public sector firms was LE 206.1 million in 1977, which had been growing at about 23% a year during the early 1970s (Central Bank of Egypt, 1980, p. 99). Assuming that value added kept growing at that rate, it reached LE 312 million in 1979.

Several pieces of information are used to partition the total value added figure into the different functions. The average prices of

cotton yarn in 1976 were around LE .75 per kilogram from public sector firms (Arthur D. Little, Inc. (hereafter ADL), 1982, p. 217). An average increase of 10% per year for three years would give a value of about LE 1.00 per kilogram or LE 1,000 per MT in 1979. (Free market prices were about LE 1.250 per kg. in 1976). With the output and price figures, it is possible to estimate the sales value of spun cotton yarn for 1979.

To calculate the value added, the profit analysis for the Mehalla Spinning and Weaving Company (given in Appendix 1, Table A1.3) is used to create a coefficient of value added as a proportion of sales for the different product lines. They are shown in Table A2.1 below:

TABLE A2.1

Value Added As a Proportion of Sales
in the Public Sector
By Function

Egypt, 1979

Function	Value Added/Sales
Spinning	47%
Cotton Weaving	44%
Ready-made Clothes	36%
Wool Yarn (carded and worsted)	21%
Wool Fabrics	57%

Source: Table A1.3, Appendix 1

These pieces of information are brought together in Table A2.2 to show the value added in spinning. The inputs from the spinning firms into the textile subsector during 1979 are listed in the left hand column of Table A2.2. The output is multiplied by the average price to get total sales. The value added is then derived using the proportion given above.

In summary, the total output of the public sector spinning firms was 254 thousand metric tons (MT), which sold for LE 310 million and generated LE 124 million in value added. Cotton is clearly the major raw material used in the subsector, although others are significant in their usage.

TABLE A2.2

Estimates of Value Added and Sales in the Public Sector Spinning Firms

Egypt, 1979

Product	Output (MT)	Price (LE/MT)	Sales (LE '000)	VA/Sales	VA (LE '000)
Cotton Yarn	216,120	1000	216,120	.47	101,576
Heavy Cotton Yarn	2,190	1000	2,190	.47	1,029
Change in Stocks	7,812	1000	7,812	.47	3,672
Wool Yarn	13,376	3000*	40,128	.21	8,427
Synthetic Yarn	14,861	3000*	44,583	.21*	9,362
TOTAL	254,359	--	310,833	--	124,066

*Assumed

Source: See Text.

Several of the figures are assumed but with little evidence for their particular values. The average price of wool and synthetic yarn was not known, but it was assumed to be more expensive than cotton yarn, so figures of LE 3,000 per MT were used. Also, the value added for artificial yarn was not known but was assumed to be closer to wool than to cotton. While wool and synthetic yarns are substantial, at 11% of output, 27% of sales, and 14% of value added, many assumptions would lead to the same picture, perhaps with the exception of the sales values.

A2.2.2 Public Sector Weaving and RMC Statistics

The other major functions performed in the public sector are weaving and ready-made clothing. The sales of RMC products were LE 23 million in 1979 from an output of 2,542 MT, while the printing and dyeing output was around LE 20 million in 1980 (FEI, 1980, p. 165; ADL, 1982, p. III-13). Using the value added proportion for RMC products in Table A2.1 yields about LE 8.3 million of value added for that function, while an arbitrary value added proportion of 40% yields about LE 8 million in value added for printing and dyeing. The spinning, RMC, and printing and dyeing functions each have about LE 124, LE 8.3, and LE 8 million of value added, leaving weaving with LE 171.7 million to account for the total value added of LE 312 million in the public sector. Using the value added conversion factor for weaving yields total sales of nearly LE 390 million for weaving.

The combined sales of 26 public sector companies was LE 323 million in 1973 (Werner International (hereafter WI), 1976, p. 37). During the 1970s the output increases for all textile companies was about 16% a year (ADL, 1982, p. III-13). This would imply sales of LE 786 million for 1979, which is fairly close to the separate estimate made here of LE 743 million. The latter estimate is based on LE 23 million in RMC products, LE 20 million in printing and dyeing, LE 310 million in spinning, and LE 390 million in weaving.

A2.3 Inputs and Outputs of the Weaving Function.

The yarn manufactured in the public sector firms is converted into a variety of textile materials, mostly fabric for clothing. The total

inputs and outputs of the domestic weaving industries are shown in Table A2.3, which shows the yarn used for inputs by type of fiber, and the various products sold as output. The inputs to the weaving industry are mainly locally produced cotton, wool and synthetic fibers, but they also include some imports.

For simplicity it is assumed all synthetic and wool yarn is consumed in the public sector, although private firms also produce blended fabrics and synthetics. The mixing of yarn types is accounted for in the value of the output of each sector, which assume implicitly that both sectors use the same proportions of different yarns.

Several categories of outputs do not go to the other stages in the subsector and are excluded. For wool, blankets and carpets go through a different system, and thus are excluded. Also, the losses in conversion and ending stocks in all categories never go any farther than the weaving stage, and are not considered further.

Two categories temporarily leave the system to reappear later. The woollen garments are transferred from weavers directly to public RMC firms, and knitted fabrics are transferred to retailers since the budgets for private knitters were not computed. The remaining outputs are combined to determine the total value of and product flow from weavers to other stages.

The total weaving output excluding the above items was 121,900 MT in the public sector, including 9,388 MT of knitted fabrics. Private weavers produced 49,007 MT of woven cloth. The total sales of the public sector was LE 390 million, while the private sector sold LE 166 million. Thus, the average sales price per kilogram was LE 3.19 in the public sector, and LE 3.39 in the private sector. Using the average weight of a meter of cloth, 133 grams, the public sector price per meter was LE .42,

TABLE A2.3

Input and Output Quantities from the Public and Private Sector Weaving Firms

By Product Type

Egypt, 1979

(Metric Tons)

Product Type	Public Sector	Private Sector
Inputs:		
Wool Yarn	13376	
Imported Wool Yarn	4129	
Synthetic Fibers	14861	
Imported Synthetic Fibers	10139	
Cotton Yarn	111269	68098
Total Inputs	153774	68098
Outputs:		
Wool Carpets and Blankets	4000*	
Wool Textiles	2000	
Wool Garments	3500+	
Wool Yarn for Rugs and Knitting in the Private Sector	2000+	
Wool Yarn in Blended Textiles	4255	
Losses in Wool Conversion	1750*	
Synthetic Yarn in Blends	14090	
Synthetic Textiles	9500	
Losses in Synthetic Conversion	1410*	
Cotton Textiles	82667	49007
Other Cotton Textiles	3500*	
Knit Cotton Textiles	9388+	14192+
Carryout	9660*	
Cotton Losses in Conversion	6054*	4899*
Total Outputs:	153774	68098

*Specified quantity leaves the system
+See Text

Source: Federation of Egyptian Industries Yearbook, 1980

while prices in the private sector were LE .45 per meter.

These prices make sense, given that 46,463 MT of the production of cloth was rationed cloth in 1979, which sold for LE .20 or less. Another third of the cloth is semi-popular cloth, which sells from LE .40 -.60 per meter. Since the public sector probably produces a larger proportion of the popular cloth, that average price might be somewhat lower.

A2.4 Constructing Subsector Flows for Weaving, Wholesaling, RMC Production, and Retailing Functions.

This section describes the aggregate quantities and sales going from the public and private weavers to the wholesalers, RMC producers and retailers. The total cloth output is given in the first line of Table A2.4. The knitting output is included in the public sector figures because it was in the total sales estimates, but it is left out of the private sector weaving figures. The next lines disaggregate the weaving output among the subsequent functions, including exports. These include the fabric sold to knit and woven ready-made clothing firms (designated KRMC and WRMC respectively), to wholesalers and retailers who sell piece goods, and to exports. The main sales values in both sectors come from the sale of piece goods, at 81% of total in the public sector, and 59% in the private sector.

The export, WRMC, and KRMC quantities are from the FEI Yearbook. The exports of the public sector were assumed to be 65% of total exports, leaving the private sector 35%. This ratio is based on the assumption that exports are in the same proportion as shares of production (ADL, 1982, p. A-3). All cloth going from the public to the private sector went through the public sector wholesalers, who handled 45,480 MT, or

35.5% of all fabric (WI, 1976, p. 40). The fabric delivered to the public sector retailers was the residual of the total output of the public sector after exports, deliveries to private firms, and KRMC and WRMC requirements are deducted.

Table A2.5 shows the wholesaling transactions. The public wholesalers purchased all of their cloth from public weavers, and that volume was given in Table A2.4. The private wholesalers buy from either public wholesalers or private weavers. The volume of fabric handled by private wholesalers was 6.4% of all fabric going through that stage, or 8,199 MT. The total in Table A2.5 is increased to 12,898 MT to reflect the transfer of product from the public to the private sector. The estimates of how much private wholesalers purchased from different sources are simply guesses.

Most small garment producers probably purchase their cloth through wholesalers, and about half of the medium firms might also. Thus 3,500 MT go from both wholesaler firm-groups to these smaller firms. Finally, the amount to private retailers is the residual.

The values for the input costs to wholesalers are from Table A2.4, which gives the weaving statistics. Most output values are found by taking the proportion of the total quantities going to a particular firm-group and multiplying it by the total value. The input cost is then multiplied by 1.06 to reflect the wholesaler's mark up and to give the output values.

The cloth going to private wholesalers from the public sector is transferred at cost to the private wholesalers, which is reflected in the value LE 14.8 million for both entries. The mark up is therefore assumed to be captured wholly by the private sector.

TABLE A2.4

Sources of Inputs and Destination of Outputs
in the Public and Private Weaving Firms

Egypt, 1979

Source/Destination	Public Sector (MT)	Public Sector (LE Mill.)	Private Sector (MT)	Private Sector (LE Mill.)
Sources of Inputs:				
All Weaving+	121,900	383.0	49,007	166.0
Total Inputs	121,900	383.0	49,007	166.0
Destination of Output:				
Exports	10,873	34.2	5,855	19.8
Fabric	99,097	311.3	29,015	96.6
(Public Wholesalers)	(45,450)	(142.9)		
(Private Wholesalers)			(8,199)	(27.3)
(Public Retailers)	(53,617)	(168.4)	(9,935)	(33.1)
(Private Retailers)			(10,881)	(36.2)
Public WRMC	2,542	8.0		
Private WRMC			14,637	49.6
Public KRMC	9,388	29.5		
Total Outputs	121,900	383.0	49,007	166.0

+ See Table A2.3 for the disaggregation of this category

Source: Compiled by the Author

TABLE A2.5

Sources of Inputs and Destination of Outputs
in the Public and Private Wholesaling Firms

Egypt, 1979

Source/Destination	Public Sector (MT)	Public Sector (LE Mill.)	Private Sector (MT)	Private Sector (LE Mill.)
Sources of Inputs:				
Public Weavers	45,480	142.9		
Private Weavers			8,199	27.3
Public Wholesalers			4,699	14.8
Total Inputs	45,480	142.9	12,898	42.1
Destination of Output:				
Private Wholesalers	4,699	14.8		
Private WRMC	1,000	3.3	2,500	8.7
Public Retailers	39,781	132.5		
Private Retailers			10,398	36.0
Total Outputs	45,480	150.6	12,898	44.6

Source: Compiled by the Author

Next, as shown in Table A2.6, the cloth goes either directly to the retailer or is converted to clothing in RMC firms. All input quantities and values are taken from the previous tables, except for the 3,500 MT going from public weavers to public WRMC producers (FEI, 1980, p. 165). The sales value of LE 23 million was supposedly based on the 2,542 MT sold by the public WRMC firms, but the estimated input values could not support those sales, given the value added to sales proportion in Table A2.1. Therefore, the quantity of wool garments from Table A2.3, 3,500 MT, was added in to this category at a cost that is "reasonable" given the known sales values. The output values for the private sector were taken from the budgets in Appendix 3.

The last function in this sequence is retailing cloth and clothing, which is shown in Table A2.7. All of the input values are from the earlier tables. For the output and sales values, the Werner report estimated that 51% of all fabric went through public sector retailers and 49% went through private retailers (WI, 1976, p. 40). The values associated with these quantities were determined by using the allowable mark up for cloth retailing. If the cloth came directly from the weaver, the retailer could mark up the value by 25%; he could only add 19% to the cost if it came from a wholesaler to allow for the wholesaler's mark up of 6%.

The WRMC and KRMC quantities sold by retailers were estimated using the same proportions that were used for fabric, so that 51% of all RMC products went through public retailers and 49% went through the private sector. It is assumed that all RMC products produced by the public sector remained within it and that the private sector made up the difference between the public sector retailing requirements and public sector RMC production.

TABLE A2.6

Sources of Inputs and Destination of Outputs
in the Public and Private Garment Firms

Egypt, 1979

Source/Destination	Public Sector (MT)	Public Sector (LE Mill.)	Private Sector (MT)	Private Sector (LE Mill.)
Sources of Inputs:				
Public Weavers	3,500	8.1		
Private Weavers			14,637	49.6
Public Wholesalers	2,542	8.0	1,000	3.3
Private Wholesalers			2,500	8.6
Total Inputs	6,042	16.1	18,137	61.5
Destination of Output:				
Public Retailers	6,042	23.0	8,004	54.9
Private Retailers			10,133	69.5
Total Outputs	6,042	23.0	18,137	124.4

Source: Compiled by the Author

TABLE A2.7

Sources of Inputs and Destination of Outputs
in the Public and Private Retailing Firms

Egypt, 1979

Source/Destination	Public Sector (MT)	Public Sector (LE Mill.)	Private Sector (MT)	Private Sector (LE Mill.)
Sources of Inputs for Retailers:				
Public Weavers	53,617	168.4		
Private Weavers	9,935	33.1	10,881	36.2
Public Wholesalers			39,781	132.5
Private Wholesalers			10,398	36.0
Public WRMC	6,042	23.0		
Private WRMC	8,004	54.9	10,133	69.5
Public KRMC	9,388	35.8		
Private KRMC	2,037	7.8	10,976	41.8
Total Inputs	89,023	323.0	82,169	315.6
Destination of Output:				
From Retailers				
Fabric Sales	60,374	235.0	58,007	234.7
WRMC Sales	14,046	101.3	10,133	90.4
KRMC Sales	11,425	56.7	10,976	54.4
Losses	3,178	0.0	3,053	0.0
Total Outputs	89,023	393.0	82,169	379.5

Source: Compiled by the Author

Using an often-mentioned mark up, the sales values of WRMC products for private sector retailers were calculated with a 30% mark up above their costs. While this may be more valid for shirts and dresses than for suits, it does go along with the idea that the "average" product is a shirt or blouse, as indicated in Appendix 3.

Since there were no value added figures available for the KRMC products, that quantity was multiplied by the average price of a metric ton of woven goods from the public and private weavers, LE 3,170, to give the input costs. Then 20% was added to cover making up costs, and another 30% was added to cover retailing costs and profits.

The overall markup was 21.7% and 20.25% for the public and private sectors. These figures are affected substantially by the inclusion of the popular supply cloth in the fabric mark ups. There were 46,643 MT of cloth produced under that program in 1979. If the Cairo figures are representative of the entire country, the public sector handled 55% or 25,839 MT of the cloth, while the private sector distributed 45%, or 20,804 MT (FEI, 1980, p.140; Trade Chamber, 1982, p. 3)). A 4% markup allowed was allowed on these quantities, so the average markups for the firms were reduced from 26.9% in the public sector and 23.6% in the private sector because of this program.

A2.5 Output, Sales, and Value Added in the Tailoring and Dressmaking Industries.

The estimates of the quantity of cloth used, the sales, and the value added figures for tailors and dressmakers were taken from the MSU Rural Non-Farm Employment project data and then estimated for the whole Egyptian population. The results of this exercise are given in Table

A2.8, which gives the quantities sold, and Table A2.9, which gives the sales and value added figures. The figures are disaggregated by rural and urban producers as well as by tailors and dressmakers because it is clear that there are distinctive features about each group.

The procedure used for Table A2.8 is essentially as follows. From the Phase I survey, the number of rural and urban firms was estimated for the Kalyubiya governorate. Using that data, the number of firms per million inhabitants was derived both for rural and urban populations. In 1979, there were about 41 million people in Egypt, with 55% in rural areas and 45% in urban areas. Thus, there were about 18.3 million urban and 22.7 million rural inhabitants. The number of firms could then be estimated for the entire country, assuming that the coefficients from Kalyubiya are representative of the entire population. This seems valid because two quite different areas were sampled in the Phase I and Phase II surveys, Kalyubiya and Fayoum governorates, and most of the figures were remarkably similar. The data for Kalyubiya is used because it is better known to this researcher.

A range of estimates is given for the number of urban producers, reflecting a concern about how well the urban areas were surveyed. As mentioned in Appendix I, one town, Tukh, appeared to be estimated more accurately because of the familiarity that enumerators had with it. Thus, using the higher figures for tailors and dressmakers in Tukh seems to be better than using the average of all urban areas surveyed in Kalyubiya. Also, even with the higher figures used, the proportion of textiles used by tailors and dressmakers seemed remarkably low. (See Chapter 4). The higher figures are used in the main body of the text, but both estimates are given here.

TABLE A2.8

Total Tailoring and Dressmaking Firms and Meters of Cloth Used

By Rural and Urban Locations

Egypt, 1982

Number of Urban Firms and Meters Used

	Firms/ Mill. Pop.	Meters/ Firm	Meters/ Mill. Pop.	Meters Used in Egypt[1]	Firms in Egypt[1]
Low Estimate:					
Tailors	1,460	1,401	2,045,460	37,431,918	26,718
Dressmk.	894	1,099	982,506	17,979,860	16,360
Total	x	x	x	55,411,778	43,078
High Estimate:					
Tailors	1,460	2,018	2,946,280	53,916,924	26,718
Dressmk.	894	1,616	1,444,704	26,438,083	16,360
Total	x	x	x	80,355,007	43,078
High-Tukh Estimate:					
Tailors	3,068	2,018	6,191,224	113,299,399	56,144
Dressmk.	2,843	1,616	4,594,288	84,075,470	52,027
Total	x	x	x	197,374,869	108,171

Number of Rural Firms and Meters Used

	Firms/ Mill. Pop.	Meters/ Firm	Meters/ Mill. Pop.	Meters Used in Egypt[2]	Firms in Egypt[2]
Low Estimate:					
Tailors	1,290	1,261	1,626,690	36,925,863	24,283
Dressmk.	2,593	1,258	3,261,994	74,047,264	58,861
Total	x	x	x	110,973,127	88,144
High Estimate:					
Tailors	1,290	1,773	2,287,170	51,918,759	29,283
Dressmk.	2,593	1,786	4,631,098	105,125,925	58,861
Total	x	x	x	157,044,684	88,144

[1]Based on 18.3 million urban inhabitants
[2]Based on 22.7 million rural inhabitants

Source: Compiled by the Author

TABLE A2.9

Estimated Sales and Value Added for the Tailoring and Dressmaking Industries

By Rural and Urban Locations

Egypt, 1982

Urban Firms, Sales, and Value Added

	Firms/ Mill. Pop (#)	Sales/ Firm (LE)	VA/ Firm (LE)	Sales in Egypt (LE MM)	VA in Egypt (LE MM)	Firms in Egypt (#)
Average Estimate:						
Tailors	1,460	2,147	1,855	57.4	49.6	26,718
Dressmk.	894	912	820	14.9	13.4	16,360
Total	x	x	x	72.3	63.0	43,078
High Estimate:						
Tailors	3,068	2,147	1,855	120.5	104.1	56,144
Dressmk.	2,843	912	820	47.4	42.7	52,027
Total	x	x	x	167.9	146.8	108,171

Rural Firms, Sales, and Value Added

	Firms/ Mill. Pop. (#)	Sales/ Firm (LE)	VA/ Firm (LE)	Sales in Egypt (MM LE)	VA in Egypt (MM LE)	Firms in Egypt (#)
Tailors	1,290	889	646	26.0	18.9	29,283
Dressmk.	2,593	375	278	22.1	16.4	58,861
Total	x	x	x	48.1	35.3	88,144

Source: Compiled by the Author

TABLE A2.10

Meters of Cloth Used by Sampled Tailors,
Average and High Estimates

By Product Type, Rural and Urban Locations

Egypt, 1982

Average Estimate

	Rural[1]			Urban[2]		
Product	Number of Pieces	Meters/ Piece	Meters/ Product	Number of Pieces	Meters/ Piece	Meters/ Product
Farmer's Gel.	1,161	3.5	4,064	343	3.0	1,029
Gel. Afrangi	2,000	3.5	7,000	1,214	3.0	3,642
Vests	2,108	1.5	3,162	656	1.5	984
Shirts	39	2.5	98	857	1.5	1,286
Pants	48	2.3	110	4,597	2.0	9,194
Summer Suits	5	4.0	20	800	4.0	3,200
Winter Suits	-	-	-	255	4.5	1,148
Pajamas	66	2.8	185	540	3.8	2,052
Expensive Gel.	142	3.5	497	284	4.5	1,278
Total Meters	x	x	15,136			23,813

High Estimate

	Rural[1]			Urban[2]		
Product	Number of Pieces	Meters/ Piece	Meters/ Product	Number of Pieces	Meters/ Piece	Meters/ Product
Farmer's Gel.	1,161	5.0	5,805	343	5.0	1,715
Gel. Afrangi	2,000	5.0	10,000	1,214	5.0	6,070
Vests	2,108	2.0	4,216	656	2.0	1,312
Shirts	39	3.0	117	857	3.0	2,571
Pants	48	3.0	144	4,597	3.0	13,791
Summer Suits	5	5.0	25	800	5.0	4,000
Winter Suits	-	-	-	255	5.0	1,275
Pajamas	66	4.0	264	540	4.0	2,160
Expensive Gel.	142	5.0	710	255	5.0	1,420
Total Meters	x	x	21,281			34,314

[1]Based on a sample of 12 Tailors [2]Based on a sample of 17 Tailors

Source: Compiled by the Author

TABLE A2.11

Meters of Cloth Used by Sampled Dressmakers, Average and High Estimates

By Product Type, Rural and Urban Locations

Egypt, 1982

Average Estimate

	Rural[1]			Urban[2]		
Product	Number of Pieces	Meters/ Piece	Meters/ Product	Number of Pieces	Meters/ Piece	Meters/ Product
Gelebeas	4,814	3.35	16,127	744	3.0	2,232
Dresses	1,462	2.3	3,363	489	2.3	1,125
Blouses	142	2.0	284	459	2.0	918
Skirts	176	2.3	405	362	2.3	833
Underwear	2,568	1.5	3,852	640	1.5	960
School Clothes	484	1.5	726	126	1.5	189
Coats/Suits	30	3.5	105	5	3.5	18
Pajamas	804	3.5	2,814	106	3.0	318
Total Meters	x	x	27,675			6,593

High Estimate

	Rural[1]			Urban[2]		
Product	Number of Pieces	Meters/ Piece	Meters/ Product	Number of Pieces	Meters/ Piece	Meters/ Product
Gelebeas	4,814	5.0	24,070	744	5.0	3,720
Dresses	1,462	3.0	4,386	489	3.0	1,467
Blouses	142	3.0	426	459	3.0	1,377
Skirts	176	3.0	528	362	3.0	1,086
Underwear	2,568	2.0	5,316	640	2.0	1,280
School Clothes	484	2.5	1,210	126	2.5	315
Coats/Suits	30	5.0	150	5	5.0	25
Pajamas	804	4.0	3,216	106	4.0	424
Total Meters	x	x	39,302			9,694

[1]Based on a sample of 22 Dressmakers
[2] Based on a sample of 6 Dressmakers

Source: Compiled by the Author

The quantity figures were collected as pieces of clothing in the Phase II survey, rather than as meters or tons, so a conversion procedure was needed. In a special questionnaire the tailors and dressmakers were asked to give the cloth they used to produce different items. The number of pieces produced, as given in Tables 4.2 and 4.3, is reproduced in Tables A2.10 and A2.11 with the estimates of the amount of cloth required from that questionnaire. These figures seemed somewhat low in view of the personal experience of this researcher, perhaps because the questionnaire reflects the cloth in the product rather than the amount the customer had to bring to be tailored. Thus, a larger coefficient is given to most products, and a higher estimate of the quantity used per firm is then reported. Even with this change, it still does not contradict the basic conclusion that, for whatever reasons, many consumers seem to be buying textile piece goods but are not taking them to tailors or dressmakers.

ESTIMATION OF THE FINANCIAL BUDGETS FOR PRIVATE SECTOR FIRMS IN THE SUBSECTOR

This Appendix gives the methods of calculation and sources of data for the financial budgets presented in Chapter 4. The budgets are presented for each stage, beginning with weaving and ending with cloth and clothing retailing. In each section, an attempt is first made to reconcile the estimated production of a particular firm-group with the industry capacity in that stage. Then financial budgets are developed to show the proportions of different costs and the net profit for representative firms in each firm-group.

The estimates in this Appendix are frankly synthetic, and are derived from a variety of sources including economic-engineering studies, statistical surveys, and information from from the subsector interviews (See Chapters 2 and 5.) The reported values represent a judgment about what makes sense given somewhat conflicting evidence. In most cases the process of judgment will be spelled out so readers can determine where to make sensitivity analyses regarding various cost items.

These budgets are created to estimate the orders of magnitude for the value added and profit in different firm-groups, and to see where the important sources of income and potential centers of growth lie. Thus, the reported budgets may not be in the level of detail that is desired by some readers, but the information appears adequate for the purposes at hand. The cases where it is not will be noted.

Budgets for the public sector are not created in this appendix. However, the general tendencies and the size and the influence of the public sector can be estimated fairly well from the calculations made in Appendix 2.

The presentations below follow a systematic format because many assumptions required in one budget apply to another. Therefore, the weaving budgets are given in the most detail, and are referenced in the other budgets when necessary.

A3.1 Financial Budgets for the Weaving Industry

The aggregate output of the weaving industry is first discussed to show the procedure for determining the output per firm, and then each of the sales and costs categories is discussed in detail.

Output Figures. The domestic Egyptian weaving industries produced 1.003 billion meters of cloth during 1979. The private sector made 383 million meters of the total production while the public sector produced 620 million meters (Federation of Egyptian Industries (hereafter FEI), 1980, p. 138.) This production was done using 36,860 mechanical looms and 14,800 hand looms. (FEI, 1980, p. 141; Werner International, 1976, p. 23.) All of the hand looms, and 13,800 power looms were in the private sector. The hand looms can produce about 1.5 meters of cloth per hour and might work 3,000 hours a year (10 hours per day for six days a week for fifty weeks a year) (ILO, 1983, p.59.) The 65 million meters per year produced by the hand loom firm-group is about 6.5% of the cloth woven in the domestic firms, and is excluded from the total of the private sector. Thus, 318 million meters are produced by 13,800 mechanical looms, or about 23,000 meters per year per loom.

The budgets take this figure as the starting point for production per loom. Given the number of looms per firm estimated in Appendix 1, the production of a representative firm in each of the categories -- small, medium and large weaving firms in the private sector -- can be estimated.

The production figure used is 22,000 meters per year per loom to calculate the average production figure for the small firm. Assuming some economies of size exist, and that larger firms work longer hours, the medium and large firms are assumed to produce 25,000 meters per year on each loom.

The output of a loom is the product of the speed of the loom (picks per minute, or ppm), and the number of threads that are in each centimeter of cloth (picks per cm.) This will give the output for some specified time period. The output of the loom over a longer period will depend on the time the loom is operated, the width of the cloth being woven, and also the time lost due to breaks in the yarn, mechanical failures or changes in the yarn in the warp or weft.

Table A3.1 shows a variety of yearly output figures for looms based on several different speeds, yearly hours operated, and the number of threads required per centimeter of cloth. It is clear that the range of output is highly dependent on which of these configurations actually exists, and therefore one of the difficulties in estimating output for the entire industry is that the exact values for the machines need to be known.

Nonetheless, some estimations seem better than others. First, most looms in Egypt use shuttles, and so operate at lower speeds. However, most of the cloth produced in Egypt is of a narrow width, 90 centimeters, so that the picks per minute are faster because the

TABLE A3.1

Output of a Mechanical Loom with Varying Speeds, Weft Yarns, and Hours Worked Per Year

(Meters Produced Per Year)

Threads Per Cm.	Loom Speed (ppm)	Hours Worked Per Year 3,000	4,500
25	190	13,680	20,520
25	210	15,120	22,680
25	240	17,280	25,920
36	190	9,500	14,250
36	210	10,500	15,750
36	240	12,000	18,000

Source: Calculated by the Author

shuttle does not travel as far and more meters per hour can be woven. Secondly, because of the large proportion of cloth which is the coarse, inexpensive rationed cloth, it is likely that the average number of picks per centimeter for the entire cloth production in Egypt is nearer 25 than 36. Thus, coarse cloth and narrow widths mean that 23,000 - 25,000 meters might be achieved in many firms.

The assumed number of meters produced per year for the medium and large firms is 25,000. In addition to the characteristics of the cloth several other factors make this assumption of high output reasonable. First, it is possible to achieve the relatively high level of output if long hours are worked, which is included in the budgets by adding extra labor. Also, there may be more looms in the system than are officially registered, so what appears to be high productivity may be in fact more machines at work. This possibility is also included since about 1,000 looms are added to the estimated capacity in the private sector.

The financial budgets are presented in Tables A3.2 - A3.4. Each of the Tables spells out in detail the calculations used to estimate each category of costs. The assumptions made are also discussed.

Sales. To estimate total sales for the firms, it is necessary to multiply the output per loom by the number of looms and then attach a price to each unit produced. The average number of looms was determined in Appendix 1.

The average price is the weighted average price determined in Appendix 2 -- LE .45 per meter. This price was in fact determined by an iterative process between constructing these budgets and making the aggregate sales values "fit" with the public sector estimates and profitable operations in other stage.

TABLE A3.2

Financial Budgets for Small Weaving Firms
Egypt, 1979

(Egyptian Pounds)

Category and Description of Sales or Costs	Value
(1) SALES (LE .45 x 22,000 meters x 2 looms)	19,800
(2) INTERMEDIATES: Yarn (5852 kg. x 1.10 x LE 1.60/kg)	10,299
Other Raw Materials (7% x LE 19,800)	1,386
(3) WAGES (2 looms x 3 workers x LE 50 x 12 months)	3,600
(4) UTILITIES (30 sq. meters x LE .5 x 12 months)	180
(5) INTEREST (LE 11,685/12 x .75 mths x 10% per annum)	73
(6) CAPITAL FLOW COST (Calculated in Table A3.6)	1,287
(7) NET PROFIT BEFORE TAXES	2,975
(8) TAXES (9% of Line (7))	268
(9) NET PROFIT (Line (7) - Line (8))	2,707
(10) VALUE ADDED (Line (1) - Line (2))	8,115

Source: Compiled by the Author

TABLE A3.3

Financial Budgets for Medium Weaving Firms
Egypt, 1979

(Egyptian Pounds)

Category and Description of Sales or Costs	Value
(1) SALES (LE .45 x 25,000 meters x 26 looms)	292,500
(2) INTERMEDIATES: Yarn (86450 kg. x 1.1 x LE 1.50/kg)	142,643
Other Raw Materials (10% x LE 292,500)	29,250
(3) WAGES (26 looms x 3 workers x LE 50 x 12 months)	46,800
(4) UTILITIES (442 sq. meters x LE .5 x 12 months)	2,652
(5) INTEREST (LE 171,893/12 x 1.0 mths x 10% per annum)	1,432
(6) CAPITAL FLOW COST (Calculated in Table A3.6)	33,188
(7) NET PROFIT BEFORE TAXES	36,535
(8) TAXES (32% of Line (7))	11,691
(9) NET PROFIT (Line (7) - Line (8))	24,844
(10) VALUE ADDED (Line (1) - Line (2))	120,607

Source: Compiled by the Author

The average price per meter of LE .45 was used for all sizes of firms without regard to their channel. There is reason to believe that firms who produce for RMC production are able to get higher prices, but this is not taken into account.

Intermediates. The cost of intermediate inputs, primarily yarn, was estimated by multiplying the output quantity in tons (assuming an average of 133 grams per meter) by 110% to reflect losses in production, and then by an average price. The losses may be slightly high, but are used to keep the cost of intermediates within the range of several empirical studies done for Egyptian firms. The rationale behind the price of LE 1.60/kg is similar, to make the cost of intermediates "normal." It is also consistent with the prices assumed for the public sector spinning output -- LE 1.00/kg for cotton yarn, and LE 3.00 for synthetics -- and the fact that most of the yarn output is cotton.

The ten percent added as the costs of "Other Raw Materials" was taken from the Mehalla profit analysis in Appendix 1. That estimate included items such as spare parts, so the estimates here may also include some raw materials besides intermediates. Because the small firms did not have pirning and winding equipment, that category was reduced to 7% for them.

There were three empirical studies used as references for the costs of intermediate inputs -- an unpublished World Bank study, an Institute of National Planning (hereafter INP) survey of 118 firms, and a study of small scale industry by Checci Co. (World Bank, 1983b; INP, 1981; Checci, 1982.) The INP study only provided summary estimates for five size categories, and all firms had less than fifty employees. In the first two studies, the cost of intermediates ranged from 56% to 90% of sales, with no obvious determining relationship. The Checci study

estimated that intermediates for the small textile processors was around 58%. These processors were mostly weavers, but also probably included printers and dyers. If most firms in that study were weavers, as is likely, this is a meaningful figure.

The profit analysis of Mehalla Kubra Company in Appendix 1 indicated that intermediates were 56% and 57% of sales for cotton and wool weaving. It appeared that the firms in the World Bank and INP studies gave low wage figures, so that the proportion of intermediates would naturally be higher. For this reason, the intermediates were estimated at the low end of the spectrum, at 60% of sales.

Wages. The wage percentages from the INP and World Bank studies were about 6-10% of the sales values, but these figures seemed low. The average wages in the INP study were about LE 30-40 per month for all size categories, which was consistent with the average wages in the industrial sector during 1979. However, two firms gave their total costs for wages during the subsector interviews, which indicated average wages around LE 80-100 per month. Since the interview figures were from 1983, part of the difference is likely to be due to wage inflation during those years, which was substantial (National Bank of Egypt, 1982, p. 6/4/c.) In addition the results of the Checci study indicated that small firms often paid about LE 2.00 per day (about LE 50 per month) in 1982 (Checci, 1982, p. 45.) For these reasons, a middle figure of LE 50 per month was used as an average for all employees.

The number of hired workers was three persons per loom, which included indirect labor. While the estimate for the public sector was 3.7 workers per loom, this seemed somewhat high for the private sector. One relatively large firm that was interviewed had about 4 persons per loom, but technical manuals and books discussing the weaving trade seem

TABLE A3.4

Financial Budgets for Large Weaving Firms
Egypt, 1979

(Egyptian Pounds)

Category and Description of Sales or Costs	Value
(1) SALES (LE .45 x 25,000 meters x 125 looms)	1,406,250
(2) INTERMED.: Yarn (415625 kg. x 1.1 x LE 1.50/kg)	685,781
Other Raw Materials (10% x LE 1,406,250)	140,625
(3) WAGES (125 looms x 3 workers x LE 50 x 12 months)	225,000
(4) UTILITIES (2277 sq. meters x LE .5 x 12 months)	13,662
(5) INTEREST (LE 826,406/12 x 1.5 mths x 10% per annum)	10,330
(6) CAPITAL FLOW COST (Calculated in Table A3.6)	132,872
(7) NET PROFIT BEFORE TAXES	197,980
(8) TAXES (9% of Line (7))	63,354
(9) NET PROFIT (Line (7) - Line (8))	134,626
(10) VALUE ADDED (Line (1) - Line (2))	579,884

Source: Compiled by the Author

to indicate that firms can have around two persons per loom. Thus, on average, another middle figure, three persons per loom, is used. The use of this figure also implies some multiple shifts.

Utilities. Utilities were simply estimated based on the space of the factory, using LE .50 per square meter per year as the rate. This is in rough accord with the responses in the MSU survey, and while low, many of the electric and water costs are subsidized in Egypt. Also, the empirical studies examined showed low utility costs. Few changes in these assumptions would make much of a difference.

Interest. The interest charges are related to the cost of working capital. (The interest on fixed assets is included below in the calculations of flow costs for fixed assets.) This category is somewhat of a hybrid between economic and financial analysis, and represents an opportunity cost of holding inventories as working stocks. One firm mentioned that they had a month's worth of stocks on hand. It is assumed the stocks of raw materials increase with the size of firm, mainly because purchasing larger amounts may require special orders and longer lead times, so larger firms will have to purchase earlier and hold stocks longer. Also, the consequences of not having enough yarn are more costly for the larger firms. In these estimates small firms hold three weeks of the total raw materials costs for the year on hand, medium firms have a month on hand, and large firms hold six weeks of inventory. This figure may also include some finished goods, but they are not considered independently. Ten percent is the assumed opportunity cost of capital.

Capital Costs. The replacement costs of capital equipment rather than historical costs are used in this category, so this presentation is also somewhat of a hybrid between economic and financial analysis. The fixed investment for the weaving budgets are presented in Tables A3.5 and

A3.6, in which estimates are made for the capital requirements based on the ILO Technical Memorandum, Small Scale Weaving (ILO, 1983.) The derived flow costs effectively include some interest and depreciation payments, so they are not included separately in the budgets.

The specific capital requirements are outlined in Table A3.5, which shows the number of different machines and space requirements for each firm-group. These were constructed by beginning with the number of looms determined in Appendix 1, and then deriving the other requirements from the ILO study, which carefully outlines the specifications for different weaving options. (See Chapter 4 for the different functions that are provided by each of these machines.)

For the medium and large firms, these calculations assume that some firms are beginning to adopt the more expensive shuttleless looms, so 10% of the looms are valued at those higher prices. (This may be somewhat high, so the capital costs will be slightly overstated.) Also, the warping and sizing equipment required by the medium firms is estimated to be on average less than one set. This implicitly assumes some sub-contracting exists, with some firms owning the equipment and providing services to others, so in the aggregate there is less than one set of this equipment per firm. Finally, a somewhat arbitrary estimate is made for the space for offices and storage, which is based on observations by the author and discussions with technical specialists at Colorado State University.

The costs of all equipment and the derived flow costs for each type of firm are given in Table A3.6. The space needed for land and buildings is given first, with costs attached. The costs are based on a study of the land and building costs of urban and rural housing in 1980 (El Sokari, 1982.)

TABLE A3.5

Machinery and Space Requirements
for Private Weaving Firms
(Egypt, 1979)

Equipment:	Firm Size Small	Medium	Large
Looms:			
Number Required	2	24	113
Cost/Machine (LE)	3,000	3,000	29,015
Number Required	0	2	12
Cost/Machine (LE)	x	25,000	25,000
Total Cost (LE)	6,000	122,000	639,000
Space Required (m^2)	19	250	1,200
Warping and Sizing Equipment:			
Number Required (Sets*)	x	.37	1.0
Cost/Set (LE)	x	98,000	98,000
Total Cost (LE)	x	36,260	98,000
Space Required (m^2)	x	189	510
Pirn Winding Equipment:			
Number Required	x	9	36
Cost/Set (LE)	x	1,000	1,000
Total Cost (LE)	x	9,000	36,000
Space Required (m^2)	x	9	34
Looming, Inspection, Offices, Storage:			
Cost of Equipment (LE)	x	13,000	35,000
Space Required (m^2)	10	305	531
(Offices Storage)	(10)	(150)	(250)
Total Equipment Cost (LE)	6,000	180,260	808,000
Total Space Required	29	753	2,277

Source: Compiled by the Author from ILO, 1983

The costs used assume that most construction would be in lower class areas and of medium construction quality. (The values for high cost urban real estate were also estimated, and those figures are used in the retailing budgets to indicate the expense of being in a central location.)

The flow costs are determined using the standard capital recovery factor, given below:

$$F = rV/(1 - (1/(1+r)^n)$$

where:

F = the flow cost of capital (LE/year)
V = the value of the asset (LE)
r = the opportunity cost of capital (proportion)
n = the useful life of the asset (years)

The useful life of land is infinite, so the denominator is 1 for land, since the second term in the denominator approaches zero as n goes to infinity. The flow cost then represents the stream of income in perpetuity that is required to equal the net present value of the asset (land.) When the asset life is less than infinite, an increase in the flow is necessary to pay for the capital in a finite time period. These adjustments are made for buildings and machinery by using denominators of .991 and .851 to reflect useful lives of fifty and twenty years respectively. These flows recover the value of the asset and a return to capital as well, so depreciation and the opportunity cost of the investment are both included in this figure.

Taxes. The tax rates are taken from an analysis of the taxation system in Egypt given in the Economic Bulletin of the National Bank of Egypt (National Bank of Egypt, 1984, pp. 9-44.) The tax rate for individual income of LE 3,000-4,000 was 9%. It is assumed that the small

TABLE A3.6

Fixed Assets, Working Capital Values and Flow Costs
for Private Weaving Firms
(Egypt, 1979)

Type of Asset	.....Firm Size..... Small	Medium	Large
Land (m^2)	29	442	1,500
Land Value (LE 100/m^2)	2,900	44,200	150,000
Buildings (m^2)	29	753	2,277
Building Value (LE 100/m^2)	2,900	75,300	227,700
Equipment Value (LE)	6,000	180,260	808,000
Working Capital	730	14,324	103,300
Total Assets	11,800	299,760	1,185,700
Flow Costs (Per Year):			
Land	290	4,420	15,000
Buildings	292	7,595	22,965
Machinery	705	21,173	94,907
Working Capital	0	0	0
Total	1,287	33,188	132,872

Source: Compiled by the Author

TABLE A3.7

Summary Values for Private Weaving Firms
By Size of Firm
(Egypt, 1979)

	Firm Size			
	Small	Medium	Large	Total
Per Firm Figures:				
Sales/Firm (LE)	19,800	292,500	1,406,250	x
VA/Firm (LE)	8,115	120,607	579,884	x
Yarn Input/Firm (Kg)[1]	6,437	95,095	457,187	x
Cloth Output/Firm (Kg)	5,852	86,450	415,625	x
Industry Figures:				
Number of Firms	130	510	10	650
Sales (LE '000)	2,574	149,175	14,062	165,812
VA (LE '000)	1,055	61,510	5,799	68,363
Yarn Inputs (MT)	836	48,498	4,572	53,906
Cloth Outputs (MT)	761	44,090	4,156	49,007

[1]Output Figures multiplied by 10%

Source: Compiled by the Author

firms with profits in this range pay taxes on their individual return. All the larger firms earned more than LE 4,500, and they paid the maximum corporate tax rate of 32%. These representative budgets obviously do not take into account any special tax avoidance efforts.

Aggregate Sales and Value Added for the Weaving Industry. The picture of the total industry that emerges from these budgets is given in Table A3.7. The most important figures used in Chapter 4 and Appendix 2 -- the quantity of inputs used, sales, and value added -- are shown both on a per firm basis, as taken from these budgets, and are aggregated to an industry level by multiplying the number of firms by the representative value. The industry figures are based on a total number of looms of 14,770, which is about 1,000 looms more than estimated in the published figures (FEI, 1980, p. 141.)

A3.2 Financial Budgets for the Private Ready-made Clothing Industry.

The budgets for the representative small, medium-small, medium, and large firms are given in Tables A3.8 to A3.11. These firms are broken into these divisions to reflect the sizes of firms in used Appendix 1. Each of the categories in the budgets is discussed below.

Output and Sales . The output per firm is first reconciled with the total output figures estimated in Appendix 2 for the private sector RMC producers. They produced 15,915 tons of ready-made garments in 1979, or 63 million pieces, which were valued at LE 138 million (FEI, 1980, p. 165.) The average piece therefore was 250 grams and was valued at LE 2.13. Of course, these averages cover wide variety of products, fashions and values, so they are meaningful only in a limited way, but are nonetheless useful. Interestingly, the average piece corresponds to a

shirt or blouse because they require about 2.5 meters of cloth, which weigh 100 to 125 grams per meter and are valued from LE 2 to 6. For convenience, the image of the average firm as a shirt maker is used to construct these budgets.

There were about 26,000 workers in the private sector ready-made garment industry, so each worker produced 2,080 garments per year, or about 7.2 garments on each of 290 days a year. Since some workers are not directly engaged in production, this figure again approximates a rough level of productivity expected in shirt manufacturing. If 80% of the workers are in production, the production rises to 2,600 pieces per year per production worker, or about 9 garments per day, a believable output figure for shirt manufacturing given the low productivity mentioned in both interviews and consultants' reports (Werner International, 1976, p. 118-143.)

In these budgets it is assumed that each worker averages 8 garments a day, so the output quantities are slightly larger than the FEI estimates. Since there is probably some undercounting of smaller firms, these budgets should generate fairly reasonable aggregates. The prices are also increased slightly to LE 2.25, again because there is undercounting and the value of the undercounted amount may be above average. (The estimate in the FEI Yearbook used as the starting point was clearly a guess -- a suspiciously round number was used for the values in the private sector.)

For each of the representative firm-groups the total sales are calculated by multiplying the number of workers, their average productivity per day, the number of days, and the average price received per piece. The number of pieces produced per day was eight for all sizes except the smallest, where it was seven.

TABLE A3.8

Financial Budgets for Small Ready-made Garment Firm

Egypt, 1979

(Egyptian Pounds)

Category and Description of Sales or Costs	Value
(1) SALES (LE 2.25 x 7 pieces x 290 days x 3 workers)	13,703
(2) INTERMED.: Cloth (LE .50/m^2 x 6090 pieces x 2.6m^2)	7,917
Other Raw Materials (LE .25 x 6090 pieces)	1,523
(3) WAGES (3 workers x LE 50 x 12 months)	1,800
(4) UTILITIES (18 sq. meters x LE .5 x 12 months)	108
(5) INTEREST (LE 9,440/12 x .5 mths x 10% per annum)	39
(6) CAPITAL FLOW COST (Calculated in Table A3.12)	617
(7) NET PROFIT BEFORE TAXES	1,699
(8) TAXES (9% of Line (7))	153
(9) NET PROFIT (Line (7) - Line (8))	1,546
(10) VALUE ADDED (Line (1) - Line (2))	4,263

Source: Compiled by the Author

TABLE A3.9

Financial Budgets for Medium-Small Ready-made Garment Firms
Egypt, 1979

(Egyptian Pounds)

Category and Description of Sales or Costs	Value
(1) SALES (LE 2.25 x 8 pieces x 290 days x 25 workers)	130,500
(2) INTERMED.: Cloth (LE .50/m^2 x 58000 pieces x 2.5m^2)	72,500
Other Raw Materials (LE .25 x 58000 pieces)	14,500
(3) WAGES (25 workers x LE 50 x 12 months)	15,000
(4) UTILITIES (150 sq. meters x LE .5 x 12 months)	900
(5) INTEREST (LE 87000/12 x 1.0 mths x 10% per annum)	725
(6) CAPITAL FLOW COST (Calculated in Table A3.12)	7118
(7) NET PROFIT BEFORE TAXES	19,757
(8) TAXES (32% of Line (7))	6,322
(9) NET PROFIT (Line (7) - Line (8))	13,435
(10) VALUE ADDED (Line (1) - Line (2))	43,500

Source: Compiled by the Author

TABLE A3.10

Financial Budgets for Medium Ready-made Garment Firms
Egypt, 1979

(Egyptian Pounds)

Category and Description of Sales or Costs	Value
(1) SALES (LE 2.25 x 8 pieces x 290 days x 75 workers)	391,500
(2) INTERMED.: Cloth (LE .45/m^2 x 174000 pieces x 2.5m^2)	195,750
Other Raw Materials (LE .25 x 174000 pieces)	43,500
(3) WAGES (75 workers x LE 50 x 12 months)	45,000
(4) UTILITIES (450 sq. meters x LE .5 x 12 months)	2,700
(5) INTEREST (LE 239,250/12 x 1.0 mths x 10% per annum)	1,994
(6) CAPITAL FLOW COST (Calculated in Table A3.12)	26,283
(7) NET PROFIT BEFORE TAXES	76,273
(8) TAXES (32% of Line (7))	24,407
(9) NET PROFIT (Line (7) - Line (8))	51,866
(10) VALUE ADDED (Line (1) - Line (2))	152,250

Source: Compiled by the Author

Intermediates. The main intermediate good was cloth, but additionally buttons, zippers, and labels are required to finish the garment. The cloth costs are estimated by multiplying the number of pieces produced, the meters of cloth required per piece, and the cost per meter of cloth. The number of pieces was calculated along with the output figures. The amount of cloth required is based on the number of grams per piece. The average weight per meter of all cloth in Egypt was 133 grams, so a piece of 250 grams would have 1.88 meters in it. However, shirting material is lighter, weighing about 80 grams a meter, according to Arthur D. Little estimates (Arthur D. Little, Inc., 1982, p. 260.) The average piece of ready-made clothing would then have about 3.125 meters, but this is too much for a shirt, which appeared to require about 2.4 to 2.8 meters. Assuming economies of size in the use of material, the small firms are estimated to use 2.6 meters per piece, the next two larger categories are at 2.5 meters per piece, and the largest firms, who are presumed to be more efficient cloth cutters, use only 2.4 meters per piece. In the aggregate there may be fewer pieces with greater weight, but as a summary the shirtmaker model seems to fit the diverse data well.

The average price per meter of cloth from weavers was LE .45 per meter, which is used as the price of cloth for the larger firms who buy directly from weavers. The smaller firms are assumed to go through wholesalers and pay an additional 5 piasters, or LE .50 per meter including wholesaling costs and somewhat higher costs associated with smaller orders.

The other raw materials are mostly the finishing pieces required, such as buttons, labels, and zippers. Prices for these accessory inputs average about LE 15,.05, and .20 respectively, presumably with discounts for bulk purchases. Not all clothing articles have all of these included,

so the figure was put at LE .25 per piece.

Labor Costs. Labor costs are calculated by using the wage rate per laborer per month times the number of laborers, and then times twelve to get the annual figure. The rationale for the wage rate is similar to that for the weaving wages. Larger firms appear to pay their production workers less than in medium sized firms, but there are more administrative personnel in larger firms, who may receive higher wages. No adjustment is therefore made based on the size of firm.

Miscellaneous Costs. Utilities are paid based on the square footage of the firm. The initial average per square meter was derived from data in the Phase II sample. The interest on inventory is calculated as the monthly raw material and accessories costs multiplied by a ten percent interest rate. The days on hand (DOH) of inventory is assumed to differ for smaller and larger firms in that smaller firms simply go to the wholesalers to get inputs as they need them and have fewer DOH than do larger firms. Furthermore, because larger orders and thus earlier lead times are required by larger firms they may, in order to reduce the possibility of missing seasonal demand peaks, take delivery of orders early to make sure that the correct quality and quantity is on hand. Thus inventory as a proportion of total raw materials costs is assumed to increase with the size of the firm. The final miscellaneous cost is for taxes, which are calculated according to the schedule presented earlier.

Capital Costs. The fixed assets for each firm and the associated flow costs are shown in Table A3.12. The procedure is similar to that used for weaving firms except that the machinery complements are not specifed in as much detail because they come in packages that are most easily estimated using costs per worker. The space required by a representative

TABLE A3.11

Financial Budgets for Large Ready-made Garment Firms
Egypt, 1979

(Egyptian Pounds)

Category and Description of Sales or Costs	Value
(1) SALES (LE 2.25 x 8 pieces x 290 days x 150 workers)	783,000
(2) INTERMED.: Cloth (LE .45/m^2 x 348000 pieces x 2.4m^2)	375,840
Other Raw Materials (LE .25 x 348000 pieces)	87,000
(3) WAGES (150 workers x LE 50 x 12 months)	90,000
(4) UTILITIES (900 sq. meters x LE .5 x 12 months)	5,400
(5) INTEREST (LE 462,840/12 x 1.5 mths x 10% per annum)	5,786
(6) CAPITAL FLOW COST (Calculated in Table A3.12)	67,349
(7) NET PROFIT BEFORE TAXES	151,625
(8) TAXES (32% of Line (7))	48,520
(9) NET PROFIT (Line (7) - Line (8))	103,105
(10) VALUE ADDED (Line (1) - Line (2))	320,160

Source: Compiled by the Author

TABLE A3.12

Land, Building, and Machinery Requirements
for Private Garment Making Firms
(Egypt, 1979)

Equipment:	Firm Size: Small	Med/Sm.	Medium	Large
Space Required: ($5m^2$/worker + 20%)	18	150	450	900
Land Costs (LE 100/m^2)	1,800	15,000	45,000	90,000
Building Costs: (LE 100/m^2)	1,800	15,000	45,000	90,000
Machinery Costs:*	1,950	31,250	131,250	375,000
Working Capital	393	7,250	19,936	58,000
Total Assets	5,943	68,500	241,186	613,000
Flow Costs (Per Year):				
Land	180	1,500	4,500	9,000
Buildings	182	1,513	4,539	9,077
Machinery	256	4,109	17,256	49,303
Working Capital	0	0	0	0
Total Flow Costs	618	7,122	26,295	67,380

* Based on Costs per worker: Small, LE 650; Med/SM., LE 1250
Medium, LE 1750; Large, LE 2500

Source: Compiled by the Author

TABLE A3.13

Summary Values for Private Garment Making Firms By Size of Firm

(Egypt, 1979)

	Firm Size				
	Small	Med/Sm.	Medium	Large	Total
Per Firm Figures:					
Sales/Firm (LE)	13,703	130,500	391,500	783,000	x
VA/Firm (LE)	4,263	43,500	152,250	320,160	x
Output/Firm (Kg)	2,100	19,300	57,907	111,107	x
Industry Figures:					
Number of Firms	1,222	150	75	75	1,522
Sales (LE '000)	16,745	19,575	29,363	58,725	124,408
VA (LE '000)	5,209	6,525	11,419	24,012	47,165
Output (MT)	2,566	2,895	4,343	8,333	18,137

Source: Compiled by the Author

firm with a specified number of workers is simply estimated as 5 square meters per worker, with an additional 20 percent added to cover offices and storage facilities. These numbers are based on inspection of firms that ranged from 8 employees to 260 employees.

The land and building costs are calculated using the estimated space requirements and the same coefficients used in the weaving analysis -- LE 100 per square meter for both land and building costs. There may be economies of size occurring in the space required per worker, and there may be more stringent regulatory requirements for different sized firms, but no corrections were made for these possible differences.

The machinery complement was estimated assuming increasing capital values per worker with the size of firm. These were based on estimates from certain empirical studies, discussions with many firms, and

observations of the machinery in different sized firms during those interviews. Generally the smallest firms had several industrial quality sewing machines, and maybe a specialized overhook machine or a buttonholing machine. Miscellaneous tools would be the only other equipment. They differ from the tailors and dressmakers only in that they may have higher quality sewing machines. There are probably too many sewing machines and not enough firms with specialized machinery if this firm-group is viewed in the aggregate.

The complements become more sophisticated as the size of firm increases. Even firms with twenty-five employees have sophisticated cutting equipment, and some expensive ironing, buttonholing and overhook machines. Tables, carts and other extra equipment are also in evidence. However, as noted in Chapter 4, these producers are still mainly in the batch mode. The larger firms use line operations with even more specialized equipment and often have pressing and folding equipment and special packaging machines as well. Thus the capital per worker goes up fairly constantly throughout this range of firms. The particular estimates here used have been checked with textile specialists at Colorado State University, and the cost of most pieces of machinery were known from discussions with suppliers in Egypt as well.

The last part of Table A3.12 contains the flow cost estimates created by the same methods used in the weaving budgets. The life of the looms in weaving was was assumed to be 20 years, but it is only 15 years for RMC equipment.

Aggregate Sales and Value Added for the Private RMC Industry. The aggregation to the industry level from the budgets in this section is contained in Table A3.13, which shows the sales, value added, and the tons of inputs used per firm. Further comments regarding these figures

are given in Chapters 3 and 4. Exports of 1,204 MT are ignored because if distributed through the different firm-groups they would disappear in rounding.

A3.3 Financial Budgets for the Private Sector Wholesaling Industry

In Appendix 2, the total sales in the wholesaling industry were estimated at approximately LE 44.6 million, made by ten large firms and 540 small firms. Several wholesalers and weavers indicated that the ten larger firms had at least LE 1 million in sales. Given that the firms interviewed seemed to be larger than that estimate, an average sales figure of LE 2.0 million per large firm does not seem unreasonable. The remaining 540 small firms would share the LE 24.2 million in sales not made by the larger firms, so each firm would sell LE 45,000 of cloth per year. These average sales are the starting point for the calculations of the budgets, shown in Tables A3.14 and A3.15.

It is assumed that each firm marks up its inputs by 6%, the allowed mark up authorized by the Industrial Control Board, and so sales are divided by 1.06 to derive the cost of intermediate goods. Wages are the same LE 50 assumed in all other budgets in this Appendix. The monthly wages are then multiplied by the number of employees and by 12 months to get annual wages. Utilities and the capital flow costs are also calculated as in the earlier budgets, and are based on space requirements of 15 square meters for small wholesalers and 200 square meters for large ones.

The interest on working capital is assumed to be one quarter of the total value of the intermediates. This assumption is fairly critical for these budgets, because of the high costs of intermediates.

TABLE A3.14

Financial Budgets for Small Wholesaling Firms
Egypt, 1979

(Egyptian Pounds)

Category and Description of Sales or Costs	Value	
	Average Sales	High Sales
(1) SALES (See Text)	45,000	90,000
(2) INTERMEDIATES: Cloth (Sales/1.06)	42,453	84,906
(3) WAGES (2 workers x LE 50 x 12 months)	1,200	1,200
(4) UTILITIES (15 sq. meters x LE .5 x 12 months)	90	90
(5) INTEREST (Intermediates x .25 x 10% per annum)	1,061	2,123
(6) CAPITAL FLOW COST*	302	302
(7) OTHER	200	200
(7) NET PROFIT BEFORE TAXES	-306	1,179
(8) TAXES (9% of Line (8))	-	106
(9) NET PROFIT (Line (7) - Line (8))	-306	1,073
(10) VALUE ADDED (Line (1) - Line (2))	2,547	5,094

*Fixed assets are LE 1,500 for Land, and LE 1,500 for Buildings

Source: Compiled by the Author

TABLE A3.15

Financial Budgets for Large Wholesaling Firms
Egypt, 1979

(Egyptian Pounds)

Category and Description of Sales or Costs	Value
(1) SALES (See Text)	2,000,000
(2) INTERMEDIATES: Cloth (Sales/1.06)	1,886,792
(3) WAGES (30 workers x LE 50 x 12 months)	18,000
(4) UTILITIES (200 sq. meters x LE .5 x 12 months)	1,200
(5) INTEREST (LE 1,886,792 x .25 x 10% per annum)	47,170
(6) CAPITAL FLOW COST*	4,017
(7) OTHER	10,000
(7) NET PROFIT BEFORE TAXES	32,821
(8) TAXES (32% of Line (8))	10,503
(9) NET PROFIT (Line (7) - Line (8))	22,318
(10) VALUE ADDED (Line (1) - Line (2))	113,208

* Fixed assets are LE 20,000 for Land, and LE 20,000 for Buildings

Source: Compiled by the Author

The firms are probably not paying the total interest cost because they have increased equity over time, so this category is thus in part an opportunity cost. An additional category, "Other", is included to reflect the costs of packaging, paperwork, and other miscellaneous expenses that might be significant given the volume handled. The entries are simply guesses.

The major problem with these budgets is that the small mark up requires a significant sales value to get any positive profit. For the small wholesalers, this problem is illustrated by including two different levels of sales. The first budget reconciles with the macro figures in Appendix 2, and the second shows twice the sales as assumed in the first budget. There must be positive profits for the firms to remain in business, so either there are fewer small wholesalers or they sell more product through wholesalers than is estimated in the literature (Werner International, 1976, p. 40.)

A3.4 Financial Budgets for The Private Sector Retailing Industry.

These budgets are calculated in a manner similar to the wholesaling budgets in Table A3.16 and A3.17. The total sales of the private sector retailing industry was LE 379.5 million in 1979 (Appendix 2.) This sales value was produced by three types of firms -- itinerant retailers, and small and medium retailing firms -- with employment of one, two, and eight employees each. Total employment in the 325 large firms was therefore 2,600, while in the 7,800 small firms it was 23,400. The itinerant retailers were all assumed to work individually, and there were 9,000 of them.

To derive the sales figures for each of these firm types, first

the sales per employee was estimated, given the aggregate sales of the industry. That figure was LE 10,843 per year. For the itinerant retailers, it was simply assumed that they earned about LE 1,500 per year -- a figure close to the tailors' earnings -- and that this income corresponded to a mark up of 25% above their costs of material. Thus, each of these retailers sold LE 6,000 of cloth or clothing during 1979, and in the aggregate this amounted to LE 54 million. The difference between this amount and the average sales per employee for the industry was estimated to be captured by the larger firms, so some economies of size are assumed to exist. The total sales by large firms was as follows:

```
      2600 workers * LE 10843/worker    =  LE 28.2 million
+ (LE 10843 - LE 6000)* 9000 workers =  LE 43.6 million
                                Total  =  LE 71.8 million
```

The first line shows what the large firms would have earned had they sold at the average rate per employee. The second line shows the additional revenues attributed to them that, at the average, would have gone to itinerant retailers. The per firm sales are thus LE 220,923 for the largest retailers. For the small retailer, the sales are the average per employee, LE 10,843, times the number of employees, 3, or LE 32,529 per year per firm.

The remaining categories are all calculated as in the wholesaling industries, except that intermediates were estimated using a different mark up figure of 20.25%. This was the weighted average of the mark ups assigned to cloth and clothing in Appendix 2. Thus, the average firms considered here sold some cloth purchased from weavers, some from wholesalers, and also sold some ready-made clothes.

TABLE A3.16

Financial Budgets for Small Retailing Firms
Egypt, 1979

(Egyptian Pounds)

Category and Description of Sales or Costs	Value
(1) SALES (See Text)	32,529
(2) INTERMEDIATES: Cloth/Clothing (LE 32,529/1.2025)	27,051
(3) WAGES (3 workers x LE 50 x 12 months)	1,800
(4) UTILITIES (25 sq. meters x LE .5 x 12 months)	150
(5) INTEREST (LE 27,051 x .25 years x 10% per annum)	676
(6) CAPITAL FLOW COST*	901
(7) OTHER	500
(7) NET PROFIT BEFORE TAXES	1,451
(8) TAXES (9% of Line (8))	131
(9) NET PROFIT (Line (7) - Line (8))	1,320
(10) VALUE ADDED (Line (1) - Line (2))	5,478

* Fixed assets are LE 7,500 for Land (15 m^2), and LE 1,500 for Buildings

Source: Compiled by the Author

TABLE A3.17

Financial Budgets for Medium Retailing Firms
Egypt, 1979

(Egyptian Pounds)

Category and Description of Sales or Costs	Value
(1) SALES (See Text)	220,923
(2) INTERMEDIATES:Cloth/Clothing (LE 220,923/1.2025)	183,720
(3) WAGES (8 workers x LE 50 x 12 months)	4,800
(4) UTILITIES (50 sq. meters x LE .5 x 12 months)	300
(5) INTEREST (LE 183,720 x .25 years x 10% per annum)	4,593
(6) CAPITAL FLOW COST*	6,009
(7) OTHER	2,000
(7) NET PROFIT BEFORE TAXES	19,501
(8) TAXES (32% of Line (8))	6,240
(9) NET PROFIT (Line (7) - Line (8))	13,261
(10) VALUE ADDED (Line (1) - Line (2))	37,203

* Fixed assets are LE 50,000 for Land (50 m^2), and LE 10,000 for Buildings

Source: Compiled by the Author

The space required did not increase directly with size, thus showing increased sales per worker in large establishments. Most of the large establishments were well-located, and this had a greater influence on the sales per worker than did absolute size of the establishment.

Aggregate Sales and Value Added for the Private Retailing Industry.

The aggregate figures for the private retailing industry, and its component firm-groups, are given in Table A3.18. The sales and value added figures are drawn directly from the earlier tables. The figures for the quantities sold through each of the firm-groups are taken from Appendix 2, Table A2.7. The itinerant retailers are assumed to sell only cloth. Their tonnage of output is therefore based on the per unit cost of cloth only, while the tonnage of the fixed location retailers is based on a mixture of KRMC, WRMC, and cloth sales.

A3.5 Financial Budgets for Tailors and Dressmakers.

The budgets for tailors and dressmakers are calculated in Table A3.19. They are estimated for both rural and urban producers. The data used is taken from the MSU Phase II survey in Kalyubiya, and was described in Appendix 2, Table A2.9. The labor costs only include payments to hired laborers, and not the value of unpaid family labor. Capital flow costs are drawn from calculations done in Davies, 1984, and do not reflect adjustments for rural and urban firms. The adjustments were not seen to have much of an impact, since the capital figure is so

low. A slightly different sample was used for rent and some overhead payments because these figures are drawn from a different questionnaire. This only involves several firms and does not seem to be a very important indiscretion.

TABLE A3.18

Summary Values for Private Retailing Firms
By Size of Firm

(Egypt, 1979)

	.....Firm Size.....			
	Small	Medium	Itinerant	Total
Per Firm Figures:				
Sales/Firm (LE)	32,529	220,923	6,000	x
VA/Firm (LE)	5,478	37,203	1,500	x
Output/firm (KG)	6,600	45,742	1,419	
Industry Figures:				
Number of Firms	7,800	325	9,000	17,125
Sales ('000 LE)	253,726	71,800	54,000	379,526
VA ('000 LE)	42,728	12,091	13,500	68,319
Outputs (MT)	51,480	14,866	12,770	79,116

Source: Compiled by the Author

TABLE A3.19

Financial Budgets for Tailors and Dressmakers
By Rural and Urban Producers

(Egypt, 1979)

	.....Rural.....		.....Urban.....	
	Tailors	Dress-makers	Tailors	Dress-makers
Sales	889	375	2,147	912
Inputs:				
Intermediates	243	97	292	92
Wages	23	11	384	109
Rent	27	3	62	9
Capital Cost	25	27	25	27
Total Costs	318	138	763	237
Net Return To Family Labor	571	237	1,384	675
Taxes	-	-	129	-
Net Return to Family Labor After Taxes	571	237	1,259	675

Source: Compiled by the Author

APPENDIX 4

THE CALCULATION OF ECONOMIC BUDGETS FOR FIRMS IN THE TEXTILE SUBSECTOR IN EGYPT

An important set of calculations, converting the financial budgets from Chapter 4 into economic budgets, is done in this Appendix. First the methodology used to make the conversions is presented and then the converted budgets for each of the firm-groups are given. Some conclusions regarding the adequacy of the methodology and the validity of the results are discussed at the end of the Appendix.

A4.1 Converting Financial Values to Economic Values

Egypt is a country which has a vast number of conflicting policies. Very high tariff barriers are found for products that are simultaneously subsidized. Many of the factors of production are also regulated. The housing market is subject to a variety of rent controls in the face of tremendous scarcity of land. It is a formidable problem to try to untangle this plethora of policies to try to understand what the "true" economic prices are, and therefore what activities are productive. Fortunately, in a comprehensive effort, the World Bank did just that exercise (World Bank, 1983). Since that effort is much better than anything that can be accomplished here, it is used without amendment.

The approach used by the World Bank was to estimate accounting

ratios so different product and distribution categories could be adjusted to their shadow prices when the relevant market prices are known. For instance, an accounting ratio of 2.0 would imply that the shadow price of the product, say rationed cloth, is twice the market price within Egypt. This would indicate that the prices are effectively being subsidized relative to the world market price. Alternatively, a ratio of .5 would imply that the product is valued in the local market at twice its value on the world market. Thus, it is being protected by some kinds of policies.

The biggest problem is that there exists a wide variance in the accounting ratios even within one broad commodity. The value of cotton yarn is 1.468 times its local price, but synthetic yarn's value is .65 times the local market price. Therefore some aggregation from individual product lines needs to be done to determine an "average" rate to be used for the budgets created here. In Appendix 2, Table A2.2, the precise amounts of the different commodities used for yarn and textiles were computed, so the relative proportions used in the system are known. Furthermore, it is also assumed that all firms use these materials in this same average proportion, and that therefore, it is possible to give them the same average accounting ratio.

This adjustment is done in Table A4.1 for the three major products in the textile subsector -- yarn, cloth, and clothing. In that table each of the specific products is listed with their accounting ratios and their proportion of output.

In the final column, the weighted contribution of each of these products is given. The sum of those weights, shown in the row for "Wtd. Ave." for each product, is the weighted average accounting ratio used.

TABLE A4.1

Calculation of Accounting Ratios for Textile Products for Use in Economic Budgets

General Category	Specific Product	Accounting Ratio	% of Output in Sector	Weight
Yarn	Cotton	1.468	81	1.19
	Wool	1.000	8	.08
	Synthetics	.650	11	.07
Yarn Wtd. Ave.	-	-	100	1.34
Cloth	Rationed	2.220	37	.82
	Other Cloth	1.085	23	.25
	Wool Blends	1.000	9	.09
	Syn. Blends	.869	21	.18
	All Wool	1.000	4	.04
	All Synthetic	.670	6	.04
Cloth Wtd. Ave.	-	-	100	1.42
Clothing	Export Grade	1.625	50	.81
	Medium Grade	.421	25	.11
	Poor Grade	.611	25	.15
Clothing Wtd. Ave.	-	-	100	1.07

Source: Compiled by the Author from World Bank, 1983.

The exact proportions of export, medium, and poor grade clothing was not known and has been assumed. The assumption was made to try to not bias the prices against RMC products.

Other accounting ratios are also needed to create the economic budgets. They are listed in Table A4.2 and were, for the most part, taken directly from World Bank study. There was no figure given for land, so the same value that is used for buildings was applied to land. This was done to show some scarcity value in land relative to the current market in Egypt. The labor value used was an average of rural and urban unskilled values. A skilled labor value of 1.07 exists, but it was not used because it was not clear how much skilled labor to include.

TABLE A4.2

Other Accounting Ratios Used in the Calculation of Economic Budgets

Category	Accounting Ratio
Land	1.650
Buildings	1.650
Machinery	.965
Labor	.700
Utilities	3.000
Interest	1.000
Taxes	0.000
Retail Distribution	.711
Wholesale Distribution	.798
Sewing Thread	1.335
Lace Ribbon	.790
Tailored Shirts	.750

Source: Compiled by the Author from World Bank, 1983.

Using that value would raise the value attached to labor somewhat, which would probably be higher for the larger firms, but would not affect the main conclusions much, so it is left out. Also, the entire Utilities

category has been approximated by the value for electricity, since that may be the largest component and no other values were given in the World Bank study.

The calculations used for the tailors and dressmakers were different and are worth some discussion. The only tailored product mentioned in the accounting ratios was tailored shirts, at a value of .75. This figure was used to adjust all of the sales values of the tailors and dressmakers. The cost of intermediates was hard to determine because it is a miscellaneous group of products. Two of these, sewing thread and lace ribbon, are given as examples to show that there is a wide variance. Since some seem to be high and others low, the accounting ratio for intermediates is left at 1.00 for tailors and dressmakers.

A4.2 The Economic Budgets for the Private Weaving Firms

The conversion to economic budgets for the weaving firms is shown in Table A4.3. Weaving is found to be a much more profitable activity economically than financially, mainly because the output, cloth, is more highly valued in terms of border prices than is the major input, yarn. The value added thus widens when converted to economic prices, and most of the other inputs that are significant, such as wages and capital costs, are either decreased or remain the same, so that economic profits are large.

The validity of this approach depends critically on the assumption that all of the output of all of the firms in the industry could be sold at these accounting prices. It is also a question about how heavily to weight the rationed cloth production when the bulk of it is produced by public sector firms. The economic value of cloth is high because

TABLE A4.3

Economic Budgets for Private Weaving Firms
By Size of Firm

Egypt, 1979

(Egyptian Pounds)

Cost Category	Firm Size Small	Medium	Large
SALES	28,116	415,350	1,996,875
INPUTS:			
-Intermediates	15,658	230,337	1,107,384
-Wages	2,520	32,760	157,500
-Utilities	540	7,956	40,986
-Interest	73	1,432	10,330
-Capital Cost	1,641	32,964	154,227
TOTAL COSTS	20,432	305,449	1,470,427
NET PROFIT BEFORE TAXES	7,684	109,901	526,448
TAXES	0	0	0
NET PROFIT	7,691	102,708	526,543

Source: Converted from the Financial Budgets in Appendix 3

of the rationed cloth, and not including it in the private sector output would reduce the economic profits of the private sector.

A4.3 The Economic Budgets for the Private Wholesaling Firms

The economic budgets for the private wholesalers are given in Table A4.4. In contrast to the results of the economic analysis for the weaving firms, the wholesaling industries operate with economic losses. In the case of the smaller wholesalers, there are losses both financially and economically. The main reason is that the output -- wholesaling distribution -- is seen to be protected relative to its value internationally, while its main input, cloth has a higher value internationally. It produces a non-traded good that consumes tradable goods that supposedly have a higher opportunity cost in trade.

The accounting ratio for wholesale distribution actually relates only to the mark up, not to the gross sales value. An alternative procedure, which would reduce the economic losses, would be to simply use the calculation of the mark up as their sales, and reduce it by the wholesale distribution accounting ratio. The costs would then exclude the intermediates. Whatever the adjustments, it is clear that distribution activities pose some interesting problems for converting to economic analysis.

Again, the validity of evaluating the whole industry at these economic prices is a serious limitation to the results of the economic analysis. Also, the wholesalers play a role in the "system," which has a higher value than is reflected in the economic prices. Its coordination and allocation role is greater then might be expected by the results of this analysis.

TABLE A4.4

Economic Budgets for Wholesaling Firms
By Size of Firms

Egypt, 1979

(Egyptian Pounds)

Item	Small (LE)	Large (LE)
SALES	35,910	1,596,000
INPUTS:		
- Intermediates	60,283	2,679,245
- Wages	840	12,600
- Utilities	270	3,600
- Interest	1,061	47,170
- Capital Cost	498	6,628
- Others	200	10,000
TOTAL COST	63,152	2,759,243
NET PROFIT BEFORE TAXES	- 27,242	- 1,163,243
TAXES	0	0
NET PROFIT	- 27,242	- 1,163,243

Source: Converted from the Financial Budgets in Appendix 3

A4.4 The Economic Budgets for the Private RMC Firms

The economic budgets for the RMC industry are given in Table A4.5. There are economic losses for all of the firm-groups in this industry. Probably the reason that the outcome is this way is that the products, clothing, are only slightly under-priced and their inputs used are quite under-priced. The outcome here shows some of the limitations of using the average ratios for all products and channels.

The RMC industry probably uses a higher proportion of protected rather than subsidized cloth (most likely no rationed cloth is used), and in these budgets in it being penalized for using subsidized cloth, while it in fact does not. With this adjustment all of the firms might show economic profits.

A4.5 The Economic Budgets for Private Retailing Firms

The economic budgets for the retailing industries are shown in Table A4.6. They show large losses because, as in the wholesaling budgets, their output, retailing distribution, has a shadow price that is less than the market price, while their major inputs of cloth and clothing have shadow prices that are greater than their market prices because of the prevalence of subsidized cloth.

Since the retailers are not allowed to mark up the rationed cloth, perhaps two budgets should be shown, one for rationed and one for non-rationed cloth. (See Chapter 6, for details on the rationing program and the private sector retailers). A similar adjustment showing only the mark up might be appropriate here as well.

TABLE A4.5

Economic Budgets for Ready Made Clothing Firms

By Size of Firm

Egypt, 1979

(Egyptian Pounds (LE))

	Small (LE)	Med-Small (LE)	Medium (LE)	Large (LE)
SALES	14,662	139,635	418,905	837,810
INPUTS				
- Intermediates	13,405	123,540	416,415	657,233
- Wages	1,260	10,500	31,500	81,900
- Utilities	324	2,700	8,100	16,200
- Interest	39	725	1,994	5,786
- Capital Cost	844	8,837	31,566	77,404
TOTAL COSTS	15,872	146,302	498,575	819,623
NET PROFIT BEFOR TAXES	- 1,210	- 6,667	- 70,670	18,187
TAXES	0	0	0	0
NET PROFIT	- 1,210	- 6,667	- 70,670	18,187

Source: Converted from the Financial Budgets in Appendix 3

TABLE A4.6

Economic Budgets for Retailing Firms
By Size of Firms

Egypt, 1979

(Egyptian Pounds)

Item	Small (LE)	Large (LE)
SALES	23,128	157,076
INPUTS:		
- Intermediates[1]	35,166	238,836
- Wages	1,260	3,360
- Utilities	450	900
- Interest	676	4,593
- Capital Cost	1,487	9,915
- Others	500	2,200
TOTAL COST	39,539	259,804
NET PROFIT BEFORE TAXES	- 16,411	- 102,718
TAXES	0	0
NET PROFIT	- 16,411	- 102,718

[1] Assumes 65 percent of Intermediate is Cloth and 35 percent representing a 1.3 ratio. Based on Appendix 2, table A2.7

Source: Converted from the Financial Budgets in Appendix 3

A4.6 The Economic Budgets for Tailors and Dressmakers

The economic budgets for the tailors and dressmakers are contained in Table A4.7. All of the returns to family labor decrease but are still positive. Through the application of the accounting ratios, the value of the output decreased, as did the wage figures, resulting in the drop in profits. It is appropriate, under the usual assumptions of economic analysis, that unskilled labor would have a lower shadow price than its market price in a developing country. This is essentially what the effect of the lower return to family labor indicates. What does not come through strong enough in any of these budgets is the major benefit that tailors and dressmakers provide for the country by using very low opportunity cost space to accomplish their activities. Their mode of operation saves both production and retailing space in a country that is quickly running out of arable land to urbanization.

A4.7 Conclusions

There are many firm-groups that have negative economic profits, and a number of qualifications are warranted. First, the accounting ratios assume that a marginal quantity could be exported and the shadow price is for that unit. If the entire sector is supposed to export its products, then international markets in which there is inelastic demand will be subject to large price declines, so the marginal rate is not appropriate. This is likely true for many of the products in this subsector. Secondly, Egypt has been trying actively to export its products, but a combination of quotas and tariffs in the international

TABLE A4.7

Economic Budgets for Tailors and Dressmakers
By Rural and Urban Producers

Egypt, 1979

(Egyptian Pounds)

Cost Category	Rural		Urban	
	Tailors	Dress-makers	Tailors	Dress-makers
SALES	667	281	1,610	684
INPUTS:				
- Intermediates	243	97	292	92
- Wages	16	8	269	76
- Rent	45	5	102	15
- Capital Cost	24	26	24	26
TOTAL COST	328	136	687	209
NET RETURN TO FAMILY LABOR	339	145	923	475
TAXES	0	0	0	0
NET RETURN	339	145	923	475

Source: Converted from the Financial Budgets in Appendix 3

market and poor quality production means that the marginal unit may not be exportable. In this case, there should be no adjustment because what is exportable has been taken into account and the rest is appropriately valued at local market prices. Thirdly, the accounting ratios do not give full weight to the "systems" point of view taken here. Wholesalers are important actors in the system, and if the system is to operate they need to be in it, regardless of the border price of their activities. Economic efficiency is not solely an intra-firm concern. Thus, some of the qualitative dimensions of a well-functioning system are ignored.

BIBLIOGRAPHY

BIBLIOGRAPHY

American Apparel Manufacturers Association. 1984. Apparel Manufacturing Strategies. Arlington, Virginia: American Apparel Manufacturers Association.

Anderson, Dennis. 1982. "Small Industry in Developing Countries: A Discussion of Issues." World Development Volume 10, #11.

Arthur D. Little, Inc. 1977. "Evaluation of the Misr-Rayon Co. Proposed Expansion." A Study for USAID/Cairo. Cambridge: Arthur D. Little, Inc.

Arthur D. Little, Inc. 1982. "Review and Evaluation of Small-Scale Enterprises in Egypt." USAID Contract # 263-0078-C-00-1049-00. Cambridge: Arthur D. Little, Inc.

Badr, Mahmoud, et. al. 1982. "Small Scale Enterprises in Egypt: Fayoum and Kalyubiya Governorates Phase I Survey Results ." Michigan State University Rural Development Working Paper No. 23. East Lansing: Michigan State University.

Boomgard, James J., Davies, Stephen P., Haggblade, Steven J., and Mead, Donald C. 1984. "Subsector Analysis: Its Nature, Conduct and Potential Contribution to Small Enterprise Development." Michigan State University International Development Working Paper No. 26. East Lansing: Michigan State University. East Lansing.

Boulding, Kenneth E. 1978. Ecodynamics: A New Theory of Societal Evolution. Sage Publications: Beverly Hills.

Braudel, Fernand. 1981. The Structures of Everyday Life: The Limits of the Possible. New York: Harper and Row.

Bruton, Henry. 1981. "Egypt's Development in the Seventies." Center for Development Economics, Research Memorandum No. 84. Williamstown, Mass.: Williams College.

Caves, Richard E., and Jones, Ronald W. 1977. World Trade and Payments: An Introduction (2nd. Edition.) Little, Brown, Inc.: Boston.

Central Bank of Egypt. 1980. "Cotton Spinning and Weaving Industry in Egypt (1966-1978.)" Economic Review Volume 20, #2. Cairo: Central Bank of Egypt.

Chuta, Enyinna and Liedholm, Carl. 1979. "Rural Non-Farm Employment: A Review of the State of the Art." Michigan State University Rural Development Papers No. 4. East Lansing: Michigan State University.

Checci and Company. 1982. "Enterprise Survey Analysis: A Profile of Artisanal Establishments in Greater Cairo, Alexandria, Assiut and Damietta." Artisan Sector Studies Project (World Bank.) Washington, D.C.: Checci and Co.

Clark, Paul G. 1984. "The Policy Environment for Egyptian Industry." Center for Development Economics, Research Memorandum No. 90. Williamstown, Mass.: Williams College.

Cyert, Richard M,. and March, James G. 1963. A Behavioral Theory of the Firm. Englewood Cliffs, N.J.: Prentice-Hall.

Davies, Stephen P., et. al. 1984. "Small Enterprises in Egypt: A Study of Two Governorates." Michigan State University International Development Working Paper No. 16. East Lansing: Michigan State University.

El Salmy, Ali. 1980. "Public Sector Management: An Analysis of Decision-making and Employment Policies and Practices in Egypt." Employment Opportunities and Equity in Egypt Paper No. 6 (an ILO/UNDP Project.) Geneva: International Labor Office.

El Sokari, Amal. 1982. "Basic Needs, Inflation, and the Poor of Egypt: 1970-1980." Cairo: American University in Cairo Master's Thesis (English.)

French, Ben. 1974. "The Subsector as a Conceptual Framewwork for Guiding and Conducting Research." American Journal of Agricultural Economics Volume 56, #5.

GATT. 1984. "Textiles and Clothing in the World Economy." A Background Study prepared by the GATT Secretariat for the November 1982 Ministerial Meeting. GATT: Geneva.

Georgescu-Roegen, Nicholas. 1971. The Entropy Law and the Economic Process. Cambridge: Harvard University Press.

Gillespie, Roger. 1983. "Business Formation in Egypt." The Middle East Magazine No 125, January.

Goldberg, Ray A. 1968. Agribusiness Coordination: A Systems Approach to the Wheat, Soybean, and Florida Orange Economies. Boston: Harvard University Graduate School of Business Administration.

Gould, Stephen J. 1977. Ever Since Darwin: Reflections in Natural History. New York: W.W.Norton and Co.

Haggblade, Steve. 1984. "The Shebeen Queen or Sorghum Beer in Botswana: The Impact of Factory Brews on a Cottage Industry." East Lansing: Michigan State University Ph.D. Dissertation.

Handoussa, Heba Ahmad. 1980. "Public Sector Employment and Productivity in the Egyptian Economy." Employment Opportunities and Equity in Egypt (An ILO/UNDP Project.) Geneva: International Labor Office.

Hansen, Bent and Radwan, Samir. 1982. Employment Opportunities and Equity in Egypt: Egypt in the 1980s. Geneva: International Labor Office.

Harrison, Kelly, et. al. 1974. Improving Food Marketing Systems in Developing Countrties: Experiences from Latin America. Research Report No. 6, Latin American Studies Center. East Lansing: Michigan State University.

Hicks, J.R. 1985. Methods of Dynamic Economics. Oxford, England: Oxford University Press.

Hirschman, Albert O. 1981. Essays in Trespassing: Economics to Politics and Beyond. Cambridge: Cambridge University Press.

Ikram, Khalid. 1980. Egypt: Economic Management in a Period of Transition (A World Bank Country Report.) Baltimore: Johns Hopkins University Press.

Institute of National Planning (INP.) 1981. "Small Scale Industries and Industrial Development (Applied to the Weaving Industry.)" Translated from the Arabic by Rebab El Abd. Cairo:INP.

International Labor Organization (ILO.) 1983. "Small Scale Weaving." Technical Memorandum No. 4., Technology Series. Geneva:ILO.

Jabber, Paul. 1986. "Egypt's Crisis, America's Dilemna." Foreign Affairs Volume 64, #5.

Jones, Leroy P. 1981. "Improving the Operational Efficiency of Public Industrial Enterprise in Egypt." A Report of the Industrial Strategy Assessment Project for USAID/Cairo. Boston: Boston University.

Kilby, Peter. 1971. Entrepreneurship and Economic Development. New York: The Free Press.

Lall, Sanjaya. 1980. "Vertical Inter-firm Linkages in LDCs: An Empirical Study." Oxford Bulletin of Economics and Statistics Volume 42, #3.

Mabro, Robert. 1974. The Egyptian Economy: 1952-1982. Oxford: Clarendon Press of the Oxford University Press.

Marion, Bruce W. 1976. "Vertical Coordination and Exchange Arrangements: Concepts and Hypotheses." Coordination and Exchange in Agricultural Subsectors, Monograph No. 2, North Central Regional Research Project No. 117.

Mclaughlin, Edward W. 1983. "Buying and Selling Practices in the Fresh Fruit and Vegetable Industry: Implications for Vertical Coordination." East Lansing: Michigan State University Ph.D. Dissertation. 1983.

Mead, Donald C. 1984. "Of Contracts and Subcontracts: Small Firms in Vertically Dis-integrated Production/Distribution Systems in LDC's." World Development Volume 12, #11.

Mighell, Ronald L. and Jones, L.A. 1963. Vertical Coordination in Agriculture (ERS/AER-19.) Washington. D.C.: U.S. Department of Agriculture.

Mohie-Eldin, Amir. 1978. "Taxes and Subsidies." A paper of the Cairo University/Massachusetts Institute of Technology Technological Planning Program. (USAID Development Information Center #DE10 EG-AAB-500.) Cairo: Cairo University.

National Bank of Egypt. Various Issues. Economic Bulletin. Cairo: National Bank of Egypt.

Nelson, Richard R. and Winter, Sidney G. 1982. An Evolutionary Theory of Economic Change. Cambridge: Belknap Press of Harvard University Press.

PADCO. 1982. "The National Urban Policy Study of Egypt." A Report for USAID/Cairo. Washington, D.C.: PADCO.

Page, John. M. 1979. "Small Enterprises in African Development: A Survey." World Bank Staff Working Paper No. 363. Washington. D.C: The World Bank.

Papanek, Gustav. 1982. "Employment: A Crucial Problem for the 1980s." in "Labor Markets and Industry in Egypt: Analysis and Recommendations for Employment-Oriented Growth." A Report of the Indsutrial Stategy Assessment Project USAID-Egypt. Boston: Boston Unviersity.

Parker, John B. and Coyle, James R. 1981. "Urbanization and Agricultural Policy in Egypt." ERS, FAER-169. Washington. D.C.: U.S. Department of Agriculture.

Porter, Michael E. 1980. Competitive Strategy: Techniques for Analyzing Industries and Competitors. New York: The Free Press.

Rosewicz, Barbara. 1986. "Egypt, Wary of Political Unrest, Starts Economic Reform." The Wall Street Journal November 4. New York: Dow-Jones.

Sah, R.K., and Stiglitz, J.E. 1986. "The Architecture of Economic Systems." American Economic Review Volume 76, #4.

Schmitz, Hubert. 1982. "Growth Constraints on Small-scale Manufacturing in Developing Countries: A Critical Review." World Development Volume 10, #6.

Shaffer, James D. 1968. "Changing Orientation of Marketing Research." American Journal of Agricultural Economics. Volume 50, #5.

Shaffer, James D. 1973. "On the Concept of Subsector Studies." American Journal of Agricultural Economics Volume 55, #2.

Shaffer, James D. 1980. "Food Systems Organization and Performance: Towards a Conceptual Framework." American Journal of Agricultural Economics Volume 62, #2.

Shaffer, James D. 1985. "Thinking about Farmer's Cooperatives, Contracts, and Economic Coordination." Unpublished paper. East Lansing: Department of Agricultural Economics, Michigan State University.

Simon, Herbert C. 1983. Reason in Human Affairs. Stanford: Stanford University Press.

Solinger, Jacob. 1980. Apparel Manufacturing Handbook: Analysis, Principles and Practice. New York: Van Nostrand, Reinhold and Co.

Staley, Eugene, and Morse, Richard. 1965. Modern Small Industry for Developing Countries. New York: McGraw-Hill.

USAID, Department of State. 1976. "Project Paper: Egypt: Mehalla Textile Plant" (AID-DLC/P-21B1); Washington, D.C.: USAID.

USAID, Department of State. 1983. "Country Development Strategy Statement: Egypt, Fiscal Year 1985, Annex A." Cairo: USAID.

Trade Chamber. 1979. "A Report Prepared for the President on the Garment Industry and Its Future until the Year 2000." (English Translation by Rebab El-Abd.) Cairo: Trade Chamber.

Trade Chamber. 1982. "A Report on the Popular Textile Programs by the Trade Chamber." (English Translation by Rebab El-Abd.) Cairo:Trade Chamber.

Waterbury, John. 1983. The Egypt of Nasser and Sadat: The Political Economy of Two Regimes. Princeton, N.J.: Princeton University Press.

Werner International Management Consultants. 1976. "Final Report on the Sectoral Survey of the Egyptian Textile Industry." A sutdy for USAID/Cairo. New York: Werner Associates.

White, Lawerence. 1978. "The Evidence on Appropriate Factor Proportions for Manufacturing in Less Developed Countries: A Survey." Economic Development and Cultural Change Volume 27.

Williamson, Oliver E. 1971. "The Vertical Integration of Production: Market Failure Considerations." American Economic Review Volume 61.

Williamson, Oliver E. 1975. Markets and Hierarchies: Analysis and Antitrust Implications. New York: Free Press.

Williamson, Oliver E. 1981. "The Modern Corporation: Origins, Evolution, Attributes." Journal of Economic Literature Volume 19.

World Bank. 1977. Arab Republic of Egypt: Survey of Small Scale Industry Report No. 1818-EGT. Washington. D.C.: World Bank.

World Bank. 1983. "Arab Republic of Egypt: Issues of Trade Strategy and Investment Planning." EMENA, World Bank, Report No. 4136-EGT.

World Bank. 1983b. Unpublished data used for calculations in the "Arab Republic of Egypt: Issues of Trade Strategy and Investment Planning." EMENA, World Bank, Report No. 4136-EGT.

World Bank. 1984. World Development Report. New York: The Oxford University Press.

World Bank. 1986. World Development Report. New York: The Oxford University Press.

MICHIGAN STATE UNIV. LIBRARIES
31293005487529